Project Manual

SickKids RFQ#2526-72-000 SPECT CT Project

The Hospital for Sick Children

Spect CT Room Renovation

Project No. HS1024-0175

01 October 2025

Issued For Tender

NORR

175 Bloor St. East
North Tower, 15th Floor
Toronto, ON
Canada M4W 3R8

T 416 929 0200

norr.com

Project Manual
For
The Hospital for Sick Children
Spect CT Room Renovation

SPECIFICATIONS

Number	Title	Date	Pages
Division 00 – Procurement and Contracting Requirements			
	Title Page		1
00 01 10	Table of Contents	01 Oct 2025	2
00 21 13	Instructions to Bidders		15
---	Listing of Invited Contractors		1
00 41 13	Base Bid Form		3
---	Hazmat Acknowledgement Form		2
00 73 00	Supplementary Conditions to CCDC 2		64
Division 01 - General Requirements			
01 00 00	General Requirements	01 Oct 2025	11
	SickKids Electronic Close-out Guidelines	22 Sep 2021	5
	SickKids TCAT Standard		51
01 25 13	Product Substitution Procedures	01 Oct 2025	4
01 35 33	Infection Control Procedures	01 Oct 2025	5
Division 02 – Existing Conditions			
02 41 19	Selective Demolition	01 Oct 2025	5
Division 05 – Metals			
05 41 00	Structural Metal Stud Framing	01 Oct 2025	8
05 50 00	Metal Fabrications	01 Oct 2025	8
Division 06 – Wood, Plastics and Composites			
06 10 00	Rough Carpentry	01 Oct 2025	3
06 20 00	Finish Carpentry	01 Oct 2025	11
Division 07 - Thermal and Moisture Protection			
07 27 00	Air Barrier Systems	01 Oct 2025	4
07 62 00	Sheet Metal Flashing and Trim	01 Oct 2025	4
07 84 00	Fire Stopping and Smoke Seals	01 Oct 2025	5
07 92 00	Joint Sealants	01 Oct 2025	8
Division 08 - Openings			
08 12 00	Metal Frames	01 Oct 2025	6
08 14 00	Wood Doors	01 Oct 2025	6
08 71 00	Hardware	01 Oct 2025	9
---	Hardware Schedule	01 Oct 2025	12
08 80 00	Glazing	01 Oct 2025	6

Number	Title	Date	Pages
Division 09 - Finishes			
09 06 00	Finishes Schedule	01 Oct 2025	5
09 21 16	Gypsum Board Assemblies	01 Oct 2025	11
09 21 16_23	Gypsum Board Shaft Wall Assemblies	01 Oct 2025	4
09 51 00	Acoustical Ceilings	01 Oct 2025	3
09 65 36	Static Dissipative Vinyl Flooring	01 Oct 2025	4
09 67 23	Resinous Flooring	01 Oct 2025	8
09 91 00	Painting	01 Oct 2025	9
Division 10 - Specialties			
10 26 23	Protective Wall Covering	01 Oct 2025	4
10 28 00	Washroom Accessories	01 Oct 2025	4
Division 13 – Special Construction			
13 49 00	Radiation Protection	01 Oct 2025	6
Mechanical & Electrical Specifications		01 Oct 2025	407
Appendices			
Appendix A1	Procedures for Construction, Renovation & Physical Plant Projects	May 2024	267
Appendix A2	Network Cabling Specifications	15 Nov 2024	48
Appendix A3	StarGuide Final Study Drawings	15 Nov 2024	18
Appendix A4	StarGuide Pre-Installation Manual_PIM_5845893-1EN_3		125

End of Table of Contents

0. RFQ/TENDER TENTATIVE TIMETABLE

RFQ 2526-72-000 Tentative Timetable		
Event	**Date**	**Time (EST)**
SickKids issue date of this RFQ	October 1, 2025	N/A
Mandatory Site Meeting @ 170 Elizabeth Street, SickKids Entrance	October 7, 2025	10:00:00hrs
Bidders Clarification Request (RFI) Deadline (Via Biddingo.com)	October 17, 2025	16:00:00hrs
SickKids deadline to issue RFQ Addenda (“**RFQ Addendum Deadline**”)	October 31, 2025	N/A
BID SUBMISSION DEADLINE www.biddingo.com	November 13, 2025	14:00:00hrs

0.1 SickKids reserves the right, at its sole discretion, at any time prior to the Bid Submission Deadline, to amend any of the foregoing dates/times, via the Addendum process set out in this RFQ.

0.2 All times stated in this RFQ mean local Toronto time (per the Biddingo.com portal). For clarity, Bidders should be aware that Toronto time observes Daylight Savings Time when applicable in a given year.

1. OVERVIEW

1.1 The intent of this bid call is to solicit and receive formal offers to complete the work for the SPECT CT Project for The Hospital for Sick Children (SickKids).

1.2 The work generally includes for the work identified on the drawings and specifications including, but not limited to, the following:

1.2.1 Contractor to provide IPAC hoarding, and negative air remote monitoring, as per drawings and specifications. Infection control hoarding measures are required for all areas of work(s).

1.2.2 Perform abatement scope of work, as per drawings and specifications on first and second floor of the Burton building, as per drawings and specifications.

1.2.3 Perform Demolition of existing offices 2137, 2138, 2140, 2141, 2142, 2143, 2144 to allow for the creation of a new mechanical room 2137, Control Room 2141, and Scan Room 2140.

1.2.4 Complete construction of new Mechanical Room 2137, Control Room 2141, and Scan Room 2140, as well as work within all other areas, as per drawings and specifications.

1.2.5 Complete all work(s) necessary to prepare the SPECT CT Scan Room (2140) to receive the CT, from interior of the campus.

2. APPLICATION OF INSTRUCTIONS

2.1 These instructions apply to, and govern the submission of, bids for RFQ No. RFQ 2526-72-000

2.2 Bids signed, dated and otherwise fully executed will be received by the *Owner* before 14:00:00 hrs local time on November 13, 2025.

3. COMPLIANCE

3.1 The bidder acknowledges that by submitting a compliant bid, it has accepted an offer by the *Owner* to enter into a "bid contract" for the evaluation of bids and the award of the *Contract*, if an award is made. The bidder acknowledges that the terms of the "bid contract" are represented by the Bid Documents.

3.2 A bid which fails to comply with the mandatory requirements of these Instructions to Bidders will be rejected. A bid which meets mandatory requirements, but which is otherwise non-compliant, may be rejected.

4. CONTRACT

4.1 The successful Bidder will be requested to sign a Canadian Standard Construction Document CCDC 2 2020 for Stipulated Price Contract, as amended by the Supplementary Conditions, within ninety (90) workings days after issuance of contract documents.

5. BID DOCUMENTS

5.1 The following documents form the basis of this bid process (the "Bid Documents"):

5.1.1 Instructions to Bidders;

5.1.2 List of Bidders

5.1.3 Bid Forms comprise:

5.1.3.1 Base Bid Form;

5.1.4 Agreement, Definitions and General Conditions of the CCDC 2 – 2020 Form of Contract (not included);

5.1.5 Supplementary Conditions to the CCDC 2 – 2020 Form of Contract;

5.1.6 Specifications;

5.1.7 Drawings;

5.1.8 Schedules (as part of drawings);

5.1.9 Addenda issued during bidding period, if any;

5.1.10 SickKids Procedures for Construction, Renovation & Physical Plant Projects;

5.1.11 SickKids Testing, Commissioning, Acceptance and Turnover (TCAT) Standard.

5.1.12 Hazardous Building Materials Assessment

5.1.13 SickKids Electronic Close-Out Guidelines_O&M

5.2 Check Bid Documents for completeness upon receipt. Inform Bid Coordinator immediately:

5.2.1 should any documents be missing or incomplete;

5.2.2 Upon finding any discrepancies or omissions.

5.3 An Invitation email will be e-mailed to invited Prime and Subcontractors by the Bid Coordinator via the Biddingo.com.

5.4 Bidding Documents are available to download at no charge to pre-qualified, invited General Contractors through the Biddingo.com.

5.5 Bidding Documents will be available to download at no charge to the pre-qualified, invited Mechanical and Electrical Subcontractors through the Biddingo.com.

5.6 Parties obtaining only partial sets of Drawings and/or Specifications are hereby advised that:

5.6.1 Any Addenda issued during the bidding period will be sent only to those parties registered with the Bid Coordinator as having received complete sets of Drawings and Specifications.

5.6.2 Bidders shall be responsible for studying all of the Bidding Documents before submitting a bid.

5.7 Bid Documents are made available only for purpose of obtaining offers for this *Project*. Their issue does not confer a license or grant for other purposes.

5.8 Except as otherwise defined in these Instructions to Bidders, the defined terms in these Bid Documents are taken from the CCDC 2 – 2020 Form of Contract as revised by the Supplementary Conditions.

6. OWNER

6.1 For purposes of this Bid, *Owner* is identified as:

The Hospital for Sick Children

555 University Ave
Toronto, Ontario
M5G 1X8

7. CONDITIONS OF THE PLACE OF THE WORK

The Hospital for Sick Children
555 University Ave
Toronto, Ontario
M5G 1 X8

7.1 The *Place of the Work* is as defined in the Bid Documents.

7.2 Refer to the Document entitled Information Available to Bidders for reports and other documents prepared or obtained with respect to the *Place of the Work*.

7.3 Before submitting a bid, investigate the *Place of the Work* to fully ascertain existing conditions, circumstances and limitations affecting the *Work*. No allowances will be made for additional costs and no claims will be entertained in connection with conditions which could reasonably have been ascertained by such investigation or other due diligence prior to submitting a bid. Drawings may reflect existing elements that may require removal and relocation. However, exact locations of those elements may vary from the locations shown on the drawings. Bidders are responsible for reviewing site conditions and ascertaining the location of all elements that may require removal and relocation, notwithstanding the identification of such locations on the drawings.

8. MANDATORY SITE MEETING

8.1 A mandatory, site meeting/tour is scheduled for 10:00:00 hrs local time on October 7, 2025 at the Place of the Work. All bidders shall attend and shall be required to confirm their attendance through the "Site Meeting Log".

Late attendees and bidders who failed to attend the mandatory meeting will be disqualified.

Bidders cannot proxy, attend, or represent other contractors or other subcontractors for the site meeting/tour

8.2 Bidders will not be issued addendums, communications, or have the ability to submit a bid if they did not attend the mandatory site meeting/tour.

8.3 Inspect existing conditions and limitations, within the *Place of the Work*, including but not limited to:

8.3.1 means of access and egress;

8.3.2 obstacles;

8.3.3 location of any elements/utilities/services requiring removal and /or relocation;

8.3.4 available locations at the *Place of the Work* for storage of *Products* and equipment (if any);

8.3.5 examining surrounding, adjacent public and private properties outside the *Place of the Work* for existing conditions and limitations including, but not limited to, rights and interests of other parties which may be interfered with during construction;

8.3.6 Determining requirements of the municipality and any other applicable authorities and utilities.

8.4 No adjustments to deadline for completion nor to *Contract Price* will be made for difficulties encountered due to conditions, features and peculiarities of the *Place of the Work* which are evident or not ascertained by *Contractor* at time of Bid submission.

8.5 No allowances will be made for additional costs, and no claims will be entertained in connection with conditions which could reasonably have been ascertained by such investigation or other due diligence prior to submitting Bid.

9. PRE-QUALIFICATION

9.1 Refer to Document entitled, List of Bidders for the list of pre-qualified and invited general contractors and pre-qualified and invited mechanical and electrical *Subcontractor*s.

9.2 Invited and pre-qualified bidders shall use only *Subcontractor*s who are pre-qualified and invited for their respective trades.

9.3 Bids received from Bidders who fail to comply with paragraph 9.2 will be declared non-compliant and rejected.

10. BID AND PERFORMANCE SECURITY

10.1 Each bid shall be accompanied by bid security in the form of a bid bond in the amount of 10%. Of the Bid Price naming the *Owner* as oblige and issued by a surety licensed to conduct surety and insurance business in Ontario. The bid security is for the benefit of the *Owner* and stands as security that the bidder, if awarded the *Contract*, will deliver the performance security and evidence of insurance and other documents required by these Instructions to Bidders or by the *Contract*, and will execute the *Contract*. The bid security shall remain valid for a period of one hundred twenty (120) days from the day after the date of bid submission. No other form of bid security is acceptable.

10.2 The bid security of the bidder whose bid is accepted will be retained by the *Owner* to compensate the *Owner* for the damages it will suffer should the successful bidder fail to execute the *Contract* and/or fail to provide the specified performance security and/or evidence of insurance and other documents required by these Instructions to Bidders or by the *Contract*.

10.3 The bid security of the bidder whose bid is accepted will be returned after the delivery of the specified performance security and evidence of insurance and other

documents required by these Instructions to Bidders or by the *Contract*, and after the execution of the *Contract*. The bid security of all other bidders will be returned after the execution of the *Contract* or after the expiry of this bid process without an award of *Contract* or after the rejection of all bids.

10.4 Each bid shall be accompanied by an agreement to bond issued by the same surety company that provides the bid bond, undertaking to provide a fifty percent (50%) performance bond and a fifty percent (50%) labour and material payment bond, both to be delivered to the *Owner* if the bidder is awarded the *Contract*.

10.5 Bids not accompanied by the required bid security and the required agreement to bond will be declared non-compliant and rejected.

10.6 Include the cost of all bonds in the Bid Price.

11. BIDDER SUBMISSION OF REQUEST FOR CLARIFICATION QUESTIONS

At any time prior to the Clarification Request Deadline, a Bidder may submit clarification questions using the Biddingo.com to request clarification on any aspect of this RFQ. Where a question relates to a specific section of this RFQ, reference should be made to that specific section number.

SickKids will answer clarification questions received by posting the question (without identifying the Bidder who submitted it) and SickKids' response to the question in one or more Addendum(s) posted on Biddingo.com for all Bidders to obtain.

SickKids may, in its sole discretion:

(a) edit a clarification question for clarity;

(b) exclude a clarification question that is unclear or inappropriate; and/or

(c) provide a single answer to multiple clarification questions of a similar nature received from various Bidders.

Where an answer results in any change to the RFQ, such answer will be formally documented through the issue of a separate Addendum reflecting that change.

Bidders' clarification questions will only be accepted through Biddingo.com in electronic format.

12. AMENDMENTS TO BID DOCUMENTS

12.1 Direct all inquiries and questions (except question/RFI) arising during the bidding period to the Bid Coordinator:

Attn: Mr. Arash Hojabri
e-mail: arash.hojabri@sickkids.ca

The Bid Coordinator is the sole contact for bidding on this *Project*. A bid may be disqualified where contact is made with any person other than the Bid Coordinator.

12.2 Neither the *Owner* nor the *Consultant* will be responsible for instructions, clarifications or amendments communicated orally. Instructions, clarifications or amendments which affect the Bid Documents will only be made by addendum.

12.3 If bidders find discrepancies, omissions, errors, departures from building by-laws, codes or good practice, and points considered to be ambiguous or conflicting, they shall bring them to the attention of the Bid Coordinator via email, not less than ten (10) days before the bid closing date, so that the *Consultant* may, if the *Consultant* deems it necessary, issue instructions, clarifications or amendments by addendum to all bidders prior to the bid closing date. The *Consultant* will endeavour to issue such addenda at least seven (7) days prior to bid closing.

12.4 Addenda issued during the bidding period shall become part of the Bid Documents and their receipt shall be acknowledged in the space provided in the Bid Form. Addenda will be sent to all bidders via Biddingo.com. Further, the *Owner* may issue Addenda following the bid closing date.

13. TAXES

13.1 The Harmonized Sales Tax (HST) shall not be included in the Bid Price. All other eligible taxes shall be included in the Bid Price. Any taxes or increases in taxes announced prior to the date of the issuance of the Bid Documents and scheduled to come into effect subsequent to such date shall be taken to be included in the Bid Price.

14. BID COMPLETION

14.1 Fill in all blank spaces on the Bid Forms in ink, or typewritten, providing all information requested, and ensure that an authorized person or persons sign all forms where indicated. Failure to provide all requested information on the Bid Forms and failure to fill in all blank spaces may result in a bid being declared non-compliant.

14.2 Use only the Bid Forms issued as part of the Bid Documents for the *Project*. If any or all pages of the Bid Forms are amended by addendum, only the amended pages shall be used to submit a bid. Failure to comply with this paragraph may result in the bid being declared non-compliant.

14.3 Information provided by bidders on the Bid Forms may be amended prior to bid closing, provided corrections are initialled by an authorized representative of the bidder. Other modifications, erasures, additions, conditions, qualifications or not initialled pre-closing amendments may result in the bid being declared non-compliant.

14.4 Bids that are not originals, are unsigned, improperly signed, not initialled, incomplete, conditional or illegible, may be declared non-compliant.

15. BID PRICE

15.1 The Bid Price shall be provided in numbers only.

15.2 Where the bidder is required to provide a breakdown of the Bid Price, the Bid Price shall govern in the case of conflict or ambiguity between the Bid Price and the sum of the breakdown of the Bid Price.

15.3 Submit Bid Price:

15.3.1 Including applicable taxes, other than the HST;

15.3.2 Including cash allowances;

15.3.3 Including assigned work and services;

15.3.4 Excluding Value Added Taxes (HST);

15.3.5 Excluding solicited and unsolicited Alternative Prices;

15.3.6 Excluding escalation clauses or other qualifications;

15.3.7 Including any *Product* requirements specified in the Bid Documents.

15.4 Bid Price is deemed to be based on specified *Product*s. Do not include unspecified *Product* substitutions and unspecified alternatives in Bid Price.

16. ALTERNATIVE PRICES

16.1 Where required by the Bid Documents, a bidder shall submit a Supplementary Bid Form – Alternative Prices.

16.2 The *Owner* reserves the right to accept or reject any or all alternative prices submitted.

17. UNIT PRICES

17.1 Where required by the Bid Documents, a bidder shall submit a Supplementary Bid Form – Unit Prices.

18. CONSTRUCTION SCHEDULE

18.1 The successful bidder shall commit to commence the *Work* on or before the date specified in the Bid Documents and, subject to adjustment in *Contract Time* as provided in the *Contract* attain *Substantial Performance* of the *Work* by the date specified in the Bid Documents.

19. BID SUBMISSION

19.1 One Stage

19.1.1 Submit one (1) **completed original Base Bid** in PDF to the following public portal: www.biddingo.com accompanied by the followings:

19.1.1.1 **The Bid Bond**;

19.1.1.2 **The Agreement to Bond;**

19.1.1.3 **The Supplementary Bid Forms** (if applicable)**;**

19.1.1.4 **Bidder's proposed preliminary construction schedule**. Ensure preliminary construction schedule is detailed and realistic and illustrates construction activity sequencing to attain Substantial Performance of The Work.

19.1.1.5 Filled "**Bidders Public Bid Opening Representative Form**" for public opening purposes.

19.1.2 Bids received before **14:00:00** hrs local time on **November 13, 2025** will be date and time stamped by Biddingo.

19.1.3 Late bids will not be accepted by the system and the Bidder will be disqualified.

19.1.4 The Bid Price shall remain valid for a period of one hundred twenty (120) days from the day after the date of bid submission.

20. DETAILS FOR BID SUBMISSION

20.1 To access the bid form and start your submission, click the Bid Documents / Online Submission. For technical support, please contact Biddingo.com directly at 1-416-756-0955 or via e-mail at ebidding@biddingo.com. Biddingo.com offers free ebidding training sessions. Sign up at www.biddingo.com/training.

20.2 Bidders require to allow sufficient time in the preparation of its Bid to ensure the Bid has been uploaded and completed the submission process on Biddingo.com by the RFQ submission deadline. Uploading large documents may take significant time depending on the size of the file(s) and Internet connection speed. Bids that are uploaded onto Biddingo.com but not submitted before the closing deadline will be deemed late, and thus rejected.

20.3 It is recommended that Bids are submitted the day before the "Bid Submission Deadline" to ensure a successful submission. Before the Bid Submission Deadline you can modify your submission.

20.4 In addition, to ensure smooth transmittal of documents, we recommend that Bidders submit multiple smaller files rather than a single consolidated large document. The system allows for unlimited file attachments.

21. WITHDRAWAL OF BID

21.1 A Bidder may withdraw its Bid by providing written notice to the RFQ Coordinator before the RFQ submission deadline, and by selecting the "withdraw my eBid response" button provided within the RFQ on Biddingo.com.

22. PRIVILEGE CLAUSE

22.1 The Submission of a Bid does not obligate the *Owner* to accept any Bid. The Owner may, in its sole discretion, elect not to proceed with the *Project*.

22.2 Should the *Owner* not receive any Bids that is within their construction budget, it may, in its sole and absolute discretion, negotiate a *Contract* for the whole *Project* with the lowest compliant bidder.

22.3 The criteria from among compliant bids to be considered by the Owner in awarding the Contract is the Base Bid Price.

Alternative Bid Prices, Supplementary Bid Form, Unit Prices, Proposed Alternatives, Proposed Schedule, Addendums will not be considered in determining the low compliant bid.

23. BID OPENING AND EVALUATION

23.1 Bids will be opened publicly through Microsoft Teams at 14:00:00 hrs on day of Bid Submission. Only those that submitted a bid will be sent a meeting request to the public opening of the bids on Teams.

Bidders are requested to submit "**Bidders Public Bid Opening Representative Form**" at the Bid Submission for the meeting invite to be sent to for the Bid Opening.

23.2 The Bid Price offered on the Base Bid Form will be considered the bidder's "Base Bid".

23.3 The *Owner* may award the *Contract* to the bidder which, in the *Owner*'s discretion, has submitted the lowest, compliant bid. Incomplete or conditional bids may be declared non-compliant.

23.4 Should the *Owner* receive no compliant bids, the *Owner*, in its discretion, may re-bid the *Project* or may negotiate a *Contract* for the whole or any part of the *Project* with any bidder which has submitted a non-compliant bid.

23.5 If compliant bids are received, but the lowest compliant bid exceeds the *Owner's* budget for the *Work*, the *Owner*, in its sole discretion, may cancel this bid process or negotiate with the bidder providing a compliant bid determined by the *Owner* as providing it with the best value, or may invite some or all of the bidders who submitted compliant bids to re-bid on modified *Bid Documents* under a new bid call. The *Owner* also reserves the right to cancel this bid process where an insufficient number of bids are submitted, or where unforeseen circumstances arise during the bid process and award period, all as determined solely by the *Owner* in its sole discretion.

23.6 Bids which contain qualifying conditions, substituted items or *Products* or excluded *Work* or that otherwise fail to conform to the Instructions to Bidders, will be disqualified or rejected as non-compliant.

23.7 In the event of a tie between more than one bid as the lowest compliant bid – meaning more than one compliant bid has an equivalent lowest Base Bid Price – the successful Bidder will be selected on the basis of best and final offers. The Owner will provide a notice to the tied bidders setting out the process for submitting a best and final offer in order to break the tie. If this effort is unsuccessful, then a draw or coin toss, in the presence of both Proponents, will be held to determine the successful proponent

24. REQUESTS FOR CLARIFICATION

24.1 The *Owner* either directly or through the *Consultant* via Bid Coordinator may contact any one or more bidders to seek further information from or to request clarification of the bid submitted by any bidder without any obligation to contact other bidders. Such additional information or clarification shall be provided promptly by the bidder to the *Owner* or *Consultant* via Bid Coordinator, as the case may be.

24.2 Requests for clarification shall not be construed as acceptance of a bid.

25. INSURANCE

25.1 Coincident with the execution of the *Contract* and prior to commencement of the Work, the successful bidder shall provide the *Owner* with a certificate of the insurance required to be obtained and maintained by the successful bidder as *Contractor* under the *Contract* identifying the *Owner* as an additional insured.

26. AWARD OF CONTRACT, EXECUTION OF THE CONTRACT AND DOCUMENTS TO BE DELIVERED

26.1 Bidders shall not communicate, issue or make any statements or news release concerning their bid, the bid process, the *Owner*'s evaluation of the bids, or the *Owner*'s award or cancellation of the bid process, or use the name of the *Owner* in any capacity, without the express written consent of the *Owner*.

26.2 If the *Owner* decides to award the *Contract* to a bidder, it will issue a letter of *Contract* award.

26.3 SickKids reserves the right, in its sole discretion, to conduct business transactions with electronic documents and using electronic signatures (DocuSign) instead of paper-based documents and wet ink signatures. Each decision to execute a document using an electronic signature shall have no effect on the legal validity of any prior or subsequently completed transactions using either electronic or paper-based documents or electronic or wet ink signatures. By submitting a Proposal, each Proponent agrees to accept electronic signatures using DocuSign as original signatures.

26.4 U.S. – Canada tariff situation

26.4.1 The Awarded Bidder is required to submit a comprehensive schedule of values, explicitly delineating any pricing impact as of Bid Submission Date due to the current US-Canada tariff situation, including but not limited to the Canadian

counter-tariff measures, as a distinct line item, accompanied by supporting documents.

26.5 Prior to commencing the *Work*, the *Contractor* shall deliver to the *Owner*:

26.5.1 the performance bond and the labour and material payment bond described in the Bid Documents, the form of such bonds to comply with the requirements of the *Contract*;

26.5.2 certificates of the insurance policies required to be maintained by the *Contractor* under the *Contract* and these Bid Documents;

26.5.3 A current Clearance Certificate issued by the Workplace Safety and Insurance Board.

26.6 Electronic Authorization of the *Contract*:

26.6.1 The *Contractor* shall identify who will be the signatories to execute the *Contract*

26.6.2 The *Contract* shall be a CCDC2-2020 Form of Contract, including the Supplementary Conditions, and will be completed to incorporate the terms of the bid submitted by the successful bidder.

26.6.3 The *Contractor's* signatories will be e-mailed a secure, electronic copy of the *Contract* through DocuSign and shall execute the *Contract* within ten (10) *Working Day*s upon receipt.

27. CONFIDENTIALITY

27.1 All material, data, information or any item in any form supplied by the *Owner* or derived from any data or material, which any bidder may have acquired in connection with this bid process:

27.1.1 is not to be used for any purpose other than in connection with the submission of a bid and the fulfillment of the *Contract*;

27.1.2 must not be disclosed without prior written authorization from the *Owner*; and

27.1.3 Shall be returned by all bidders to the *Owner*, provided that the successful bidder shall handle and deal with confidential material in accordance with the terms of the *Contract*.

27.2 Any confidential information that is supplied to the *Owner* may be disclosed by the *Owner* where it is obliged to do so under the *Freedom of Information and Protection of Privacy Act*, by an order of a court or tribunal or as otherwise required by law.

28. LIMIT OF LIABILITY

28.1 The liability of the bidder to the *Owner* for loss and damage arising out of the bidder's breach of the "bid contract" shall be limited to the lesser of the actual loss suffered by the *Owner* and 10% of the Bid Price.

28.2 In consideration of the *Owner* agreeing to receive and review the bidder's bid and as a term of the submission of the bid, the bidder does hereby waive and release the *Owner*, its officers, directors, employees, agents and contractors of and from all claims, causes of action, actions, liabilities, costs, expenses and damages that have arisen from or could arise from or in any way relate to this bid process, the evaluation, acceptance or rejection of the bid or from any previous bid process relating to the *Project*, whether such claim arises pursuant to contract, tort, statutory duty, law, equity, any actual or implied or alleged duty of fairness, duty to negotiate in good faith or duty of full disclosure, or otherwise. For certainty, *Owner* shall not, under any circumstances, be liable in contract, tort or any other cause of action or theory of law to any unsuccessful bidder for loss or damage suffered or incurred by the unsuccessful bidder as a result of the rejection of its bid or for any expenses incurred by any bidder during the preparation and submission of its bid and any subsequent tender proceedings.

29. DISPUTES

29.1 In the event of a dispute arising in connection with this bid process including, without limitation, a dispute concerning the existence of the "bid contract" or a breach of the "bid contract", or a dispute as to whether the bid of any bidder was submitted on time or whether a bid is compliant, the *Owner* may refer the dispute to a confidential binding arbitration pursuant to the *Arbitration Act, 1991*, as amended, before a single arbitrator with knowledge of procurement/bidding law. In the event that the *Owner* refers the dispute to arbitration, the bidder agrees that it is bound to arbitrate such dispute with the *Owner*. Unless the *Owner* shall refer such dispute to binding arbitration, there shall be no arbitration of such dispute.

29.2 A dispute may only be referred to arbitration if received by the Owner within 10 days after the day on which the bidder first knew, or reasonably should have known, of the circumstances giving rise to the bidder's dispute. If the bidder fails to register an alleged dispute within such time, the bidder shall not have access to the dispute process set out in this section.

29.3 In the event the *Owner* refers a dispute to binding arbitration, the *Owner* may give notice of the dispute to one or more of the other bidders who submitted bids, whether or not they may be compliant, each of whom shall be a party to and shall be entitled to participate in the binding arbitration, and each of whom shall be bound by the arbitrator's award, whether or not they participated in the binding arbitration.

29.4 In the event the *Owner* refers a dispute to binding arbitration, the parties to the arbitration shall exchange brief statements of their respective positions on the dispute, together with the relevant documents, and submit to a binding arbitration hearing which shall last no longer than two days, subject to the discretion of the arbitrator to increase such time. The parties further agree that there shall be no appeal from the arbitrator's award.

29.5 This Article is not intended to form part of any "bid contract" that may come into being between a bidder and any prospective *Subcontractor* or *Supplier* of that bidder.

30. DEBRIEFING

30.1 Bidders may request a debriefing after receipt of a notification of award. All requests must be in writing sent to same location as described in section 11.1 and must be made within sixty (60) days of notification of award. The intent of the debriefing information session is to aid the Bidder in presenting a better bid in subsequent bidding opportunities. Any debriefing provided is not for the purpose of providing an opportunity to challenge the procurement process.

31. WSIB CERTIFICATION

31.1 A Bidder who enters into a Contract with SickKids for the provision of services or construction on SickKids' premises shall maintain applicable WSIB coverage for Bidder and its employees, and otherwise comply with all applicable laws and standards in relation to worker safety, including, but not limited to, the Labour relations code, Workers Safety Insurance Board (WSIB), the *Employment Standards Act*, the *Occupational Health and Safety Act* and the Human Rights Code; and, without limiting the generality of the foregoing, upon request (and in any event upon executing any such Contract with SickKids), the Bidder shall provide SickKids with: (a) a WSIB clearance certificate indicating all assessments have been paid (or proof that the Bidder is exempt from such assessments); and (b) evidence of the Bidder's compliance with WHMIS.

32. USE OF NAME

32.1 A Bidder shall not use the name, logo or other marks of SickKids (including the name of any SickKids employees, physicians, contractors or agents) in any advertising, or other public announcements or publications, without the prior written consent of SickKids.

33. NO COLLUSION

33.1 By submitting a Bid, a Bidder represents, warrants, covenants and affirms that neither it (including its employees), nor, to the best of its knowledge, information and belief, any of its representatives (including its agents and contractors), have:
(1) agreed, conspired, connived or colluded to undertake, in a deceptive show of competition in the compilation of the Bidder's Bid in response to this RFQ; or
(2) in any manner, directly or indirectly, entered into any agreement, participated in any collusion to fix the pricing submitted in the Bidder's Bid or of any other Bidder's Bid, or otherwise taken any action in restraint of free competitive bidding in connection with this RFQ.

34. CONFLICT OF INTEREST

34.1 By submitting a Bid, a Bidder represents and warrants that, other than as disclosed in the Conflict of Interest Declaration submitted within the Bidder's Bid, no actual or potential Conflict of Interest exists with respect to the Bidder's (i) submission of its Bid; (ii) potential entering into of a Contract with SickKids; or (iii) potential performance of the Deliverables to SickKids.

Furthermore, where:

(a) The Bidder has declared in its Conflict of Interest Declaration that a Conflict of Interest exists; or

(b) SickKids discovers at any time that the Bidder is or was in a Conflict of Interest that has not been so declared;

Then SickKids may, in its sole discretion, based on the nature and severity of the Conflict of Interest, as determined in SickKids' sole discretion, disqualify the Bidder from this RFQ process; and, in addition, where the Bidder has already entered into any Contract pursuant to this RFQ, SickKids may, in its sole discretion, terminate any such Contract.

The foregoing shall be in addition to any other remedies available to SickKids at law or in equity, and in addition to any and all express and implied rights of SickKids.

35. BIDDER SHALL ONLY COMMUNICATE WITH SICKKIDS AUTHORIZED CONTACT

35.1 A Bidder shall only communicate with the SickKids Authorized Contact with respect to all matters contained in or, related to, this RFQ process, up to the point that a Bidder receives a Notice of Selection (if applicable). For clarity, where the SickKids Authorized Contact advises a Bidder in writing that another individual at SickKids has been authorized by the Authorized Contact to communicate with the Bidder for a specified purpose ("Deputized Contact"), then the Bidder shall communicate with such Deputized Contact solely as required for that specified purpose.

Where a Bidder communicates regarding this RFQ with any individual at SickKids other than the Authorized Contact (or, where applicable, a Deputized Contact), in contravention of the foregoing, then:

(a) any information provided by such other individual at SickKids to the Bidder shall not be binding on SickKids, and may not be relied upon by the Bidder;
(b) any information provided by the Bidder to such other individual at SickKids may be disregarded by SickKids in its sole discretion; and
(c) SickKids may, in its reasonable discretion, considering the nature, frequency, purpose and effect of such unauthorized communication, and any other factors that SickKids deems relevant in its sole discretion, disqualify the Bidder's Bid from proceeding in the RFQ process.

END OF DOCUMENT

1.1 PRE-QUALIFIED, INVITED GENERAL CONTRACTORS (Prime)

BDA Inc.
Diligent Construction
Furcon
Harbridge & Cross
M.J. Dixon
REA Construction
TORQUE BUILDERS

1.2 PRE-QUALIFIED, INVITED MECHANICAL CONTRACTORS

Battaglia Mechanical Services
Black & McDonald Limited
Modern Niagara Toronto Inc.
MultiTech Trades Corp
Plan Group Inc
Sprint Mechanical Inc

1.3 PRE-QUALIFIED, INVITED ELECTRICAL CONTRACTORS

Ainsworth
Black & McDonald Limited
Danik Electrical Construction
Duplex Electrical Ltd
MultiTech Trades Corp
Plan Group Inc

PART 1 - GENERAL

1.1 BIDDER

.1 From (Name of Bidder): _____

.2 Street Address: _____

.3 City, Prov, Postal Code: _____

.4 Telephone #: _____

.5 E Mail: _____

1.2 BASE BID PRICE

.1 I/We the undersigned, having carefully examined the Bid Documents issued for

The Hospital for Sick Children (SickKids)
555 University Avenue – Level 2, Toronto, Ontario, Canada, M5G-1X8

Sickkids Spect CT Room
SickKids Project AR 21-020
RFQ #2526-72-000

and having received, carefully examined and incorporated

Addenda No._____to No._____

inclusive, having visited and investigated the *Place of the Work*, and having examined all conditions, circumstances and limitations affecting the *Work*, offer to enter into a *Contract* with the *Owner* to perform the *Work* required by the Bid Documents for the price of

$_____.
(numeric)

The price offered excludes the Harmonized Sales Tax (HST) but includes all other eligible taxes.

The Bid Price shall remain valid for a period of ninety (90) days from the day after the date of bid submission.

1.3 CASH ALLOWANCES

.1 I/We hereby state the Base Bid Price stated herein includes Cash Allowance amount identified in the General Requirements which will be expended under the terms and conditions of the *Contract*.

1.4 BID SECURITY

.1 Attached to this bid is a bid bond as required by the Bid Documents. No other form of bid security is acceptable.

1.5 PERFORMANCE BOND

.1 Submitted together with the bid bond is an Agreement to Bond from the Surety Company that they are prepared to provide a Performance Bond as required by the Bid Documents.

1.6 LABOUR & MATERIAL PAYMENT BOND

.1 Submitted together with the bid bond is an Agreement to Bond from the Surety Company that they are prepared to provide a Labour & Material Bond as required by the Bid Documents.

1.7 LIST OF SUBCONTRACTORS

.1 Name and Bid Price, (HST excluded), of Mechanical *Subcontractor* included in Base Bid Price for the *Work* is:

.1 Mechanical *Subcontractor:* _____

$ _____
(numeric)

.2 Name and Bid Price, (HST excluded), of Electrical *Subcontractor* included in Base Bid Price for the *Work is:*

.1 Electrical *Subcontractor:* _____

$ _____
(numeric)

1.8 SCHEDULE

.1 I/We the undersigned declare that:

.1 I/We agree to perform the *Work*, inclusive of mobilization time, in compliance with the *Contract Documents* and attain *Substantial Performance* of the *Work* within _____ weeks after award of the *Contract;*

.2 I/We agree to complete the Work not later than _____ weeks after the date of Substantial Performance of the Work.

1.9 DECLARATIONS

.1 no person, firm or corporation other than the undersigned has any interest in this bid or in the proposed *Contract* for which this bid is made; and

.2 this bid is irrevocable and is open for acceptance by the Owner for the period specified in the Instructions to Bidders from the date of submission

1.10 US-CANADA TARIFF SITUATION

.1 I/We hereby state the Base Bid Price stated herein includes any pricing impact as of Bid Submission Date due to the current US-Canada tariff situation, including but not limited to the Canadian counter-tariff measures and will provide this pricing impact as a distinct line item/ schedule of values, accompanied by supporting documents after receiving Contract Award Notice from the Owner.

1.11 ADDRESS, LEGAL STATUS AND SIGNATURE OF BIDDER

.1 We hereby designate the address, given below as the legal address to which all notices, directions or other communications may be served or mailed:

Street _____

City / Prov / Postal Code _____

E Mail _____

.2 We hereby declare that the Bidder has legal status stated below:

Individual_____Partnership_____

Corporation incorporated under the laws of

_____Date_____

.3 This Base Bid Form is submitted in the name:

_____
(Company Name - Typed)

By_____
(Signature)

Name _____
(Typed)

Title_____

Signed this_____day of_____, 20__.

END OF DOCUMENT

HAZMAT ACKNOWLEDGEMENT FORM

CONTRACTOR'S ACKNOWLEDGEMENT

1. SickKids Hospital has included a copy of the 'Hazardous Building Assessment Report' for this contract containing designated substances present at the Project or Work site. The Notice of Designated Substances included in the Tendering Information is attached to this Acknowledgement.

2. If awarded this contract, the Contractor, as Contractor within the meaning of the OHSA, undertakes:

2.1. to inform other contractors and all subcontractors retained to perform services on the Project or the Work of the existence of the designated substances, if any, which are present at the Project, and to provide to other contractors and all subcontractors a copy of the list of designated substances which is attached to this Acknowledgement, prior to entering into any contracts with those other contractors or subcontractors for the supply of services;

2.2. to notify SickKids Hospital and project consultant of the presence of any potentially hazardous materials, odour materials, or toxic substances which will be bought to the project or the Work by the Contractor, or Contractor's employees and to provide all applicable MSDS sheets, if any, to SickKids Hospital.

2.3. to ensure that other contractors and all subcontractors retained to supply services for the Project or the work notify SickKids and project consultant of the presence of any potentially hazardous materials, odour materials, or toxic substances they bring to the Project or the Work and ensure that they provide all applicable MSDS sheets, if any, to the Contractor, other contractors and all subcontractors to so comply.

3. Contractor:

3.1. Contract to be performed:

a) The Contractor acknowledges that once the Contract is awarded, they will receive and review in full the 'Hazardous Building Materials Assessment Report" which will be related to the specific Building area of the Work and agrees to be bound by the undertakings set out in the above Section 2.

_____ _____

Contractor's Signature Date

Note: This Acknowledgement is an integral element of the Tender Documents. This Acknowledgement must be signed and returned with the Tender Bid documents.

NOTICE OF DESIGNATED SUBSTANCES

Designated Substances are present at SickKids as outlined in the 'Hazardous Building Materials Assessment (Pre-construction) Report' dated 29 November 2024 by Pinchin Ltd.

NOTICE OF BIOLOGICAL, CHEMICAL AND PHYSICAL HAZARDS

Biological:

SickKids is a fully functioning hospital and medical research facility. As such any biological hazard that could infect a person outside the facility can be expected within the facility. This includes any communicable or non-communicable disease.

Physical Hazards:

SickKids also contains physical hazards common to all public buildings. Contractors, their employees, and subcontractors must be aware of the general hazards associated with any kind of work in a full-service public facility.

In addition to "normal" physical hazards there are also specific departmental hazards. Contractors must make their employees and subcontractors aware of the hazards they may encounter and the safety precautions to take. Contractors are required to contact SickKids Project Managers and the Safety Officer regarding any specific hazards.

Chemical Hazards:

In addition to the designated substances mentioned under The Notice of Designated Substances there are a number of WHMIS regulated chemicals at SickKids and several thousand chemicals covered by The Food and Drug Act, The Pest Control Act, The Atomic Energy Control Act, and the Explosives Act.

All contractors are required to have their workers WHMIS trained to work on the premises. Contractors are required to contact SickKids Project Managers and the Safety Officer regarding any specific hazards.

SUPPLEMENTARY CONDITIONS
TO THE CCDC 2 STIPULATED PRICE CONTRACT 2020

1. REFERENCE

(a) The Canadian Standard Construction Document, CCDC 2-2020, Stipulated Price Contract, consisting of the Agreement between *Owner* and *Contractor*, Definitions and the General Conditions of the Stipulated Price Contract, and these Supplementary Conditions, are part of the *Contract Documents*.

(b) These Supplementary Conditions supplement or amend the Agreement, Definitions and General Conditions of the Stipulated Price Contract. Supplementary Conditions shall be read in conjunction with, and in the case of conflict, take precedence over the Agreement, Definitions and General Conditions. Where any of the Agreement, Definitions and General Conditions are supplemented or amended hereinafter, the unaffected provisions of such Agreement, Definitions and General Conditions shall remain in effect. Supplementary Conditions to any provisions of the Agreement, Definitions and General Conditions shall be considered as added thereto. Amendments to any provisions of the Agreement, Definitions and General Conditions shall be considered as superseding the affected provision thereof.

2. AGREEMENT BETWEEN OWNER AND CONTRACTOR

(a) Article A-1 THE WORK

(i) Delete paragraph 1.3 in its entirety and replace it with the following:

"perform the *Work* in accordance with the schedule agreed to by the parties in writing as evidenced by a *Change Order*, which schedule shall contain, at minimum, dates for commencement of the *Work*, *Substantial Performance of the Work, Ready-for-Takeover,* and *Total Completion*. In the event that the parties have not been able to agree upon such schedule within thirty (30) calendar days from execution of this *Contract*, then either party may terminate this *Contract* upon *Notice in Writing* to the other without liability."

(ii) Add new paragraphs 1.4 to 1.13 to Article A-1 as follows:

"1.4 The parties acknowledge that *COVID-19* was declared a pandemic by the World Health Organization on March 11, 2020 (the "***Pandemic***"), and that the Governments of Canada and the Province of Ontario responded to this *Pandemic* with legislative amendments, controls, orders, requests of the public, and requests and requirements to the parties to change their activities in various ways (collectively, the "***Governmental Response***"). It is uncertain how long the *Pandemic* and the related *Governmental Response* will continue, and it is unknown whether there may be a resurgence of *COVID-19* resulting in a *Pandemic Change in Law* or other supplementary or renewed *Governmental Response*.

1.5 Without limiting anything else contained herein, at all times when attending the *Place of the Work,* all *Contractor Personnel* shall comply with all applicable *COVID-19* or *Pandemic*-related protocols and guidelines pertaining to the *Place of the Work* communicated to the *Contractor* by the *Owner* from time to time. Such requirements and guidelines include, but are not limited to, compliance with social distancing guidelines and protocols, provision of reasonable evidence or attestation that the *Contractor* has obtained proof of full vaccination against *COVID-19* from all *Contractor Personnel,* and compliance with recommendations or directives made by applicable health authorities (including, but not limited to, Toronto Public Health, Public Health of Ontario and the Ontario Ministry of Labour relating to *COVID-19* or otherwise) as communicated by those authorities from time to time. The *Contractor* shall be solely responsible for ensuring that all *Contractor Personnel* provide reporting of any information as may be required by *Owner*. By way of illustration and not limitation, all *Contractor Personnel* will be required to complete a questionnaire prior to each instance in which they attend the *Place of the Work*, with such questionnaire containing pertinent questions relating to the *Pandemic* and protecting the health and safety of all persons at such location. The *Contractor* shall ensure that no *Contractor Personnel* attend or remain at the *Place of the Work* if their daily information reports or questionnaire responses do not comply with such requirements of the *Owner* (e.g., if they indicate that they have one or more symptoms of *COVID-19*). The *Owner* shall bear no liability for any delay or costs resulting from *Contractor Personnel* absences due to non-compliant reporting or questionnaire results, which costs and delays shall be solely borne by the *Contractor*. The *Contractor* shall maintain a detailed log of such reporting information and, upon request by *Owner*, shall provide the *Owner* with a copy of such detailed log. To the extent the *Owner* requires that any *Contractor Personnel* execute any acknowledgment, consent and/or waiver form related to *COVID-19* or the *Pandemic*, the *Contractor* shall ensure that the applicable person(s) do so. Notwithstanding the foregoing, the *Owner* and *Contractor* acknowledge and agree that under no circumstance shall any *Contractor Personnel* be obligated to provide or disclose the personal information of any *Contractor Personnel* to the *Owner* or any other third party.

1.6 The *Contractor* shall prepare and submit a plan (the "***Pandemic and Epidemic Response and Mitigation Plan***") prior to the execution and delivery of this *Contract*. Such *Pandemic and Epidemic Response and Mitigation Plan* (and all updates thereto) shall: (i) be subject to review and approval by the *Owner;* (ii) be incorporated by reference into and form a part of this *Contract*; (iii) incorporate the requirements and guidelines communicated by the *Owner* pursuant to paragraph 1.5, and (iv) outline how the *Contractor* will address the on-going *Pandemic*, including a

subsequent outbreak of *COVID-19,* its impact on its performance of the *Work,* and any preventative and mitigative steps that it plans to take. The *Contractor* shall, until *Substantial Performance of the Work,* monthly review, revise and submit to the *Owner* for approval the *Pandemic and Epidemic Response and Mitigation Plan* in order to reflect the current status of the *Pandemic* (including any subsequent outbreak of *COVID-19*), until such time as the *Owner* agrees, acting reasonably, that either the *Pandemic* has ended, or no longer affects the *Work* and no further updates to such plan are required. Following the review by the *Owner* of each updated *Pandemic or Epidemic Response and Mitigation Plan*, the *Contractor* shall implement such plan in accordance with its terms.

1.7 The *Contractor* expressly acknowledges and agrees that the *Contract Price* and the *Contract Time* account for and are inclusive of all costs and impacts of *COVID-19,* any *Governmental Response* and the *Pandemic* on the performance of the *Work*, including performance of the *Work* in accordance with the *Pandemic and Epidemic Response and Mitigation Plan* and all *Applicable Law*, workplace restrictions and legislation in place as of the date of the *Contract*, to the extent such costs and impacts were known as of the date of the *Contract*. The *Contractor* further expressly acknowledges that the *Place of the Work* is a health care facility and may be subject to greater impact of *COVID-19* or the *Pandemic*, including more stringent health and safety protocols. For certainty, the *Contractor* acknowledges and agrees that the following impacts of *COVID-19*, the *Pandemic, Governmental Response* and resulting requirements for performance of the *Work* during the *Pandemic* were known as of the date of the *Contract* and, accordingly, are fully accounted for in the *Contract Price* and the *Contract Time*:

.1 the best practices recommended by the Ontario Ministry of Labour for construction site health and safety during the *Pandemic* in effect at the date of the *Contract*;

.2 the need to implement physical distancing;

.3 the obligation to monitor workers, personnel and visitors to the *Place of the Work* for illness or *COVID-19* symptoms;

.4 the potential for loss of project staff due to illness or *COVID-19* symptoms;

.5 the need to implement procedures for timely reporting (including to the *Owner*) of any illness or *COVID-19* symptoms experienced by workers, personnel or visitors to the *Place of the Work*;

.6 the provision of necessary tools, equipment or personal protective equipment to all persons at the *Place of the Work*, including workers, personnel and visitors;

.7 the need to install any temporary facilities or structures (such as wash stations); and

.8 the need to implement appropriate sanitation and cleaning at the *Place of the Work* and in performance of the *Work*.

1.8 The *Owner* reserves the right, in its sole discretion and by *Notice in Writing*, to delay the commencement or to suspend performance of the *Work*, as applicable, for such time as is reasonably necessary to mitigate or prevent the risks to public health and safety resultant from *COVID-19* and the *Pandemic*. Performance of the *Work* by the *Contractor* shall be resumed upon the *Owner*'s provision of fifteen (15) days' written notice to the *Contractor*. Any costs incurred by the *Contractor* during a delay to the commencement or suspension of performance of the *Work* shall be reimbursed by the *Owner* unless such delays were deemed necessary by the *Owner* due to the *Contractor*'s breach of this *Contract*, including failure to provide or comply with the *Pandemic and Epidemic Response and Mitigation Plan*.

1.9 Should a *Governmental Response* require the *Project* to be suspended entirely, the *Contractor* shall, in agreement with the *Owner*, continue to provide *Work* to the *Project* as necessary for ongoing maintenance, health and safety and/or to meet the requirements of any insurance obtained in relation to the *Contract* where the *Contractor* is lawfully permitted or obligated to do so.

1.10 Notwithstanding any other provision in the *Contract*, if the *Contractor* is delayed in performing or unable to perform the *Work* as a result of conditions not caused by any *Contractor Personnel* and which relate to the continued spread of *COVID-19*, the continuation of or a renewed *Governmental Response*, or a *Pandemic Change in Law* to control the spread of *COVID-19*, then, provided that such delay affects the critical path of the construction schedule and provided that such conditions were not known as of the date of the *Contract*, the *Contract Time* shall be extended for such reasonable time as agreed by the *Owner* and *Contractor*. The extension of time shall not be less than the time lost as a result of the event causing such delay, unless the *Contractor* agrees to a shorter extension. The *Contractor* shall not be entitled to any payment for costs incurred as a result of such delays, save and except as expressly provided for in paragraph 1.11. Nothing in this paragraph 1.10 shall excuse the *Contractor* from complying with its schedule obligations under paragraph 6.5.5.

1.11 The *Contractor* shall be entitled to payment of the following direct costs it reasonably incurs as a direct result of *COVID-19* or the *Pandemic*, including for compliance with any new or renewed *Governmental Response*, but only to the extent such costs were outside the *Contractor*'s control, have been approved in advance and in writing by the *Owner*, and were not known or could not reasonably have been anticipated as of the date of the *Contract*:

.1 the *Contractor* being required to use additional tools or equipment, including personal protective equipment, in its performance of the *Work*;

.2 the *Contractor* being required to purchase, use or provide additional safety-related supplies in connection with its performance of the *Work*;

.3 the *Contractor* being required to install additional temporary facilities or structures, including hand washing stations;

.4 the costs associated with increased labour or material costs; and

.5 the costs incurred by the *Contractor* to reasonably mitigate the effect of a mutually agreeable delay to the critical path caused by mandatory action or inaction required by a *Governmental Response*.

In no event shall the *Owner* be liable for any other costs or damages incurred as a result of such delay or for the *Contractor* failing to perform the *Work* in accordance with any industry and governmental recommendations known or reasonably foreseeable as of the date of the *Contract,* including, without limitation: (i) any costs associated with increased labour or material costs; (ii) any costs associated with supply chain impacts or delays; or (iii) any *Consequential Damages*. The parties further agree there will be no unjust enrichment from a *Governmental Response.*

1.12 Notwithstanding any other provision in the *Contract*, the *Owner* shall not be liable or deemed to be in breach of the *Contract* for any failure or delay in rendering performance, other than failure to make timely payment to *Contractor*, arising out of:

.1 *COVID-19*;

.2 the *Pandemic*;

.3 a *Governmental Response*; or

.4 any impacts to the *Owner*'s operations and performance of its obligations hereunder that are beyond its reasonable control and are caused by, relate to or arise out of *COVID-19*, the *Pandemic*, or the *Governmental Response* (including, without limitation, any delays in obtaining possession or access to the *Place of the Work* or in obtaining permits from permitting offices or authorities).

1.13 In all cases where the *Contractor* considers itself entitled to additional time or compensation as a result of *COVID-19*, the *Pandemic* or *Governmental Response*, the *Contractor* shall provide the *Owner* with *Notice in Writing* within five (5) *Working Days* of the date on which the *Contractor* knew that it was impacted by *COVID-19* or a *Governmental Response*. The *Contractor* shall keep detailed records of all such additional costs and schedule impacts and shall provide such records to the *Owner* with a weekly report of same. Additionally, the *Contractor* shall seek the *Owner*'s approval in writing in advance of the *Contractor* taking any measures to mitigate the impact of *COVID-19,* the *Pandemic* or the *Governmental Response*."

(b) Article A-3 CONTRACT DOCUMENTS

(i) Paragraph 3.1, <u>add</u> "Supplementary Conditions".

(c) Article A-5 PAYMENT

(i) Paragraph 5.1, <u>delete</u> the preamble to this paragraph and substitute with the following:

"Subject to the provisions of the *Contract Documents,* and subject further to legislation or regulations respecting the obligations to make timely payment of construction accounts and retain holdback percentages and, where legislation or regulations do not exist or apply, subject to a holdback of ten percent (10%), the *Owner* shall:"

(ii) <u>Delete</u> paragraph 5.1.2 and substitute the following:

"on the 61st day following the publication of the certificate of *Substantial Performance of the Work*, and provided that there are no claims for lien registered against the title to the *Place of the Work* and the conditions described in GC 5.4 have been satisfied, pay to the *Contractor* the unpaid balance of the holdback amount together with such *Value Added Taxes* as may be applicable to such payment."

(iii) <u>Delete</u> paragraph 5.2.1 and substitute the following:

"If either party fails to make payments as they become due under the terms of the *Contract* or pursuant to any award by arbitration or court,

interest at one percent (1%) per annum above the prime rate on such unpaid amounts shall also become due and shall accrue until payment. Such interest shall be compounded on a monthly basis. The prime rate shall be the lowest rate of interest quoted by the Bank of Canada from time to time as the prime rate."

(iv) Add a new paragraph 5.3 as follows:

"5.3 Notwithstanding any other provision of this *Contract*, the *Consultant* may decline to approve a *Proper Invoice* or may make an allowance or adjustment for, or allow the *Owner* a set off or credit for, any amount as may be necessary to protect the *Owner* from loss on account of:

.1 non-conforming or defective *Work*, which is not rectified or remedied in accordance with the *Contract*;

.2 failure of the *Contractor* to fulfil its obligations in respect of claims for lien in accordance with GC 5.8 - LIENS;

.3 failure of the *Contractor* to make any payment promptly when due to third parties;

.4 damage to the *Work* or property of the *Owner* or others for which the *Contractor* is responsible under the *Contract* which is not addressed or rectified in accordance with GC 9.1 – PROTECTION OF WORK AND PROPERTY;

.5 errors, omissions, discrepancies, inconsistencies or irregularities in any *Proper Invoice*;

.6 unsatisfactory prosecution of the *Work*, due to factors within the control of the *Contractor,* which is not rectified in accordance with paragraph 3.4.2; or

.7 failure by the *Contractor* to provide any document deliverable in accordance with the *Contract Documents*.

.8 When the *Contractor* has remedied the cause of the withholding and has furnished evidence satisfactory to the *Consultant* of such remedy, the amount of the withholding will, subject to paragraph 5.4 hereof, be paid without interest."

(v) Add a new paragraph 5.4 as follows:

"5.4 Without prejudice to any other right or remedy of the *Owner*, the obligation of the *Owner* to make any payment to the *Contractor* under or in connection with the *Contract* is subject to the *Owner's* right to deduct or set off against any such payment any sum which

may be due to the *Owner*, or to which the *Owner* has a claim, under the *Contract*. Without limitation, if the *Contractor* is in breach or default of any provision of the *Contract*, and, after receiving notice thereof, the *Contractor* does not promptly remedy such default or breach or commence and diligently prosecute the remedy of such breach or default in accordance with the terms of this *Contract*, the *Owner* may (but shall not be obligated to) take any measures it considers reasonably necessary to remedy such default or breach and any sums incurred by the *Owner* in respect thereof may be deducted from or set off against any amount owing to the *Contractor* under the *Contract*."

(d) Article A-7 – LANGUAGE OF CONTRACT

(i) Delete paragraph 7.1 in its entirety and insert "[not used]".

(e) Article A-9 – GENERAL

(i) Add new Article A-9 – GENERAL, as follows:

"ARTICLE A-9 – GENERAL

9.1 Time is of the essence of this *Contract*.

9.2 The *Contract* shall be governed by and construed in accordance with the laws of the Province of Ontario and the federal laws of Canada applicable therein without regard to conflict of law rules that would direct application of the laws of another jurisdiction.

9.3 The *Contractor* shall be an independent *Contractor* in performing its obligations under the *Contract*. The *Contract* does not create any agency, partnership, joint venture, fiduciary or other relationship of the *Contractor* with the *Owner* other than the relationship of independent contractor. Nothing contained in the *Contract* shall create any employment or contractual relationship between the *Owner* (or anyone acting on its behalf) and any *Contractor Personnel*.

9.4 The *Contractor* shall be solely responsible for the performance of the *Work* and for any acts or omissions of any *Contractor Personnel*.

9.5 No approval or consent of, or certification, inspection, review, comment, verification, confirmation, acknowledgement or audit by, any governmental authority, the *Owner*, the *Commissioning Agent* (if any) or the *Consultant*, or anyone on their behalf, shall relieve the *Contractor* from performing or fulfilling any of its

obligations under the *Contract*. Without limitation, whenever any drawings, plans, procedures, programs or other work product of the *Contractor* requires any review, inspection, comment or approval by any governmental authority, the *Owner*, the *Commissioning Agent* (if any) or the *Consultant*, or anyone on their behalf, any such review, inspection, comment or approval shall not, in any way, reduce or modify any of the *Contractor's* obligations under the *Contract*.

9.6 Nothing contained in the *Contract* shall be construed as making the *Owner*, the *Commissioning Agent* (if any) or the *Consultant*, or anyone acting on their behalf, responsible for anything which is the responsibility of the *Contractor* under the *Contract*.

9.7 Nothing in this *Contract* shall in any way fetter the right, authority and discretion of the *Owner* as a public hospital under the *Public Hospitals Act* (Ontario) in fulfilling its statutory or other functions under *Applicable Law* including under the *Public Hospitals Act* (Ontario), and the *Local Health System Integration Act*, 2006 and in accordance with the hospital's by-laws. The *Contractor* understands and agrees that nothing in this *Contract* shall preclude the *Owner's* board of directors or trustees from performing, discharging or exercising its duties, responsibilities and powers under *Applicable Law* including under the *Public Hospitals Act* (Ontario) and the *Local Health System Integration Act*, 2006 and in accordance with the hospital's by-laws. The *Contractor* further agrees that it shall comply with all written directions issued by or on behalf of the *Owner's* board of directors from time to time and, as appropriate, such written directions will be implemented by way of a *Change Order* or *Change Directive* as provided in GC 6.2 - CHANGE ORDER and GC 6.3 - CHANGE DIRECTIVE.

9.8 The *Contractor* recognizes and understands that the *Owner* is a public hospital under the *Public Hospitals Act* (Ontario) which is managed pursuant to the *Local Health System Integration Act*, 2006 and is therefore subject to a highly regulated legal and operational environment. The *Contractor* acknowledges that the hospital in which the *Work* is to be performed must remain in operation during the performance of the *Work*, except as specifically permitted by the *Owner*, and that the *Contractor* will, without additional cost to the *Owner*, carry out, perform and coordinate the performance of the *Work* to minimize interference to the on-going operation of the hospital, including the delivery of quality patient care. The *Contractor* further acknowledges that the *Owner* has provided it with requirements as to the manner in which the *Work* is to be performed in respect of minimizing disturbance to the hospital including in respect to noise, dust control, access to

the *Place of the Work* and the particular requirements in respect to those portions of the *Work* which are to be carried out within the hospital and in respect to those portions of the *Work* where connections are being made to the hospital. In addition the *Contractor* acknowledges that it has familiarized itself with hospital operations and will perform the *Work* taking into account the requirements of the *Owner* to maintain normal hospital operations and that the *Cost of the Work* includes all premium time and overtime that may be required to perform the *Work* in accordance with the foregoing requirements.

9.9 If any part of the *Contract* or the application of such part to any party, person or circumstance shall, to any extent, be invalid or unenforceable, the remainder of the *Contract*, or the application of such part to any other party, person or circumstance, shall not be affected thereby and each provision of the *Contract* shall be valid and enforceable to the fullest extent permitted by law.

9.10 The terms of the *Contract*, which by their nature are continuing, shall survive the termination or other expiration of the *Contract*.

9.11 The parties shall, from time to time, execute and deliver all such further documents and instruments and do all acts and things as the other party may reasonably require to effectively carry out or better evidence or perfect the full intent and meaning of the *Contract*.

9.12 The table of contents, titles, section headings, running headlines and marginal notes contained in the *Contract Documents* are solely to facilitate reference to various provisions of the *Contract Documents* and in no way affect or limit the interpretation or construction of the provisions to which they refer.

9.13 This *Agreement*, including the *Contract Documents* described herein and the attachments, documents and other agreements to be furnished or executed in connection herewith, supersedes all prior negotiations, representations or agreements, either written or oral, with respect to the subject matter hereof. No modification to the *Contract* shall be effective unless made in writing and signed by both the *Owner* and the *Contractor*, unless otherwise provided for herein.

9.14 This *Agreement* may be executed electronically and in counterparts, each of which shall be deemed an original and together shall constitute a single instrument."

3. DEFINITIONS

(a) Amend the following Definitions:

(i) ***Contract**:* Add as the second sentence: "When this agreement is referred to herein as the "Agreement", the term "Agreement" shall mean "*Contract*"."

(ii) ***Contract Documents:*** Add at the end of the sentence the words "in writing".

(iii) ***Contract Time**:* Delete the definition in its entirety and replace it with:

"The *Contract Time* is the time from commencement of the *Work* to *Total Completion Date* as agreed to by the parties in writing pursuant to paragraph 1.3 of Article A-1 of the Agreement – THE WORK."

(iv) ***Substantial Performance of the Work:*** Amend the definition by deleting the period and adding the following to the end:

", and shall include delivery of the following documents as required by and specified in the *Construction Documents* or otherwise requested by the *Owner,* to the *Owner*'s satisfaction in its sole discretion:

.1 A copy of the as-built drawings completed to date in respect of the *Place of the Work*;

.2 All *Submittals*, including written guarantees, warranties, certificates, testing and balancing counts and reports, distribution system diagrams, *Shop Drawings* and evidence of satisfactorily completing required manufacturers' inspections;

.3 Operations and maintenance documents and materials reasonably necessary for immediate operation and maintenance, as required by the *Contract Documents,* which shall include all manuals, instructions, tools, software, and replacement parts or materials;

.4 Ability to secure access to the *Work;*

.5 Start-up and testing required for occupancy, evidence of certification by all testing, cleaning or inspection authorities or associations;

.6 Evidence that demonstration and training sessions have been completed by the *Contractor*;

.7 Occupancy permits or their equivalent from the local authority having jurisdiction over the *Project*, if required; and

.8 where possible and as applicable, evidence of certification by all permit-issuing authorities, indicating approval of all permitted installations.

The above items shall be submitted prior to any inspections by the permit issuing authorities."

(v) ***Value Added Taxes**:* Delete the definition in its entirety and replace it with:

"'Value Added Taxes' means the taxes exigible under Part IX of the *Excise Tax Act* (Canada) and the regulations made thereunder, as amended from time to time, that are ordinarily known as the goods and services tax and the harmonized sales tax, and may also be referred to in this *Contract* as "GST/HST"."

(b) Add the following new definitions:

*'**Alternate Location**'* has the definition set out in paragraph 3.7.6 of GC 3.7.

'***Applicable Law**'* includes all laws, statutes, ordinances, rules, regulations, codes and guidelines of any public authority having jurisdiction (including but not limited to the Ontario Ministry of Labour, Training and Skills Development and Chief Medical Officer of Health).

'***C.C.N.**'* or *'**Contemplated Change Notice**'* means a written notice from the *Consultant* to the *Contractor* describing a proposed change to the *Work* and instructing the *Contractor* to provide a *Change Notice Quotation*.

'***C.N.Q.**'* or *'**Change Notice Quotation**'* means a written quotation issued by the *Contractor* to the *Consultant* containing the *Contractor*'s proposed method of adjustment or amount of adjustment to the Contract Price, if any, and the *Contractor*'s proposed adjustment to the *Contract Time*, if any, and such other information as may be required under the applicable provisions of the *Contract*.

'***Commissioning*'** means the process of putting the *Work* or any part thereof into operation and includes start-up, verification and performance testing as described in the *Contract Documents*.

*'**Commissioning Agent**'* means the person designated by the *Owner* to witness the start-up, commissioning, testing and demonstration of the performance of building systems and technologies forming part of the *Work* and to verify that such systems and technologies perform in accordance with the requirements of the *Contract Documents*. If the *Owner* chooses not to designate a person for the foregoing purposes, "Commissioning Agent" shall mean the *Owner*.

*'**Consequential Damages**'* means (i) any consequential, incidental, special, punitive, exemplary or indirect damages, and (ii) damages of any kind, however

caused or characterized, for loss of actual or anticipated revenue or profits, business interruption, loss of reputation, loss of use, loss of business opportunity, increased capital or operating costs, or increased financing costs.

'***Construction Act'*** means the *Construction Act*, R.S.O. 1990, c. C.30, as amended.

'***Contractor Personnel'*** means any *Subcontractor* or *Supplier* or other person performing or supplying any part of the *Work,* and any employees or agents thereof, any employees or agents of the *Contractor* and all others for whom it is by law responsible.

'COVID-19' means the SARS-CoV-2 novel coronavirus that causes the disease known as COVID-19 and includes any mutation or variant of such coronavirus.

'Governmental Response' has the meaning given in paragraph 1.4 of Article A-1. For certainty, *Governmental Response* includes a *Pandemic Change in Law*.

'***HS Plan***' has the meaning given in paragraph 9.4.2 of GC 9.4 – CONSTRUCTION SAFETY.

*'**OHSA**'* means the *Occupational Health and Safety Act*, R.S.O. 1990, c. O.1, as may be amended.

'Pandemic' has the meaning given in paragraph 1.4 of Article A-1.

'Pandemic and Epidemic Response and Mitigation Plan' has the meaning given in paragraph 1.6 of Article A-1.

'Pandemic Change in Law' means any change in *Applicable Law* that:

i. came into effect after the date of this *Contract*;

ii. is directly the result of and is directly related to the occurrence, control, spread or ending of a pandemic or epidemic (including *COVID-19*); and

iii. directly affects the *Contract Time* or the *Contract Price*.

A *Pandemic Change in Law* includes any new *Applicable Law* or any amendment, other modification to, repeal or replacement of any *Applicable Law* that satisfies the foregoing requirements of subsections (i) to (iii) (inclusive).

*'**PHIPA**'* has the meaning given in paragraph 2.6.2 of GC 2.6 - CONFIDENTIALITY.

'***Proper Invoice'*** has the meaning given in paragraph 5.2.2 of GC 5.2 – APPLICATIONS FOR PAYMENT.

'Proper Invoice Submission Date' has the meaning given in paragraph 5.2.1 of GC 5.2 – APPLICATIONS FOR PAYMENT.

'***RFI'*** or '***Request for Information'*** means a written notice from the *Contractor* to the *Consultant* request a *Supplemental Instruction*."

'***Submittals'*** are documents or other forms of information which the *Contractor* is required to submit to the *Owner* or the *Consultant* and include, without limitation, *Shop Drawings*, samples, models, record drawings, test reports, certificates, diagrams and manuals.

'***Total Completion'*** shall occur when the entire *Work* (except those items arising from the provisions of GC 12.3 – WARRANTY) has been deemed to have been completed, being when the price of completion or correction of any known defects or last supply is not more than the lesser of (a) one percent (1%) of the *Contract Price;* and (b) $5,000, in accordance with the applicable provisions of the *Construction Act*, and is so certified by the *Consultant*.

'Total Completion Date' means the date agreed to by the parties in writing pursuant to paragraph 1.3 of Article A-1 of the Agreement – THE WORK by which the *Contractor* shall attain *Total Completion*, as certified by the *Consultant*.

*'**Work Site**'* means, within the *Place of the Work*, the area shown on the drawings, or designated by the *Consultant* or *Owner*, where the *Work* is to be carried out.

4. GENERAL CONDITIONS

(a) GC 1.1 CONTRACT DOCUMENTS

(i) <u>Delete</u> paragraph 1.1.1 in its entirety and insert the following:

"1.1.1 It is the intent of the *Contract Documents* that, unless otherwise expressly provided in the *Contract Documents*, the *Contract Price* covers all of the *Contractor*'s obligations under the *Contract* and all things necessary for the proper execution and completion of the *Work* in accordance with the *Contract* (together with anything reasonably inferable therefrom), including the remedying of any defects in the *Work* in accordance with the *Contractor*'s warranty obligations and, in this regard, but without limiting the foregoing, the *Contractor* shall be considered to have thoroughly reviewed the *Contract Documents*, to have carried out such inspections and investigations described in paragraph 6.4.5, and to have obtained all other necessary information as to the risks, contingencies and other circumstances affecting the *Work* (including ground water, utility locations, climate, availability of labour, *Products*, status of existing conditions and equipment and other conditions which may

affect the *Work*) and the *Contractor* accepts full responsibility for having reasonably foreseen all difficulties and costs of successfully executing the *Work*, as well as meeting all other obligations of the *Contractor*, in accordance with the *Contract*."

(ii) Delete paragraph 1.1.4 in its entirety.

(iii) Delete paragraph 1.1.5.1 in its entirety, and replace it as follows:

".1 the order of priority of documents, from highest to lowest, shall be:

- Supplementary Conditions,
- the Agreement between *Owner* and *Contractor*,
- the Definitions,
- the General Conditions,
- Division 01 of the *Specifications*,
- technical *Specifications*,
- material and finishing schedules,
- the *Drawings*."

(iv) Add new subparagraph 1.1.5.6:

"1.1.5.6 In case of discrepancies, noted materials and annotations shall take precedence over graphic indications in the *Contract Documents*."

(v) Add new sentence to the end of paragraph 1.1.9:

"The *Specifications* are divided into divisions and sections for convenience but shall be read as a whole and neither such division nor anything else contained in the *Contract Documents* will be construed to place responsibility on the *Consultant* to settle disputes among the *Subcontractors* and *Suppliers* in respect to such divisions."

(vi) At paragraph 1.1.10, add as the fourth sentence:

"1.1.10 The *Owner* shall have a perpetual, fully paid-up, royalty free, irrevocable, non-cancellable, non-terminable, worldwide, non-exclusive, sublicensable, assignable and transferable right to use all such specifications, drawings, models and copies with respect to the *Work* and for other uses as shall be reasonably required by the *Owner*."

(b) GC 1.4 ASSIGNMENT

(i) Add the following as a new paragraph 1.4.2:

"1.4.2 The *Contractor* shall not assign this *Contract* or a portion thereof without the prior written consent of the *Owner*. The *Contractor*, when requesting the *Owner*'s consent to an assignment, shall provide evidence satisfactory to the *Owner* of the proposed assignee's ability to complete this *Contract* in respect of its technical and financial competence, its work force and its equipment, along with any other information reasonably requested by the *Owner*."

(c) GC 2.1 AUTHORITY OF THE CONSULTANT

(i) At paragraph 2.1.2, add as the second sentence: "The *Contractor's* consent shall not be unreasonably withheld."

(d) GC 2.2 ROLE OF THE CONSULTANT

(i) Delete the words "progress and quality of the work" in paragraph 2.2.2 and insert "progress and quality of the *Work*".

(ii) In paragraph 2.2.4, replace the words "applications for payment" with the words "*Proper Invoices*".

(iii) Insert the words "to the *Contractor*" in paragraph 2.2.5 after the words "The *Consultant* will not be responsible" in the first two sentences of such paragraph."

(iv) At paragraph 2.2.6, delete the words "except with respect to GC 5.1 - FINANCING INFORMATION REQUIRED OF THE OWNER" in the first line.

(v) Delete the word "immediately" from paragraph 2.2.18.

(vi) Add the following new paragraph 2.2.19:

"2.2.19 The *Consultant* or the *Owner*, acting reasonably, may from time to time require the *Contractor* to remove from any involvement in the *Work*, any *Contractor Personnel* including without limitation, project managers, superintendents, *Subcontractors* or *Suppliers,* provided that the *Consultant* or the *Owner* submit a description of the cause for such removal. Such persons shall be replaced by the *Contractor* within fifteen (15) days to the complete satisfaction of the *Consultant* or the *Owner*, as the case may be and without in any way limiting or deleting the *Contractor's* obligation and responsibility to properly manage all *Contractor Personnel*."

(e) GC 2.4 DEFECTIVE WORK

(i) Add new subparagraphs 2.4.1.1 and 2.4.1.2 as follows:

"2.4.1.1 The *Contractor* shall rectify, in a manner acceptable to the *Owner,* all defective work and deficiencies throughout the *Work*, whether or not they are specifically identified by the *Consultant*.

2.4.1.2 The *Contractor* shall prioritize the correction of any defective *Work* which, in the sole discretion of the *Owner*, adversely affects the day-to-day operation of the *Owner*."

(ii) Amend paragraph 2.4.3 by deleting the words "the difference in value between the *Work* as performed and that called for by the *Contract Documents*" and insert the words "the value of such *Work* as is necessary to correct any non-compliance with the *Contract Documents*."

(iii) Add new paragraphs 2.4.4 to 2.4.7 as follows:

"2.4.4 Acceptance of the *Work* by the *Owner* or *Consultant* shall not release the *Contractor* from responsibility for correcting deficiencies which were apparent but had not been identified at the time of drawing up the deficiency list or which become apparent during any warranty period provided for in this *Contract*.

2.4.5 Upon notification of a defect in the *Work*, the *Contractor* shall, within five (5) *Working Days*, promptly provide a written statement outlining the proposed remedial measures and a schedule for implementation. Once approved by the *Consultant*, the *Contractor* shall proceed with the remedial measures without adversely affecting the construction schedule.

2.4.6 Notwithstanding any rejection of the *Work* by the *Consultant* or deduction of an amount otherwise due to the *Contractor* by the *Owner* as a result of a defect in the *Work* that is not rectified in accordance with this GC 2.4 – DEFECTIVE WORK, the *Contractor* is required to continue the *Work* in accordance with the *Contract Documents*.

2.4.7 Subject to the *Owner's* provision of a Notice of Non-Payment as required under the *Construction Act,* the *Owner* may retain a reserve fund to secure the correction of deficiencies, the amount of which reserve fund shall be equal to 200% of the *Consultant's* reasonable estimate of the cost of correcting deficient items. For certainty, the *Contractor's* failure to provide the *Owner* with copies of all required "as-built", "as-installed" or "record drawings" in the form specified in the *Contract Documents* shall constitute a deficient item for the purposes of this paragraph 2.4.7."

(iv) Add new GC 2.5 - PUBLICITY RELEASES and GC 2.6 – CONFIDENTIALITY as follows:

"GC 2.5 – PUBLICITY RELEASES

2.5.1 Neither the *Contractor* nor any *Contractor Personnel* shall release to the public, except as required by governmental authorities, any information relating to the *Contract* without the prior written consent of the *Owner*.

GC 2.6 - CONFIDENTIALITY

2.6.1 The *Contractor* shall not, except as is required to carry out its obligations, duties, responsibilities or liabilities under the *Contract*, divulge any confidential information communicated to or acquired by it in the course of carrying out its obligations, duties, responsibilities or liabilities under the *Contract*. No confidential information shall be used by the *Contractor* on any other project without the prior written approval of the *Owner* (which approval may be arbitrarily withheld). The *Contractor* shall not have any proprietary rights to or interest in the confidential information, nor shall the *Contractor* have any right to license such information to any *Subcontractor*, *Supplier* or other third party. The term, "confidential information" as used herein shall mean all information which the *Contractor* receives, either directly or indirectly, from the *Owner* or from the *Consultant*, except:

.1 information which the *Contractor* can demonstrate is, at the time of disclosure, already known to the *Contractor*;

.2 information which, at the time of disclosure, is or thereafter becomes a part of the public domain through no act or omission on the part of the *Contractor*; and

.3 information which is disclosed to the *Contractor* by a third party without a covenant of confidentiality.

2.6.2 *Contractor* acknowledges that the *Owner* is subject to the *Personal Health Information Protection Act*, 2004 ("**PHIPA**"). The *Contractor* acknowledges and agrees that, pursuant to PHIPA and the regulations under the *Public Hospitals Act* (Ontario), it is not entitled to receive any "personal health information" (as defined in PHIPA) from medical records or otherwise. Nevertheless, as a consequence of the *Work* to be conducted at the *Place of the Work*, *Contractor* may be incidentally exposed to or become aware of "personal health information". Regardless of how collected or received, the *Contractor* agrees that it will not copy, discuss, remove or transmit from the *Place of the Work* any such "personal health information".

2.6.3 The *Contractor* may disclose the confidential information to those *Contractor Personnel* to whom disclosure is required for the performance of their respective responsibilities, duties, obligations and liabilities under the *Contract*. The *Contractor* shall require such *Contractor Personnel* to

treat such information as confidential and not to disclose such information to any person other than in accordance with the terms of the *Contract*."

(f) GC 3.1 CONTROL OF THE WORK

(i) In paragraph 3.1.1, <u>delete</u> the words "and shall effectively direct" and insert "and shall effectively schedule, coordinate, direct".

(ii) <u>Add</u> new paragraphs 3.1.3 and 3.1.4 as follows:

"3.1.3 Prior to commencing individual procurement, fabrication and construction activities, the *Contractor* shall verify, at the *Place of the Work*, all relevant measurements and levels necessary for proper and complete fabrication, assembly and installation of the *Work* and shall further carefully compare such field measurements and conditions with the requirements of the *Contract Documents*. Where dimensions are not included or exact locations are not apparent, the *Contractor* shall immediately notify the *Consultant* in writing and obtain written instructions from the *Consultant* before proceeding with any part of the affected work.

3.1.4 The *Contractor* shall perform the *Work* in a good and workmanlike manner, using new materials, in accordance with all *Applicable Law* and current best practices and standards in the construction industry at the *Place of the Work*. The *Contractor* acknowledges that both time and quality are of the essence and the *Contractor* will perform the *Work* or cause the *Subcontractors* and *Supplier*s to perform the *Work* in accordance with the construction schedule."

(g) GC 3.2 CONSTRUCTION BY THE OWNER OR OTHER CONTRACTORS

(i) <u>Delete</u> subparagraphs 3.2.2.1 and 3.2.2.3 in their entirety.

(ii) <u>Add</u> new subparagraph 3.2.3.5 as follows:

".5 subject to GC 9.4 – CONSTRUCTION SAFETY, for the *Owner*'s own forces and for *Other Contractors* performing work at the *Place of the Work,* assume overall responsibility for compliance with all aspects of the applicable health and safety legislation at the *Place of the Work*, including all of the responsibilities of the *Constructor* under the *OHSA*."

(iii) <u>Delete</u> paragraph 3.2.6 in its entirety and replace it with the following:

"3.2.6 The *Owner* shall have the right to enter and/or take possession of the *Work* in whole or in part for the purposes of installing and testing fittings, furnishings and equipment, or for such other temporary or permanent use, before *Substantial Performance of the Work* so long as such entry, occupation and use does not unreasonably interfere with the

Contractor in the performance of the *Work* in accordance with the *Contract Documents*. Such entry, possession or use shall not be considered as acceptance of the *Work*, in whole or in part, or in any way relieve the *Contractor* from any of its obligations under the *Contract*. For certainty, care, custody and control of the *Work* shall remain with the *Contractor* until after *Substantial Performance of the Work* is achieved."

(h) GC 3.3 -TEMPORARY WORK

(i) Delete paragraph 3.3.1 in its entirety and replace with new paragraph 3.3.1 as follows:

"3.3.1 The *Contractor* shall provide temporary supports, structures, services (namely water, electrical power and heat) and facilities as are required to execute the *Work* and shall have sole responsibility for the design, erection, operation, maintenance and removal of *Temporary Work*."

(i) GC 3.4 - CONSTRUCTION SCHEDULE

(i) Delete GC 3.4.1 in its entirety and replace with new paragraphs 3.4.1 and 3.4.2 as follows:

"3.4.1 The *Contractor* shall:

.1 Within ten (10) *Working Days* after receiving the authorization to proceed with the *Work*, submit to the *Owner* and the *Consultant* for their review and acceptance a construction schedule indicating the critical path for the *Project* demonstrating that the *Work* will be performed in conformity with the *Contract Time* and in accordance with the *Contract Documents*. The *Contractor* shall include the requisite time in the construction schedule to allow the *Commissioning Agent* and associated witnessing persons access and resources to perform the *Commissioning*. The *Contractor* shall provide the schedule information required by this paragraph in both electronic format and hard copy. Once accepted by the *Owner* and the *Consultant*, the construction schedule submitted by the *Contractor* shall become the baseline construction schedule.

.2 Provide the expertise and resources, such resources including manpower and equipment, as are necessary to meet and maintain the accepted baseline construction schedule referred to in subparagraph 3.4.1.1 or any successor or revised schedule accepted by the *Owner* pursuant to GC 3.4 – CONSTRUCTION SCHEDULE.

.3 Monitor the progress of the *Work* at a minimum on a weekly basis relative to the construction schedule reviewed and accepted pursuant to subparagraph 3.4.1.1, or any successor or revised schedule accepted by the *Owner* pursuant to GC 3.4 – CONSTRUCTION SCHEDULE (or as otherwise specified in the *Contract Documents*), update the schedule on a monthly basis and advise the *Consultant* and the *Owner* in writing of any variation from the baseline or slippage in the schedule."

3.4.2 If:

.1 at any time it should appear to the *Owner* or the *Consultant* that the actual progress of the *Work* is behind schedule or it is foreseeable that the *Work* will become behind schedule, based on the approved construction schedule; or

.2 the *Contractor* is delayed in the performance of the *Work* for any reason other than a reason for which an extension is granted as provided in the *Contract*; or

.3 if the *Contractor* fails to file written notice of a claim for extension of time as provided in the *Contract*; or

.4 the *Contractor* has given notice to the *Owner* or the *Consultant* of any variations from the base line schedule or slippage in the schedule pursuant to GC 3.4.1.3; or

.5 the *Contractor* does not perform the *Work* substantially in accordance with the agreed schedule as provided in GC 3.4 – CONSTRUCTION SCHEDULE;

the *Contractor* shall take whatever measures that are necessary at its own cost, including taking all appropriate preventative and corrective action and steps to cause the actual progress of the *Work* to conform to the schedule, including but not limited to such extra measures as shift work, double or "stacked" shifts or an expanded work force, to maintain the schedule, and shall produce and present to the *Owner* and the *Consultant* a recovery plan demonstrating how the *Contractor* will achieve the recovery of the schedule. Unless the circumstances giving rise to the delay are matters covered by Part 6 – CHANGES IN THE WORK, all costs of taking such preventative and corrective action and steps, as well as any costs reasonably incurred or damages suffered by the *Owner* arising out of or as a result of any such delay, shall be for the account of the *Contractor*."

(j) GC 3.5 SUPERVISION

(i) Delete GC 3.5 - SUPERVISION in its entirety and replace with new GC 3.5 – SUPERVISORY PERSONNEL as follows:

"GC 3.5 - SUPERVISORY PERSONNEL

3.5.1 The *Contractor* shall employ a supervisor in connection with the *Project* (and other assistant personnel as may be required) and such supervisor and personnel shall be in attendance at the *Place of the Work* at all times that *Contractor Personnel* are at the *Place of the Work* and, in any event, while the *Work* is being performed. The supervisor shall be the person who has charge of and responsibility for the *Work* and its performance. The said supervisor shall be a "Competent Person" as such term is defined in the *OHSA*, and must have passed the most-current versions of the CSA Group courses: (i) "*Infection Control: Part 1 – Fundamentals During Construction, Renovation and Maintenance of Health Care Facilities",* and (ii) "*Infection Control: Part 2 – Effective Implementation and Practical Applications During Construction, Renovation and Maintenance of Health Care Facilities."*

3.5.2 The supervisor is responsible for ensuring all trades are aware of, and are compliant with, Preventative Measures Level IV components as set out in the most-current version of the CSA: Z317.13 protocols, and for ensuring the *Owner* is aware of all *Contractor Personnel* at the *Place of the Work*, so they can receive any applicable orientation to the *Owner* and the *Place of the Work* as the *Owner* deems necessary, in its fully discretion.

3.5.3 The supervisor shall represent the *Contractor* at the *Place of the Work* and notices and communications given to the supervisor by the *Consultant* or *Owner* shall be deemed received by the *Contractor*.

3.5.4 The supervisory personnel assigned to the *Work* shall be fully qualified to effectively deal with all scheduling, coordination, field engineering, reviews, inspections, testing, commissioning and like matters contemplated in the *Contract Documents*.

3.5.5 Supervisory personnel assigned to the *Work* shall not be changed without the prior written consent of the *Owner*.

3.5.6 The *Owner* may, by notice to the *Contractor*, instruct the *Contractor* to replace any supervisory personnel assigned to the *Work* for incompetence or upon such other grounds as the *Owner* deems appropriate. Upon receipt of any such notice, the *Contractor* shall, within fifteen (15) days of such receipt, replace any such personnel with other

personnel meeting the requirements of this GC 3.5 and as acceptable to the *Owner*."

(k) GC 3.6 SUBCONTRACTORS AND SUPPLIERS:

(i) Delete paragraph 3.6.2 in its entirety and replace with new paragraph 3.6.2 as follows:

"3.6.2 When required by the *Contract Documents*, the *Contractor* agrees that only pre-qualified *Subcontractors* on the list of pre-qualified *Subcontractors* approved by the *Owner* shall be used by the *Contractor* in connection with the *Work*. The *Contractor* agrees not to change *Subcontractors* without the prior written approval of the *Owner*, which approval will not be unreasonably withheld. No *Subcontractor* identified in writing by the *Contractor* to the *Owner* with the bid documents shall be changed without the prior written approval of the *Owner*."

(ii) Add new paragraph 3.6.7 as follows:

"3.6.7 The *Contractor* shall pay all *Subcontractors, Suppliers* and workers which it employs, all such sums as are due to them. The *Contractor* shall take all necessary steps to ensure that *Subcontractors* and *Suppliers* do likewise. All payments shall be made promptly when due."

(l) GC 3.7 LABOUR AND PRODUCTS

(i) Delete paragraph 3.7.1, and replace with:

"3.7.1 The *Contractor* shall maintain good order and discipline among the *Contractor*'s employees, *Subcontractors*, and *Suppliers* engaged on the *Work* and the *Contractor*, *Subcontractors*, and *Suppliers* shall not employ anyone not skilled in the tasks assigned or who is unsatisfactory to the *Owner*. All *Contractor Personnel* shall be competent and qualified to carry out any part of the *Work* to which they are assigned."

(ii) Delete paragraph 3.7.2, and replace with:

"3.7.2 The *Contractor* shall provide and pay for *Product*s and provide and pay for labour, tools, construction machinery and equipment, water, heat, light, power, transportation, and other facilities and services necessary for the performance of the *Work* in accordance with the *Contract* (unless otherwise specified in the *Contract Documents*)."

(iii) Add new paragraphs 3.7.4, 3.7.5 and 3.7.6 as follows:

"3.7.4 The *Owner* shall provide the *Contractor* with all relevant information on the *Product*s to be supplied by the *Owner*, if any. Any *Products* delivered to the *Place of the Work* or an *Alternate Location* and

not yet incorporated into the *Work* shall remain at the risk of the *Contractor* notwithstanding that title has passed to the *Owner* pursuant to GC 14.2 – OWNERSHIP OF MATERIALS. The *Contractor* is responsible for the safe storage of *Product*s and their protection (including *Product*s supplied by the *Owner* and *Other Contractors* to be installed under the *Contract*) in such ways as to avoid dangerous conditions or contamination to the *Product*s or other persons or property and in locations at the *Place of the Work* to the satisfaction of the *Owner.* The *Contractor* shall only store *Products* or equipment at locations at the *Place of the Work* or otherwise which have been designated in writing by the *Owner* or the *Consultant* for such purposes (if any).

3.7.5 Notwithstanding anything to the contrary, no *Product*s to be incorporated into the *Work* shall be stockpiled or stored at the *Place of the Work* before their anticipated incorporation into the *Work* unless, in the reasonable opinion of the *Consultant* and the *Owner*, the stockpiling or storage of such *Products* at the *Place of the Work* is feasible and necessary or desirable because of:

.1 impending cyclical delays in the availability of such *Products*;

.2 the probability of delay in delivery of such *Products* at a later-date due to impending or likely labour disputes, lockouts or other known or probable causes of delay at a later date; or

.3 cost benefit to the *Owner* not originally reflected in the *Contract Price*, which is sufficiently significant to justify early delivery of such *Products* to the *Place of the Work*.

The *Contractor* shall obtain the prior written approval of the *Consultant* and *Owner* for stock piling or storage of *Products* at the *Place of the Work*.

3.7.6 The *Contractor* acknowledges and accepts that the *Owner* may not have space for storage of *Products* at the *Place of the Work* and, as such, the *Contractor* agrees that the *Owner* shall not have any responsibility or liability to permit the stockpiling or storage of *Products* at the *Place of the Work*. Where the *Owner* does not have space for storage of *Products* at the *Place of the Work*, the *Contractor* may elect at its sole cost to store such *Products* at an alternate location ("***Alternate Location***") with the *Owner's* prior written consent, subject to the following conditions:

.1 the *Contractor's* obligations under paragraph 3.7.4 shall continue to apply;

.2 any *Products* stored at an *Alternate Location* shall be clearly marked, identified or labelled as being the property of the *Owner* and kept separate from other items, stock or inventory which may exist at the *Alternate Location*, including during their transport to the *Place of the Work*;

.3 the *Contractor* shall ensure adequate security and insurance is maintained in respect of such *Products* and the *Alternate Location* at all times;

.4 the *Contractor* shall ensure that such *Products* are not subject to any landlord distress rights, security interest or other encumbrance by any person and in the event of bankruptcy of the *Contractor* or any third party who may own such *Alternate Location*, the *Owner* shall retain title and priority to such *Products*;

.5 the *Owner* shall be entitled to access the *Alternate Location* and such *Products* at all reasonable times upon notice to the *Contractor;* and

Subject to compliance with the above-noted conditions, such delivery of *Products* to the *Alternate Location* shall constitute "supply" pursuant to the *Construction Act*, and the *Contractor* shall be entitled to invoice for such supply in accordance with the terms of this *Contract*."

(m) GC 3.8 SHOP DRAWINGS

(i) Add the words "AND OTHER SUBMITTALS" to the title after SHOP DRAWINGS.

(ii) Add "and *Submittals*" after the words "*Shop Drawings*" whenever found in GC 3.8.

(iii) Delete paragraph 3.8.2 in its entirety and replace with new paragraph 3.8.2:

"3.8.2 Prior to submission of the first *Proper Invoice*, the *Contractor* and the *Consultant* shall jointly prepare a schedule of the dates for submission and return of *Shop Drawings* and any *Submittals*."

(iv) Add the following sentence after the first sentence in paragraph 3.8.3:

"The *Contractor* shall submit *Shop Drawings* and *Submittals* to the *Consultant* to review in orderly sequence and sufficiently in advance so as to cause no delay in the *Work* or in the work of *Other Contractors*."

(v) Delete subparagraph 3.8.3.1 in its entirety and replace with new subparagraph 3.8.3.1:

".1 The *Contractor* has determined and correlated the field measurements with the *Shop Drawings* and any *Submittals* and field construction conditions, *Product* requirements, catalogue numbers and similar data, or will do so, if not possible at that time, and"

(vi) Add the following sentence to the end of paragraph 3.8.3:

"Shop Drawings which require approval of any legally constituted authority having jurisdiction shall be submitted directly to such authority by the *Contractor* for approval. The *Contractor* shall copy the *Consultant* on all correspondence between the *Contractor* and any such authority."

(vii) Delete paragraph 3.8.7 in its entirety and replace with new paragraph 3.8.7:

"3.8.7 The *Consultant* will review and return *Shop Drawings* in accordance with the schedule agreed upon in paragraph 3.8.2, or, in the absence of such schedule, with reasonable promptness. If, for any reason, the *Consultant* is unable to process them within the agreed-upon schedule or with reasonable promptness, the *Contractor* shall notify the *Consultant* and they shall meet to review and arrive at an acceptable revised schedule for processing. The *Contractor* shall update the *Shop Drawings* and *Submittals* Schedule to correspond to changes in the construction schedule. Changes in the *Contract Price* or *Contract Time* may be made only as otherwise provided in the *Contract*."

(viii) Add new paragraph 3.8.8 as follows:

"3.8.8 *Shop Drawings* and all other drawings, plans, specifications, models, alternatives, suggestions, ideas and similar contributions by the *Contractor* to the design and execution of the *Work*, whether before or after execution of this *Contract*, shall not be considered proprietary information and may be used by the *Owner* in the execution of the *Work* and any subsequent renovation, reconstruction, addition or other work on the *Place of the Work*, all without any compensation to the *Contractor*. The *Owner* is hereby granted an irrevocable fully paid perpetual exclusive license to use such materials for such purposes (including the right to show the same to prospective lenders, appraisers or other persons and to assign such license to any mortgagee or subsequent owner of the *Place of the Work* with or without any specific assignment document). The *Contractor* warrants that it has full right, power and authority to grant the foregoing license either because such materials are the *Contractor*'s property or because it has obtained adequate rights from the architects, engineers or other parties who have prepared them, or any other person

owning any, copyright or other right with respect to anything incorporated in such materials."

(n) New GC 3.9 - USE OF THE WORK; GC 3.10 – CUTTING AND REMEDIAL WORK; GC 3.11 – CLEAN UP; GC 3.12 – PERFORMANCE BY CONTRACTOR; GC 3.13 – COMMISSIONING; GC 3.14 – RIGHT OF ENTRY; and GC 3.15 – DOCUMENT REVIEW

(i) Add new GC 3.9 - USE OF THE WORK; GC 3.10 – CUTTING AND REMEDIAL WORK; GC 3.11 – CLEAN UP; GC 3.12 – PERFORMANCE BY CONTRACTOR; GC 3.13 – COMMISSIONING; GC 3.14 – RIGHT OF ENTRY; and GC 3.15 – DOCUMENT REVIEW as follows:

"GC 3.9 - USE OF THE WORK

3.9.1 Without limiting its obligations in paragraph 3.7.4 hereof, the *Contractor* shall confine *Construction Equipment*, *Temporary Work*, storage of *Products*, waste products and debris, and operations of employees and *Subcontractors* to limits indicated by laws, ordinances, permits, or the *Contract Documents* and shall not unreasonably encumber the *Place of the Work*.

3.9.2 The *Contractor* shall not load or permit to be loaded any part of the *Work* or any related or surrounding structures or facilities with a weight or force that will endanger the safety or integrity of the *Work* or such structures or facilities.

3.9.3 If storage or other areas are required for the *Work* in addition to the *Work Site*, the *Contractor* shall be responsible for making arrangements to obtain the additional areas and obtaining any necessary permits, permission or authorization and, if required, for making payments for permits, rental or other payments that may be required for such purpose.

GC 3.10 - CUTTING AND REMEDIAL WORK:

3.10.1 The *Contractor* shall perform the cutting and remedial work required to make the affected parts of the *Work* come together properly, whether or not such work is specified in the *Contract Documents*.

3.10.2 The *Contractor* shall co-ordinate the *Work* to ensure that the cutting and remedial work is kept to a minimum.

3.10.3 The *Contractor* shall perform all cutting and patching work by means which minimizes disruption or inconvenience to adjacent occupancies and operations. Where, in the opinion of the *Consultant*, such work may cause unacceptable disruption, noise or inconvenience, the

Consultant may instruct the *Contractor* to perform such work at times and in a manner consistent with the requirements of this paragraph and the *Contractor* shall carry out such work in conformity with such instruction without entitlement to any adjustment in *Contract Price* or *Contract Time*.

3.10.4 Cutting and remedial work shall be performed by specialists familiar with the *Products* affected and shall be performed in a manner to neither damage nor endanger the *Work*.

GC 3.11 – CLEAN UP

3.11.1 The *Contractor* shall maintain the *Work* in a safe and tidy condition and free from the accumulation of waste products and debris, other than that caused by the *Owner*, other contractors or their employees.

3.11.2 Before applying for *Substantial Performance of the Work* as provided in GC 5.4 – SUBSTANTIAL PERFORMANCE OF THE WORK AND PAYMENT OF HOLDBACK, the *Contractor* shall remove waste products and debris, other than that resulting from the work of the *Owner*, other contractors or their employees, and shall leave the *Place of the Work* clean and suitable for use or occupancy by the *Owner*. The *Contractor* shall remove products, tools, *Construction Equipment*, and *Temporary Work* not required for the performance of the remaining work.

3.11.3 Prior to submission of a *Proper Invoice* for final payment, the *Contractor* shall remove any remaining products, tools, *Construction Equipment*, *Temporary Work*, and waste products and debris, other than those resulting from the work of the *Owner*, other contractors or their employees.

GC 3.12 PERFORMANCE BY CONTRACTOR

3.12.1 The *Contractor* represents covenants and warrants to the *Owner* that it has the necessary high degree of experience and expertise required to perform the *Work* in accordance with the requirements of the *Contract Documents*. The *Contractor* covenants and agrees that, in performing its obligations under the *Contract*, the *Contractor* shall exercise a standard of care, skill and diligence that would normally be provided by an experienced and prudent contractor supplying similar services for similar projects. The *Contractor* acknowledges and agrees that throughout the *Contract*, the *Contractor's* obligations, duties and responsibilities shall be interpreted in accordance with this standard. The *Contractor* shall exercise the same standard of due care and diligence in respect of any *Product*s, personnel, or procedures which it may recommend to the *Owner*.

3.12.2 The *Contractor* represents covenants and warrants to the *Owner* that:

.1 the personnel it assigns to the *Project* are appropriately experienced;

.2 it has a sufficient staff of qualified and competent personnel to replace its designated supervisor and *Project* manager, subject to the *Owner*'s approval, in the event of death, incapacity, removal or resignation; and

.3 there are no pending, threatened or anticipated claims that would have a material effect on the financial ability of the *Contractor* to perform the *Work* under the *Contract*.

GC 3.13 – COMMISSIONING

3.13.1 In each instance where the *Contractor* intends to commence *Commissioning* of any aspect of the building systems or technologies forming part of the *Work*, the *Contractor* will, at least thirty (30) *Working Days* in advance of such commencement, notify the *Consultant* of the need to begin preparations for such *Commissioning* and, in consultation with and through the *Consultant*, shall make arrangements with the *Commissioning Agent* to effect such preparations. In this regard, the *Contractor* shall, upon the written request of the *Commissioning Agent*, promptly provide to the *Commissioning Agent* all manufacturers' and other information with respect to such building systems as the *Commissioning Agent* may reasonably require. Upon receipt and review of such information, the *Commissioning Agent* shall provide detailed information to the *Contractor* regarding checks, testing and demonstration requirements for such building systems and technologies including test parameters and evaluation criteria which are consistent with the demonstration of the proper *Commissioning* and operation of such building systems and technologies.

3.13.2 The *Contractor*, in consultation with the *Commissioning Agent* and the *Consultant*, shall schedule checks, tests and demonstrations to be carried out by, or on behalf of, the *Contractor* in respect of such *Commissioning*. The *Contractor* shall, through the *Consultant,* provide the *Commissioning Agent* with at least five (5) *Working Days'* prior notice of the conduct of any such checks, tests and demonstrations. The *Commissioning Agent* shall attend such checks, tests and demonstrations and make necessary inspections, measurements, calculations and empirical observations. Upon completion of such activities, the *Consultant* shall, as soon as reasonably practicable, provide to the *Contractor* and the *Commissioning Agent,* a report of such activities. If such report indicates that any building system or technology does not perform in accordance

with the *Contract Documents*, the *Contractor* shall, in consultation with the *Consultant* and the *Commissioning Agent*, prepare a work plan to remedy such deficiency and a schedule to check, test and re-commission any such building system or technology after such work plan has been completed. The foregoing provisions of this paragraph 3.13.2 will continue to apply until such time as the report of the *Commissioning Agent* indicates no deficiencies in such building systems or technologies.

3.13.3 The *Commissioning Agent* shall have access to the *Work Site* at all times for the purposes of carrying out the functions of the *Commissioning Agent* under this GC 3.13 - COMMISSIONING.

GC 3.14 - RIGHT OF ENTRY

3.14.1 The *Owner* shall have the right to enter or occupy the *Work* in whole or in part for the purpose of placing fittings and equipment or for other uses before *Substantial Performance of the Work*, if, in the reasonable opinion of the *Consultant*, such entry or occupation does not prevent or substantially interfere with the *Contractor* in completion of the *Contract* within the *Contract Time.*. Such entry or occupation shall not be considered as acceptance of the *Work* or in any way relieve the *Contractor* from responsibility to complete the *Contract*. In exercising such right, the *Owner* acknowledges the *Contractor's* role and responsibility as constructor under the *OHSA* and the *Owner* shall comply with the *Contractor's* safety requirements and programs in such entry or occupation.

GC 3.15 - DOCUMENT REVIEW

3.15.1 The *Contractor* shall review the *Contract Documents* and shall report promptly to the *Consultant* any error, inconsistency or omission the *Contractor* may discover. Such review by the *Contractor* shall comply with the standard of care described in paragraph 3.12.1 of the *Contract*. Except for its obligation to make such review and report the result, the *Contractor* does not assume any responsibility to the *Owner* or to the *Consultant* for the accuracy of the *Contract Documents*. The *Contractor* shall not be liable for damages or costs resulting from such errors, inconsistencies or omissions in the *Contract Documents*, which the *Contractor* could not reasonably have discovered. If the *Contractor* does discover any error, inconsistency or omission in the *Contract Documents*, the *Contractor* shall not proceed with the work affected until the *Contractor* has received corrected or missing information from the *Consultant*.

3.15.2 If the *Contractor* finds discrepancies in and/or omissions from the *Contract Documents* or has any doubt as to the meaning or intent of any part thereof, the *Contractor* shall immediately notify the *Consultant*, who

will provide written instructions or explanations. Neither the *Owner* nor the *Consultant* will be responsible for oral instructions.

3.15.3 Where part of the *Work* is affected by or depends upon for its proper execution the work of *Other Contractors* or *Owner*'s own forces and *Other Contractors* (hereinafter in this paragraph 3.15.3 referred to as "***Interface Work***"), promptly report to the *Owner* in writing and prior to proceeding with that part of the *Interface Work*, any error, inconsistency or omission in such *Interface Work* that the *Contractor* may discover. Failure of the *Contractor* to so report shall invalidate any claims against the *Owner* by reason of the error, inconsistency or omission in such *Interface Work*, except those errors, inconsistencies or omissions not then reasonably discoverable during the *Contractor's* review."

(o) GC 4.1 CASH ALLOWANCES

(i) Delete paragraphs 4.1.4 and 4.1.5 in their entirety and replace them with the following:

"4.1.4 Any surpluses in one or more cash allowances may, at the election of the *Owner,* be expended pursuant to paragraph 4.1.1 in respect of other cash allowances or to fund changes in the *Work* by way of *Change Order* or *Change Directive*, as the case may be, which amount shall be deemed to be inclusive of overhead or profit in respect of *Work* pertaining to such other cash allowances or changes.

4.1.5 Where the value of the *Work* under cash allowances exceeds the aggregate amount of all the cash allowances stated in the *Contract Documents*, the *Contractor* shall be compensated for the approved amount of such excess, and for overhead and profit on such excess, pursuant to GC 6.1 - CHANGES, GC 6.2 - CHANGE ORDER, with the *Contract Price* being adjusted to reflect such excess."

(ii) Delete paragraph 4.1.7 and replace with the following:

"4.1.7 The *Contractor* shall, within five (5) *Working Days* after receiving authorization to proceed with the *Work*, prepare a schedule of the dates for submission and authorization of items called for under cash allowance for the *Consultant's* review and *Owner*'s review and approval, so as to facilitate the timely progress of the *Work*."

(iii) Add new paragraph 4.1.8:

"4.1.8 The *Owner* reserves the right to call, or to have the *Contractor* call, competitive bids for portions of the *Work* to be paid for from cash allowances. If the *Owner* determines to proceed with competitive bids, the *Contractor* shall comply with the directions of the *Owner*."

(p) GC 4.2 CONTINGENCY ALLOWANCE

(i) Delete GC 4.2 in its entirety and insert "Intentionally Deleted".

(q) GC 5.1 FINANCING INFORMATION REQUIRED OF THE OWNER

(i) Revise the heading, "GC 5.1 FINANCING INFORMATION REQUIRED OF THE OWNER" to read, "GC 5.1 FINANCING INFORMATION REQUIRED".

(ii) Delete paragraph 5.1.1 and replace with the following:

"5.1.1 The *Owner* and *Contractor* shall provide each other with timely *Notice in Writing* of any material change in their financial ability to fulfil their respective obligations under the *Contract*."

(iii) Delete paragraph 5.1.2 in its entirety.

(r) GC 5.2 APPLICATIONS FOR PAYMENT

(i) Add new paragraph as follows:

"5.2.0 The *Contractor* shall submit a draft application for payment to the *Consultant* and *Owner* by email to the project manager, and any other person identified by the *Owner* in writing, at least five (5) *Working Days* prior to the *Proper Invoice Submission Date*. The draft application for payment will be submitted in a format to be mutually agreed upon by the *Owner*, *Consultant* and *Contractor*."

(ii) Delete paragraphs 5.2.1 to 5.2.3 in their entirety and replace them with the following:

"5.2.1 As the *Work* progresses, the *Contractor* shall submit to the *Consultant* and *Owner* by email to the project manager, and any other person identified by the *Owner* in writing, copies of the *Proper Invoice* on account as provided in Article A-5 of the Agreement, on the last Friday of the calendar month (the "***Proper Invoice Submission Date***") or, where the last Friday is not a *Working Day*, then the last *Working Day* before the last Friday of the calendar month. The *Proper Invoice* so submitted shall incorporate any changes as requested by the *Owner* prior to the *Proper Invoice Submission Date*. The *Contractor* shall not submit a *Proper Invoice* on any date other than the *Proper Invoice Submission Date*. For greater certainty, where the *Contractor* fails to submit a *Proper Invoice* on a *Proper Invoice Submission Date* or where the *Contractor* submits an application for payment that does not constitute a *Proper Invoice*, the *Contractor* shall wait

until the next *Proper Invoice Submission Date* to submit a *Proper Invoice*.

5.2.2 A "***Proper Invoice***" shall mean an application for payment that includes each of the following:

- The *Contractor*'s name and address;
- The *Proper Invoice Submission Date* applicable to the *Proper Invoice*;
- The period during which the subject work, services, products or materials were supplied;
- Identification of this *Contract* and any applicable *Change Order* or *Change Directive* (being the authority under which the work, services, products or materials were supplied);
- The purchase order number, project number, and project name, as assigned by the *Owner;*
- A description of the work, services, products or materials supplied (including quantity where appropriate);
- The amount payable for the work, services, products or materials supplied and the payment terms;
- The name, title, telephone number and mailing address of the person to whom payment is to be sent;
- A statement based on the schedule of values submitted pursuant to paragraph 5.2.4;
- Disclosure of the GST/HST applicable to the amounts claimed in accordance with the requirements of the *Excise Tax Act* (Canada), as required by GC 10.1;
- The GST/HST registration number of the *Contractor* together with all of the other details required by the *Excise Tax Act* (Canada), as required by GC 10.1;
- Where payment is requested for *Products* delivered to the *Place of the Work* but not yet incorporated into the *Work*, evidence as reasonably required by the *Consultant* to establish the value and delivery of such *Products*;

- For each *Proper Invoice* submitted after the first, a statutory declaration using the latest CCDC 9A form of "Statutory Declaration of Progress Payment Distribution by *Contractor*", declaring that payments in connection with the *Work*, as noted in the Statutory Declaration, have been made to the end of the period immediately preceding that covered by the current *Proper Invoice*;

- Evidence of compliance with worker's compensation/ workplace safety and insurance board legislation applicable to the *Place of the Work*, including payments due thereunder, as required by GC 10.4;

- *Contractor*'s calculation of the remaining amount required to complete the *Work*;

- where payment of the holdback or finishing holdback is requested pursuant to GC 5.5 and GC 5.7, a declaration that no written notices of lien have been received by the *Contractor*;

- where final payment is requested pursuant to GC 5.7, all documents required by paragraph 5.7.1; and

- Any other supporting documents required by the *Contract Documents*.

5.2.3 The amount claimed in a *Proper Invoice* shall be for the value, proportionate to the amount of the *Contract*, of *Work* performed and *Products* delivered to the *Place of the Work* or *Alternate Location* as of the last day of the payment period. No amount claimed in a *Proper Invoice* shall include *Products* delivered to the *Place of the Work* or *Alternate Location* unless the *Products* are free and clear of all security interest, liens and other claims of third parties."

(iii) Amend paragraph 5.2.4 as follows:

(A) <u>Delete</u> the words "at least 15 calendar days before the first application for payment" in the first line and <u>replace</u> with the words "within five (5) *Working Days* after receiving authorization to proceed with the *Work*."; and

(B) At the end of paragraph 5.2.4 replace the words "applications for payment" with "*Proper Invoices*".

(iv) Amend paragraphs 5.2.6 and 5.2.8 by replacing the words "Applications for payment" with "*Proper Invoices*".

(v) Delete paragraph 5.2.7 and replace it with the following:

"5.2.7 Any *Products* delivered to the *Place of the Work* but not yet incorporated into the *Work* shall remain at the risk of the *Contractor* notwithstanding the title has passed to the *Owner* pursuant to GC 14.2 OWNERSHIP OF MATERIALS."

(vi) Add new paragraphs 5.2.9, 5.2.10 and 5.2.11 as follows:

"5.2.9 The *Owner* may, in its sole and absolute discretion, elect to make payment on an application for payment that does not meet the requirements of a *Proper Invoice* set out in paragraph 5.2.2. In no event shall any such election by the *Owner* constitute a waiver of the *Owner*'s right to refuse to make payment in respect of any application for payment that does not constitute a *Proper Invoice*.

5.2.10 The *Contractor* shall submit with each *Proper Invoice* for progress payment an updated construction schedule along with an unconditional written declaration, duly signed by an authorized representative of the *Contractor*, stating that there has been no delay in the progress of the *Work* for which the *Contractor* has any claim against the *Owner* with the exception of any such claim previously disclosed in accordance with the applicable provisions of the *Contract*.

5.2.11 The *Contractor* shall cause payment to be made to all *Subcontractors*, trade contractors, workers and *Suppliers* within seven (7) calendar days after receipt of a progress payment under this *Contract* that embodies payment for their work or materials under the *Proper Invoice* or as otherwise required under the *Construction Act*. *Contractor* acknowledges that an application for progress payment will only be a *Proper Invoice* if *Owner* has received the Statutory Declaration, in addition to the other requirements listed in paragraph 5.2.3 above. This paragraph shall not prevent the *Contractor* or any *Subcontractor* from holding back payment on account of deficient work, provided the amount thereof is identified in the Statutory Declaration and is deducted from further amounts due to the *Contractor*."

(s) GC 5.3 PAYMENT

(i) In paragraph 5.3.1 replace the words "an application for payment" with "a *Proper Invoice*".

(ii) Delete subparagraph 5.3.1.1 in its entirety and replace with the following:

".1 the *Consultant* will promptly notify the *Owner* of any *Proper Invoices* received on the *Proper Invoice Submission Date*."

(iii) In subparagraph 5.3.1.2:

(A) Delete the words "28 calendar days after the receipt by the *Owner* and the *Consultant* of the application for payment," and replace them with the words "no later than twenty-eight (28) calendar days from the *Proper Invoice Submission Date*"; and

(B) At the end add the words "and, if applicable, issue a "Notice of Non-Payment" pursuant to the *Construction Act* on behalf of the *Owner*."

(iv) Add new paragraphs 5.3.2 and 5.3.3 as follows:

"5.3.2 If the *Contractor* fails to provide any element of a *Proper Invoice* listed in paragraph 5.2.2, including a statutory declaration or the workers' compensation clearance certificate, the application for payment will not constitute a *Proper Invoice* and the *Owner* shall not be required to make payment to the *Contractor* until a complete *Proper Invoice* is submitted on a *Proper Invoice Submission Date*.

5.3.3 The *Contractor* shall have no entitlement to payment and no *Proper Invoice* may be submitted for changes in the *Work* without a written *Change Order* or *Change Directive* issued by the *Owner*."

(t) GC 5.4 SUBSTANTIAL PERFORMANCE OF THE WORK AND PAYMENT OF HOLDBACK

(i) Add the following to the end of 5.4.1:

"The *Contractor* shall publish, in a construction trade newspaper in the area of the location of the *Work*, a copy of the certificate of *Substantial Performance of the Work* within seven (7) days of receiving a copy of the Certificate signed by the *Consultant*, and the *Contractor* shall provide suitable evidence of the publication to the *Consultant* and *Owner*. If the *Contractor* fails to publish such notice, the *Owner* shall be at liberty to publish and back charge the *Contractor* its reasonable costs for doing so."

(ii) Delete paragraph 5.4.2 in its entirety.

(iii) In paragraph 5.4.4, replace the words "application for payment" with the words "*Proper Invoice",* delete the final "." and add the following to the end of paragraph 5.4.4:

"twenty-six (26) calendar days after publication of the certificate of *Substantial Performance of the Work.* After the receipt of a *Proper Invoice* for payment of the holdback amount from the *Contractor,* including all documents as provided in paragraph 5.2.2, the *Consultant* will issue a certificate for payment of the holdback amount. The *Owner* may refuse to pay some or all of the holdback amount, provided that the *Owner* complies with any applicable requirements of the *Construction Act*."

(u) GC 5.5 FINAL PAYMENT

(i) Delete paragraph 5.5.1 in its entirety and replace with the following:

"5.5.1 When the *Contractor* considers that *Total Completion* has been achieved, including that all deficiencies which are identified by the *Owner* or *Consultant* have been remedied, the *Contractor* shall notify the *Consultant* and *Owner* in writing. After receipt of a report from the *Consultant* verifying that all building systems and other technologies forming part of the *Work* are operational in accordance with the *Contract Documents* (subject to any qualifications noted in the report reflecting matters which are not of a material nature), and subject to the *Consultant* certifying that the *Contractor* has attained *Total Completion* by the *Total Completion Date*, the *Contractor* may submit a *Proper Invoice* for final payment. The *Contractor's Proper Invoice* for final payment shall be accompanied by any documents or materials required as part of a *Proper Invoice* pursuant to paragraph 5.2.2 together with the following, where applicable:

.1 all required manufacturers' inspection reports, certifications, guarantees, warranties and other similar documentation as specified in the *Contract Documents*;

.2 all maintenance manuals, operating instructions, maintenance and operating tools, replacement parts or materials as specified in the *Contract Documents*;

.3 certification by all permit issuing authorities having jurisdiction indicating approval of all permitted installations forming part of the *Project*;

.4 certification by all testing, commissioning, cleaning or inspection authorities or associations as specified in the *Contract Documents*;

.5 all required "as-built", "as-installed" or "record drawings" in the form specified in the *Contract Documents*; and

.6 statement of reconciliation of all change orders or claims against the *Contract*."

(ii) In paragraph 5.5.2:

(A) Delete from line 1 the words "an application" and replace them with the words "a *Proper Invoice*"

(B) Delete from line 2 the words "validity of the application" and replace them with the words "the validity of the *Proper Invoice*"; and

(C) Delete from line 2 the words "application for final payment valid" and replace them with the words "the *Proper Invoice* valid";

(D) Add the following to the end of paragraph 5.5.2:

"The issuance of such final certificate in no way relieves the *Contractor* from correcting any incomplete work or any defects or deficiencies in the *Work* not readily apparent at the time of issuance of such certificate."

(iii) In paragraph 5.5.3, replace the word "application" with the words "*Proper Invoice*" and, before the words "the *Owner*", add the words "the *Consultant* on behalf of".

(iv) Delete paragraph 5.5.4 in its entirety and replace it with the following:

"5.5.4 Payment of a *Proper Invoice* for final payment shall be made by the *Owner* in accordance with paragraph 5.3.1.3."

(v) New GC 5.8 – LIENS

(i) Add new GC 5.8 – LIENS as follows:

"GC 5.8 – LIENS

5.8.1 In the event that a construction lien is registered against the *Project* by or through a *Subcontractor* or *Supplier*, and provided the *Owner* has paid all amounts properly owing under the *Contract*, the *Contractor* shall, at its own expense:

.1 within ten (10) days, ensure that any and all construction liens and certificates of action are discharged, released or vacated by the posting of security; and

.2 in the case of written notices of lien, ensure that such notices are withdrawn, in writing.

5.8.2 In the event that the *Contractor* fails to conform with the requirements of paragraph 5.8.1, the *Owner* may set off and deduct from any amount owing to the *Contractor*, all costs and associated expenses, including the costs of borrowing the appropriate cash, letter of credit or bond as security and legal fees and disbursements. If there is no amount owing by the *Owner* to the *Contractor*, then the *Contractor* shall promptly reimburse the *Owner* for all of the said costs and associated expenses."

(w) GC 6.1 – OWNER'S RIGHT TO MAKE CHANGES

(ii) Add new paragraphs 6.1.3 and 6.1.4 as follows:

"6.1.3 If any change in the *Work* results in either a deletion of a part of the *Work* or the removal of a part of the *Work* in circumstances where the *Owner* determines, in its discretion, that the removed scope should be performed by the *Owner*'s own forces or *Other Contractors*, the *Contractor* shall not be entitled to any compensation for *Consequential Damages* resultant from such deletion or removal.

6.1.4 Where the *Contractor* is required to perform changed or additional *Work* resulting in an adjustment to the *Contract Price*, and provided that the parties do not agree to value the changed or additional work on a lump sum basis, the adjustment to the *Contract Price* shall be determined in accordance with paragraph 6.3.6, and the *Contractor*'s percentage fee shall be as follows:

.1 *Contractor*'s fee on its own work: 12% on the actual cost of the *Contractor's* work, calculated as follows:

.1 Overhead: 7% on the actual cost, plus

.2 Profit: 5% on the actual cost.

.2 *Contractor's* fee on *Subcontractor's* work: 10% on the actual cost of the *Subcontractor's* work, calculated as follows:

.1 Overhead: 5% on the actual cost, plus

.2 Profit: 5% on the actual cost.

.3 *Subcontractor's* mark up on *Subcontractor's* work: 12% on the actual cost of the *Subcontractor's* work, calculated as follows:

.1 Overhead: 7% on the actual cost, plus

.2 Profit: 5% on the actual cost.

.4 Overhead percentage identified in subparagraphs 6.1.4.1, .2., and .3 above includes, without limitation, all site and head office overheads including insurance and bonding, associated travel costs, financing costs including holdback, bonding and insurance costs, the salaries of superintendents, foremen, project manager, engineer, timekeepers, accountants, clerks, watch persons and all other site supervision staff employed directly on the *Work*, co-ordination with other trades affected, use of temporary offices, sheds and other general temporary site support facilities and all utilities used therein and licenses and permits, except when these are special for particular items or *Work*.

.5 Labour costs shall be the actual, prevailing rates at the *Place of the Work* paid to the workers, plus statutory charges on labour including workers' compensation/workplace safety and insurance board premiums, unemployment insurance, Canada Pension, vacation pay, hospitalization and medical insurance.

.6 Quotations for changes to the *Work* shall be accompanied by itemized breakdowns together with detailed, substantiating quotations or cost vouchers from *Subcontractors* and *Suppliers*.

.7 Unit and alternative prices included in the *Contract* include supply, installation, *Products*, equipment, services, materials, labour, overhead, profit and taxes, but exclude *Value Added Taxes*.

.8 Notwithstanding any other provision herein, the *Owner*, through the *Consultant*, reserves the right, at its sole discretion, to determine whether any payment for changes in the *Work* resulting from unforeseen conditions or otherwise shall be accounted for under a cash allowance, if any. For certainty, the *Contractor* shall only be entitled to charge overhead and profit pursuant to paragraph 6.1.4 in respect of a change that the *Owner* or *Consultant* has determined is not to be accounted for under a cash allowance, if any. The *Consultant* shall provide timely notice to the *Contractor* of such determination.

.9 Where a change to the *Work* results in a net new difference to the scope of *Work*, whether by addition or deletion, the adjustment in the *Contract Price,* including overhead and profit, if any, shall only be calculated on the basis of the net difference with respect to that change in the *Work*.

.10 If any change or deviation in, or omission from the *Work* is made by which the amount of *Work* to be performed is decreased, or if the whole or a portion of the *Work* is dispensed with, no compensation is claimable by the *Contractor* for any loss of anticipated profits in respect thereof.

.11 For certainty, no additional fee or mark-up will be chargeable to the *Owner* other than as specified in this paragraph 6.1.4."

(x) GC 6.2 – CHANGE ORDER

(i) Delete paragraph 6.2.1 in its entirety and replace it as follows:

"6.2.1 When a change in the *Work* is proposed or required, the *Consultant* shall issue a C.C.N. to the *Contractor*. Upon receipt of the C.C.N., the *Contractor* shall, as soon as reasonably practicable, submit to the *Consultant* a C.N.Q. in form acceptable to the *Consultant* and containing such information as the *Consultant* may reasonably require, including, as applicable, a breakdown of net direct costs estimated to be incurred to effect such change, the related overhead and profit, and the anticipated impact on the construction schedule based on critical path methodology."

(ii) In paragraph 6.2.2, replace the words "applications for progress payment" with the words "*Proper Invoice* for progress payment".

(iii) Add new paragraph 6.2.3 as follows:

"6.2.3 Upon the *Contractor* and the *Owner* signing a *Change Order*, the *Change Order* shall constitute full settlement of all matters addressed in the *Change Order*."

(y) GC 6.3 CHANGE DIRECTIVE

(i) In paragraph 6.3.6, after the word "actual" insert the words "net direct".

(ii) Delete subparagraph 6.3.7.1(2) and insert:

"(2) Intentionally Deleted"

(iii) Amend subparagraph 6.3.7.1(3) so that it reads:

"(3) the *Contractor's* personnel engaged in the preparation of *Shop Drawings*, fabrication *Drawings*, coordination *Drawings* and record *Drawings*."

(z) GC 6.4 CONCEALED OR UNKNOWN CONDITIONS

(i) Delete subparagraph 6.4.1.2 in its entirety.

(ii) Add new paragraph 6.4.5 as follows:

"6.4.5 The *Contractor* confirms that, prior to bidding the *Project*, it carefully investigated the *Place of the Work* and applied to that investigation the degree of care and skill described in paragraph 3.12.1.

Such investigation included, where appropriate and having regard to the nature of the *Work*, an inspection of any existing structures or conditions at the *Place of the Work* that might reasonably be expected to impact the *Work*. The *Contractor* is not and shall not be entitled to compensation or to an extension of the *Contract Time* for conditions which could reasonably have been ascertained by the *Contractor* by such careful investigation undertaken prior to submission of the bid."

(aa) GC 6.5 DELAYS

(i) Delete paragraph 6.5.1 in its entirety and insert:

"6.5.1 If the *Contractor* is delayed in the performance of the *Work* by any breach by the *Owner* of its obligations under the *Contract*, or by any fault of other contractors of the *Owner* engaged by the *Owner* for the execution of the *Project*, or by any act or omission of the *Consultant* contrary to the provisions of the *Contract Documents*, or such is attributable to any person employed or engaged directly or indirectly by the *Owner*, any such *Other Contractor*, or the *Consultant*, as the case may be, then the *Contract Time* shall be extended for such reasonable time as the *Consultant* may recommend in consultation with the *Contractor*, and the *Contractor* shall be reimbursed by the *Owner* for reasonable, actual direct costs necessarily incurred by the *Contractor* as result of the delay, all subject to, and in accordance with, the provisions of paragraph 6.5.5."

(ii) At paragraph 6.5.2, amend the last sentence to read:

"The *Contractor* shall be reimbursed by the *Owner* for the *Contractor*'s actual, direct costs necessarily incurred by the *Contractor* as a result of the delay subject to, and in accordance with, the provisions of paragraph 6.5.5."

(iii) Add the following to the end of paragraph 6.5.2:

"Notwithstanding the foregoing, (i) where the stop work order was issued as a result of or due to an event or cause listed in paragraph 6.5.3 and was not the result of an act or fault of the *Contractor* or any person employed or engaged by the *Contractor* directly or indirectly, this paragraph 6.5.2 shall not apply and the *Contractor*'s entitlement to adjustment of the *Contract Time* or *Contract Price* shall be governed by paragraph 6.5.3, and (ii) where the stop work order was issued as a result of or due to the *Pandemic* and was not the result of an act or fault of the *Contractor* or any person employed or engaged by the *Contractor* directly or indirectly, this paragraph 6.5.2 shall not apply and the *Contractor*'s entitlement to adjustment of the *Contract Time* or *Contract Price* shall be governed by the provisions of Article A-1 hereof."

(iv) At paragraph 6.5.3, renumber subparagraph 6.5.3.4 as 6.5.3.5 and insert a new subparagraph 6.5.3.4 as follows:

".4 disease, epidemics, pandemics, power shortages or outages, or".

(v) At paragraph 6.5.3, delete the words "*Consultant* or anyone employed or engaged by them directly or indirectly" at the end of this paragraph.

(vi) Delete paragraph 6.5.5 in its entirety and insert the following:

"6.5.5 The *Contractor* shall not be entitled to any extension of *Contract Time* or to any compensation in respect of any delay referred to in paragraph 6.5.1 or paragraph 6.5.2, or to any extension of *Contract Time* in respect of any delay referred to in paragraph 6.5.3, unless the *Contractor* is able to demonstrate that:

(a) the *Contractor* has taken all reasonable steps required to mitigate the effect of the delay;

(b) the delay has an adverse impact on the ability of the *Contractor* to complete any critical path activity in accordance with the construction schedule; and

(c) in respect of a delay referred to in paragraph 6.5.1, the delay is predominantly attributable to a breach, fault, act or omission referred to in such paragraph.

In such case, the *Contract Time* will be extended for such reasonable period which reflects the time lost as a result of such impact and, where the provisions of paragraph 6.5.1 apply, the *Contractor* shall only be compensated for reasonable actual direct costs necessarily incurred by the *Contractor* as a result of such impact including those incurred to reasonably mitigate the effect of the delay."

(vii) Add new paragraphs 6.5.6, 6.5.7, 6.5.8, 6.5.9 as follows:

"6.5.6 If the *Contractor* is delayed in the performance of the *Work* by an act or omission of the *Contractor* or anyone employed or engaged by the *Contractor* directly or indirectly, or by any cause within the *Contractor's* control, then, subject to paragraph 3.4.2, the *Contract Time* may be extended for such reasonable time as the *Consultant* may decide in consultation with the *Contractor*. The *Owner* shall be reimbursed by the *Contractor* for all reasonable costs incurred by the *Owner* as the result of such delay, including all services required by the *Owner* from the *Consultant* as a result of such delay by the *Contractor* and, in particular, the cost of the *Consultant's* services during the period between the date of *Substantial Performance of the Work* stated in Article A-1 herein as the

same may be extended through the provisions of these General Conditions and any later, actual date of *Substantial Performance of the Work* achieved by the *Contractor* as confirmed in the certificate of *Substantial Performance of the Work*.

6.5.7 During any suspension of the *Work* or any construction or building operations, for whatever reason, the *Contractor* shall maintain adequate surveillance of the *Work* and undertake such maintenance and protection of the *Work* as may be necessary to maintain health and safety and, when possible, to protect *Products*, materials, plant and equipment already installed in the *Work* or delivered to the *Place of the Work*. The *Contractor* shall be responsible for the security, care, maintenance and protection of the *Work* in the event of any such shut down or interruption in the performance of the *Work*.

6.5.8 If the *Contractor* is delayed in the performance of the *Work* by an act or omission of the *Contractor* or anyone for whom the *Contractor* is responsible, then the *Contractor* shall be responsible to put in place any preventative or corrective measures to recover and prevent lost time in accordance with paragraph 3.4.2.

6.5.9 Notwithstanding the foregoing, if the *Contractor* is delayed in performance of the *Work* by the *Pandemic*, *COVID-19* and/or the institution, continuation or renewal of a *Governmental Response*, then this GC 6.5 shall not apply and the terms set out in paragraphs 1.4 - 1.11 of Article A-1 shall govern. For certainty, this GC 6.5 – DELAYS shall govern with respect to all delays in the performance of the *Work*, except to the extent that any such delays are caused by the *Pandemic*, *COVID-19* and/or the institution, continuation or renewal of a *Governmental Response*, in which case the provisions set out in paragraphs 1.4-1.11 of Article A-1 shall apply."

(bb) GC 6.6 - CLAIM REPORTING

(i) <u>Delete</u> GC 6.6 – CLAIMS FOR A CHANGE IN CONTRACT PRICE and replace with new GC 6.6 – CLAIM REPORTING as follows:

"GC 6.6 - CLAIM REPORTING

6.6.1 If the *Contractor* intends to make any claim for an extension to the *Contract Time* or an increase in the *Contract Price* (or reimbursement for costs or any other compensation) the *Contractor* shall give notice to the *Owner* and the *Consultant* of such intention as soon as reasonably practicable and, in any event, within ten (10) *Working Days* following the date when the event or circumstance giving rise to such claim becomes known to the *Contractor*. As soon as reasonably practicable and, in any event, within ten (10) *Working Days* following the date of such notice, the

Contractor shall submit to the *Owner* and the *Consultant* such details of the claim that are then available, and promptly notify each of them if, at any time thereafter, the *Contractor* becomes aware of any further information pertaining to the claim, giving details of that information to the extent such information is new or renders information previously submitted inaccurate or misleading. The *Contractor* shall keep such records as may be necessary to substantiate any claim in respect of any such entitlement. The *Contractor* shall permit the *Owner* and the *Consultant* to inspect any such records, and shall provide copies to them upon their request. Failure of the *Contractor* to comply with the provisions of this paragraph in respect of any claim of the *Contractor* shall be deemed to be an express waiver by the *Contractor* of any right to assert such claim."

(cc) GC 7.1 OWNER'S RIGHT TO PERFORM THE WORK, TERMINATE THE CONTRACTOR'S RIGHT TO CONTINUE WITH THE WORK OR TERMINATE THE CONTRACT

(i) Delete paragraph 7.1.2, and replace with the following:

"7.1.2 If the *Contractor* should neglect to prosecute the *Work* properly or otherwise fails to comply with the requirements of the *Contract*, the *Owner* may, without prejudice to any other right or remedy the *Owner* may have, give the *Contractor Notice in Writing* that the *Contractor* is in default of the *Contractor's* contractual obligations and instruct the *Contractor* to correct the default within five (5) *Working Days* of receipt of such *Notice in Writing*."

(ii) Revise subparagraph 7.1.3.2 by substituting the words "an acceptable schedule" with the words "a schedule acceptable to the *Owner*".

(iii) Delete subparagraph 7.1.5.2 and replace it with the following:

"7.1.5.2 withhold further payment to the *Contractor* until the *Owner* has completed all *Work* required by the *Contract Documents* and satisfied any of its costs or damages resulting from the *Contractor's* default; and"

(iv) Delete the words "the difference" at the end of subparagraph 7.1.5.3 and replace them with the following:

"on the expiry of the warranty period specified in paragraph 12.3.1 for that portion of the *Work* performed by the *Contractor*, provided that such payment shall be made only in accordance with the requirements set out in GC 5.5 – FINAL PAYMENT."

(v) Delete the words "the difference" at the end of subparagraph 7.1.5.4 and replace them with the following:

"for that portion of the *Work* performed by the *Contractor*, provided such payment shall be made only in accordance with the requirements set out in GC 5.5 - FINAL PAYMENT."

(vi) Add new paragraph 7.1.7 to 7.1.9 as follows:

"7.1.7 The *Owner* has the authority, in its sole discretion, to stop or suspend the progress of the *Work* whenever, in the *Owner's* opinion, there is a danger to safety, life or property or to the neighbouring property or to the *Work*. If the progress of the *Work* is stopped or suspended by the *Owner*, the *Consultant* shall, within two (2) *Working Days* of such stoppage or suspension, provide written confirmation to the *Contractor* and the *Owner* of such stoppage or suspension.

7.1.8 Where, pursuant to the provisions of GC 7.1 - OWNER'S RIGHT TO PERFORM THE WORK, TERMINATE THE CONTRACTOR'S RIGHT TO CONTINUE WITH THE WORK OR TERMINATE THE CONTRACT, the *Owner* has exercised its right to terminate this *Contract*, the *Owner* shall have the right, upon written notice to the *Contractor*, to require the *Contractor* forthwith upon notification of the exercise of such right, to make available to the *Owner*, its authorized agents, servants and representatives, all accounts, records and documents of the *Contractor* relating to the *Work*. Upon the *Owner* exercising such right, the *Contractor* shall be deemed, without further formality, to have sold, assigned and set over unto the *Owner*, without further consideration, those agreements, arrangements and contracts with *Subcontractors*, *Suppliers*, engineers and others (as well as its interest in any performance bonds, labour and material payment bonds or other security held by the *Contractor* in respect of any such contracts) to which the *Contractor* is a party with respect to the performance of the *Work* which the *Owner* designates in writing to the *Contractor* after the giving of notice to stop the *Work* or terminate the *Contract*. The remainder of such contracts shall continue to be the property and responsibility of the *Contractor*. The *Contractor* shall, upon written request by the *Owner* and in a form reasonably satisfactory to the *Owner,* execute such further assignments to give effect to the foregoing as the *Owner* shall reasonably require.

7.1.9 The *Owner* may terminate the *Contract* at any time for any reason or no reason, upon at least thirty (30) days' written notice to the *Contractor*. In such event, the *Owner* shall pay for the *Work* performed up to the effective date of termination and for any additional, verifiable direct costs related directly to such termination which are a reasonable consequence of the termination. The *Owner* shall not be liable to the *Contractor* for any other costs or damages whatsoever arising from such early termination of the *Contract* including, without limitation, *Consequential Damages*."

(dd) GC 7.2 CONTRACTOR'S RIGHT TO SUSPEND THE WORK OR TERMINATE THE CONTRACT

(i) Delete paragraph 7.2.2 and replace it with the following:

"7.2.2 If the *Work* is stopped or otherwise suspended for a period of one hundred and twenty (120) calendar days or more under an order of a court or other public authority as the result of an act or default of the *Owner* or anyone employed or engaged by the *Owner*, the *Contractor* may, without prejudice to any other right or remedy that the *Contractor* may have, by giving the *Owner Notice in Writing*, terminate the *Contract*."

(ii) Delete subparagraph 7.2.3.1 in its entirety and insert the words "Intentionally Deleted".

(iii) Delete subparagraph 7.2.3.3 in its entirety and replace with the following:

"7.2.3.3 the *Owner* fails to pay the *Contractor* when due the amount certified by the *Consultant*, or otherwise payable in accordance with legislation governing the payment of construction accounts, or awarded by arbitration or a court, or"

(i) At subparagraph 7.2.3.4, delete the words ", except for GC 5.1 - FINANCING INFORMATION REQUIRED OF THE OWNER,"

(ii) Delete paragraph 7.2.4, and replace with the following:

"7.2.4 The *Contractor's Notice in Writing* to the *Owner* provided under paragraph 7.2.3 shall advise if the correction of the default is not commenced within ten (10) *Working Days* following receipt of the *Notice in Writing*, the *Contractor* may, without prejudice to any other right or remedy the *Contractor* may have, stop or suspend the *Work* or terminate

(iii) At paragraph 7.2.5, in line 2, after the words "work performed" add the words: "to the date of termination of the *Contract* by *Contractor",* and in line 3, add the word "direct" before the word "damages."

(iv) Add the following at the end of paragraph 7.2.5:

"The foregoing defaults in contractual obligations do not apply to the withholding of payments because of the *Contractor's* failure to pay all legitimate claims promptly, or because of the registration of liens against the title to the *Project,* until such claims for lien are discharged by the *Contractor* as required by GC 5.6 – DEFERRED WORK, or because payments or certificates of payment are withheld by reason of those matters described in paragraph 5.4 of Article A-5 – PAYMENT."

(v) Add new paragraph 7.2.6:

"7.2.6 If the *Contractor* terminates the *Contract* under the conditions described in this GC 7.2 - CONTRACTOR'S RIGHT TO SUSPEND THE WORK OR TERMINATE THE CONTRACT, the *Contractor* shall be entitled to be paid for all *Work* performed to the date of termination and the *Contractor* shall leave the *Work* and the *Work Site* in a safe and secure condition."

(ee) GC 8.1 AUTHORITY OF THE CONSULTANT

(i) Delete GC 8.1 in its entirety.

(ff) GC 8.3 NEGOTIATION, MEDIATION, AND ARBITRATION

(i) Delete GC 8.3 in its entirety and replace with the following:

"8.3.1 The parties shall make all reasonable efforts to resolve any dispute by amicable negotiations, and agree to provide, on a without prejudice basis, frank, candid and timely disclosure of relevant facts, information and documents to facilitate such negotiations.

8.3.2 If a dispute is not resolved through negotiations, the parties may, by agreement, determine to mediate the dispute. Such mediation will be conducted in accordance with the current version of CCDC40.

8.3.3 In the event that a dispute is not resolved through negotiation and/or mediation, the parties may, by agreement, determine to arbitrate such dispute. Such an arbitration will be conducted in accordance with the current version of CCDC40.

8.3.4 Within five (5) days of receipt of the agreement of the parties to arbitrate under paragraph 8.3.3, the *Owner* and the *Contractor* shall give the *Consultant* a written notice containing:

.1 a copy of the agreement to arbitrate,

.2 a copy of the supplementary conditions to this *Contract*, and

.3 any claims or issues which the *Contractor* or the *Owner*, as the case may be, wishes to raise in relation to the *Consultant* arising out of the issues in dispute in the arbitration.

8.3.5 The *Owner* and the *Contractor* agree that the *Consultant* may elect, within ten (10) days of receipt of the notice under paragraph 8.3.4, to become a full party to the arbitration under paragraph 8.3.3 if the *Consultant*:

.1 has a vested or contingent financial interest in the outcome of the arbitration;

.2 gives the notice of election to the *Owner* and the *Contractor* before the arbitrator is appointed;

.3 agrees to be a party to the arbitration within the meaning of the rules referred to in paragraph 8.3.3; and

.4 agrees to be bound by the arbitral award made in the arbitration.

8.3.6 If an election is made under paragraph 8.3.5, the *Consultant* may participate in the appointment of the arbitrator and, notwithstanding the rules referred to in paragraph 8.3.3, the time period for reaching agreement on the appointment of the arbitrator shall begin to run from the date the respondent receives a copy of the notice of arbitration.

8.3.7 The arbitrator in the arbitration in which the *Consultant* has elected under paragraph 8.3.5 to become a full party may:

.1 on application of the *Owner* or the *Contractor*, determine whether the *Consultant* has satisfied the requirements of paragraph 8.3.5, and

.2 make any procedural order considered necessary to facilitate the addition of the *Consultant* as a party to the arbitration.

8.3.8 For any matter that is the subject of an adjudication under the *Construction Act*, unless otherwise required by the adjudicator, the following shall apply:

.1 Any adjudication proceeding shall take place in the City of Toronto; and

.2 Where a matter subject to adjudication is:

(i) in respect of amounts equal to or less than $100,000 of the *Contract Price*, the parties agree that, unless otherwise required by the adjudicator, only written submissions shall be made by the parties.

(ii) in respect of amounts greater than $100,000 of the *Contract Price*, the parties may seek to make oral submissions to the adjudicator, subject to the adjudicator's approval."

(gg) GC 8.4 RETENTION OF RIGHTS

(i) <u>Delete</u> paragraph 8.4.2 and replace it with the following:

"8.4.2 Nothing in Part 8 – DISPUTE RESOLUTION shall be construed in any way to limit a party from asserting any statutory right to

adjudication, or any statutory right to a lien, under applicable legislation of the jurisdiction of the *Place of the Work* and the assertion of such rights by initiating adjudication or judicial proceedings is not to be construed as a waiver of any right that party may have under GC 8.3 – NEGOTIATION, MEDIATION AND ARBITRATION to proceed by way of arbitration to determine the merits of the claim upon which such claim to adjudication or to a lien is based."

(ii) Add new paragraph 8.4.3:

"8.4.3 If the *Owner* gives the *Notice in Writing* described in GC 8.3 to have a dispute resolved by arbitration, the *Contractor* agrees that this paragraph 8.4.3 shall be construed as a formal consent to the stay of any lien proceedings until an award is rendered in the arbitration or such dispute is otherwise resolved between the parties. In no event shall the *Contractor* be deprived of its right to enforce its lien against the *Project* should the *Owner* fail to satisfy any arbitral award against it in full on the dispute in respect of which the lien proceedings were commenced. Nothing in this paragraph 8.4.3 shall prevent the *Contractor* from taking the steps required by the construction lien legislation at the *Place of the Work*, to preserve and/or perfect a lien to which it may be entitled."

(hh) GC 9.1 PROTECTION OF WORK AND PROPERTY

(i) Delete subparagraph 9.1.1.1 in its entirety and substitute the following:

"9.1.1.1 errors in the *Contract* Documents which the *Contractor* could not have discovered applying the standard of care described in paragraph 3.12.1."

(ii) Delete paragraph 9.1.2 in its entirety and substitute the following:

"9.1.2 Before commencing any *Work*, and if applicable, the *Contractor* shall determine the locations of all underground utilities and structures indicated in the *Contract Documents* or that are discoverable by applying to an inspection of the *Place of the Work* the degree of care and skill described in paragraph 3.12.1."

(iii) Add new paragraph 9.1.5 as follows:

"9.1.5 The *Contractor* shall neither undertake to repair and/or replace any damage whatsoever to the *Work* of *Other Contractor*s, or to adjoining property, nor acknowledge the same was caused or occasioned by the *Contractor*, without first consulting the *Owner* and receiving written instructions as to the course of action to be followed from either the

Owner or the *Consultant*. However, where there is danger to life or public safety, the *Contractor* shall take such emergency action as it deems necessary to remove the danger, and to protect the *Owner*'s property."

(ii) GC 9.2 -TOXIC AND HAZARDOUS SUBSTANCES AND MATERIALS

(i) Delete the wording in GC 9.2 in its entirety and replace with the following:

"9.2.1 Prior to the *Contractor* commencing the *Work*, the *Owner* shall:

.1 take all reasonable steps to determine whether any toxic or hazardous substances or materials are present at the *Place of the Work*, and

.2 provide the *Contractor* with a written report with respect to any such substances or materials, which report will form part of the *Contract Documents*.

9.2.2 If the *Contractor* discovers at the *Place of the Work* any toxic or hazardous substances or materials which are not described in the *Contract Documents*, the *Contractor* shall immediately notify the *Owner* of the presence of such substances and materials and take all reasonable steps, including stopping all or any relevant portion of the *Work*, to ensure that no person suffers injury, sickness or death and that no property is injured or destroyed as a result of exposure to or the presence of such substances or materials, and, for the purposes of paragraph 9.2.3, such circumstance shall be dealt with as a change to the *Work* in accordance with the provisions of Part 6 – CHANGES IN THE WORK with respect to any adjustment to the *Contract Time*.

9.2.3 As part of the *Work*, the *Contractor* shall be responsible for taking all necessary steps, in accordance with all *Applicable Law*, to dispose of, store or otherwise render harmless toxic or hazardous substances or materials which are described in the *Contract Documents*, as well as any other toxic or hazardous substances or materials which are referred to in paragraph 9.2.2.

9.2.4 The *Contractor* shall not permit any person performing any part of the *Work* to introduce to the *Place of the Work* any toxic or hazardous substances or materials without the prior written consent of the *Owner*. The *Contractor* shall require all persons performing any part of the *Work* involving any such substances and materials to comply with all *Applicable Law* regarding the safe use, handling and disposal of such substances and materials.

9.2.5 Notwithstanding any provision to the contrary in the *Contract Documents*, the *Contractor* shall indemnify and hold harmless the *Owner*,

and the *Consultant*, and their respective agents, consultants, officers, directors and employees, from and against any and all claims, demands, losses, costs, damages, actions, suits or proceedings arising out of or resulting from any discharge, escape, emission, leak, deposit, dispersion, or migration into the environment (for the purposes of this GC 9.2, "***Release***"), or threatened *Release*, of any toxic or hazardous substances or material, which has or may have an adverse effect upon the environment or human health or safety and which is connected, in any way, with the performance of the *Work* in any of the following circumstances: (i) where the *Release* or threatened *Release* is due to the *Contractor*'s failure to comply with the provisions of paragraph 9.2.2, (ii) where any such substances or materials are required to be dealt with as part of the *Work* as provided in paragraph 9.2.3 and the *Release*, or threatened *Release*, is due to the fault or negligence of the *Contractor*, any *Subcontractor* or *Supplier*s, or anyone for whom they are responsible at law, or due to the failure of any of them to comply with any applicable legal and regulatory requirements in respect of such substances or materials, or (iii) where the *Release*, or threatened *Release*, is in relation to any other such substances or materials which have been brought or introduced to the *Place of the Work* by anyone performing the *Work*. In the event of any Release, or threatened Release, described in subparagraphs (i), (ii) or (iii) above, the *Contractor* shall immediately notify the *Owner* of such event and shall take all steps, at its cost, to ensure that no person suffers injury, sickness or death and that no property is injured or destroyed as a result of the *Release* or threatened *Release* and to remedy such circumstance as soon as reasonably practicable."

(jj) GC 9.4 CONSTRUCTION SAFETY

(i) <u>Delete</u> GC 9.4 CONSTRUCTION SAFETY in its entirety and replace it as follows:

GC 9.4 CONSTRUCTION SAFETY

9.4.1 The *Contractor* acknowledges that it is a "constructor" within the meaning of the *OHSA* and the *Contractor* undertakes to carry out the duties and responsibilities of a constructor with respect to the *Work*. The *Contractor* shall be responsible for establishing, initiating, maintaining, and supervising all health and safety precautions and programs in connection with the performance of the *Work* in accordance with the applicable health and safety legislation, which shall include developing a health and safety plan specific to the *Place of the Work* and which conforms to the *Owner*'s occupational health and safety, infection prevention and control and emergency requirements at the *Place of the Work* (the "***HS Plan***"). Further, the *Contractor* shall be responsible for maintaining and supervising the *HS Plan* throughout the performance of the *Work*. Prior to commencement of the *Work*, the *Contractor* shall

submit to the *Owner* a copy of the Notice of Project filed with the Ministry of Labour in respect of the *Work*. The *Contractor* shall indemnify and hold harmless the *Owner* and the *Consultant* from any liability for claims, damages or penalties, including reasonable legal fees to defend any offences arising from the *Contractor's* failure to comply with such duties and responsibilities. In cases where the *Owner*'s own forces or *Other Contractors* are performing work at the *Place of the Work*, and do not have separate and defined work areas covered by a separate Notice of Project filed with the Ministry of Labour, the *Owner* will contractually require such forces or *Other Contractors* to comply with the *HS Plan* and overall directions and instructions respecting health and safety matters. For clarity, the *Contractor* shall be responsible as constructor for such *Owner* forces and *Other Contractors* and shall have the authority to remove such other forces or *Other Contractors* from the *Place of the Work* should they fail to comply with the *Contractor's* directions or instructions respecting its *HS Plan*.

9.4.2 The *Contractor* shall comply with (and cause the *Contractor Personnel* to comply with) (i) all health and safety precautions and programs established at the *Place of the Work*, (ii) all rules, regulations and practices required by the applicable health and safety legislation, and (iii) any safety regulations or directives issued in writing by or on behalf of the *Owner* in respect of the *Project* including, without limitation, in respect of infection control.

9.4.3 Nothing in this *Contract* shall affect the determination of liability under the applicable health and safety legislation."

(kk) GC 9.5 MOULD

(i) <u>Delete</u> paragraph 9.5.3.3 in its entirety and <u>replace</u> with the following:

"9.5.3.3 extend the *Contract Time* for such reasonable time as the *Consultant* may recommend in consultation with the *Contractor*. If, in the opinion of the *Consultant*, the *Contractor* has been delayed in performing the *Work* and/or has incurred additional costs under subparagraph 9.5.1.2, the *Owner* shall reimburse the *Contractor* for reasonable direct costs incurred as a result of the delay and as a result of taking those steps, and"

(ll) GC 10.1 TAXES AND DUTIES

(i) <u>Add</u> the following to the end of paragraph 10.1.2:

"The *Contractor* shall provide the *Consultant* with a detailed statement, acceptable to the *Consultant*, verifying the increase or decrease to the *Contract Price* on account of tax or duty changes. For certainty, there shall be no increase or decrease in the *Contract Price* as a result of any inability

by the *Contractor* or any *Subcontractor* to recover its own GST/HST expenses by means of credits, rebates or refunds."

(ii) Add new paragraphs 10.1.3, 10.1.4, 10.1.5, 10.1.6, 10.1.7 and 10.1.8 as follows:

"10.1.3 The *Value Added Taxes* are in addition to the *Contract Price* and shall be computed and disclosed separately on each *Proper Invoice* in accordance with the requirements of the *Excise Tax Act* (Canada) and the regulations made thereunder. This amount will be paid to the *Contractor* in addition to the amount certified for payment under this *Contract* and will therefore not affect the *Contract Price*. The *Contractor* shall further disclose on each *Proper Invoice* the *Value Added Taxes* registration number of the *Contractor* together with all of the other details required by the *Excise Tax Act* (Canada) and the regulations made thereunder to enable the *Owner* to recover such *Value Added Taxes* by way of credit, rebate or refund.

10.1.4 The *Contractor* shall report and remit to the appropriate taxing authority all taxes, including *Value Added Taxes* and shall, if requested by the *Owner*, provide to the *Owner* appropriate documentary evidence of such remittance within fifteen (15) days of such request.

10.1.5 The *Contractor* shall take all reasonable measures requested by the *Owner* in relation to the performance of the *Work* for the purposes of minimizing the application of *Value Added Taxes*.

10.1.6 When an exemption or recovery of government sales taxes, customs duties or excise taxes, including *Value Added Taxes*, related to this *Contract* may be available to the *Owner*, the *Contractor* shall, at the request of the *Owner* or its agent, assist in the *Owner's* application for any exemption, credit, rebate, refund or other recovery of all such taxes and duties and all amounts recovered or exemptions obtained shall be for the sole benefit of the *Owner*.

10.1.7 The parties shall co-operate to minimize the impact of any tax increases or new taxes and take advantage of all tax reductions and avoid any double taxation.

10.1.8 If any payment made by the *Contractor* to the *Owner* in connection with this *Contract*, including any amount that may be awarded by a court, is deemed by the *Excise Tax Act* (Canada) to include any *Value Added Taxes*, the amount of such payment shall be increased by such additional amounts as may be necessary in order that the net amount of the payment, after such a deemed inclusion of *Value Added Taxes*, will equal the amount that would have been paid if there had been no such deemed inclusion of *Value Added Taxes*."

(mm) GC 10.2 LAWS, NOTICES, PERMITS AND FEES

(i) Add to the end of paragraph 10.2.3 as follows:

"In the performance of the *Work* the *Contractor* will fulfill all requirements of the applicable municipality or any utility or other authority with jurisdiction over the *Work*, and will co-ordinate the work of any utility or other authority (whether on or off the *Work Site*) with the *Work* of this *Contract* and avoid any extra cost to the *Owner*."

(ii) At paragraph 10.2.4, add the following to the end:

"The *Contractor* shall be deemed to be familiar with the laws, ordinances, rules, regulations and codes relating to the *Work* and if the *Contractor* fails to give the said notices, the *Contractor* shall bear all costs arising out of the *Contractor's* actions. The *Contractor* shall notify the applicable Chief Building Official of the readiness, substantial completion, and completion of the stages of construction set out in the Ontario *Building Code Act* or other such legislation applicable to the *Place of the Work*. The *Contractor* shall be present at each site inspection by an inspector as applicable under the Building Code legislation at the *Place of the Work*."

(iii) Delete from the first line of paragraph 10.2.5 the word, "The" and substitute the words: "Subject to paragraph 3.12.1, the".

(iv) In paragraph 10.2.6, delete the words "knowing it to be".

(v) Add the following new paragraph 10.2.8:

"The *Contractor* shall furnish all certificates that are required or given by the appropriate governmental authorities as evidence that the *Work*, as installed, conforms with the laws and regulations of authorities having jurisdiction, including certificates of compliance for the *Owners'* occupancy or partial occupancy."

(nn) GC 10.4 WORKERS' COMPENSATION

(i) In paragraph 10.4.1, delete the words "applications for payment" and replace them with the words "*Proper Invoices*".

(oo) GC 11.1 INSURANCE

(i) At subparagraph 11.1.1.1, after the words "General liability insurance" at the beginning of the first line, add the following words:

", which shall be project-specific and which shall have limits of not less than $10,000,000 per occurrence, and an aggregate limit of not less than $10,000,000 within any policy year,"

(ii) At subparagraph 11.1.1.3, add the words "as applicable" after the word "*Work*".

(iii) Add as subparagraph 11.1.1.8:

".8 *Contractor's* Pollution Liability Insurance

Contractor's Pollution Liability insurance covering third-party injury (including personal and bodily injury and death) and property damage claims, and including medical payments, cleanup costs and loss of use, as a result of pollution conditions arising from the *Work*. Completed operations coverage (or, if on a claims made form, extended reporting coverage) will remain in effect for no less than 6 years after *Ready-for-Takeover*. The *Owner* and the *Consultant*, as well as *Subcontractors* and their trades, will be named as additional insureds and (if on a claims made form) the insurance will have a retroactive date before the commencement of the *Work*. The limits of the insurance will not be less than / $5,000,000 per occurrence (or claim) and $5,000,000 in the aggregate, and with such limits dedicated to the *Project*. The insurance shall include, without limitation, coverage for (or if such coverage is not included in such insurance, separate insurance will be arranged by and through *Subcontractors* providing any part of the *Work* which pertains, with respect to the same period and limits (and with the *Owner*, the *Consultant* and the *Contractor* named as additional insureds), for):

(1) Fungi and Fungal Derivatives commonly referred to as mould, covering third-party injury (including personal and bodily injury and death) and property damage, and including Medical Payments as well as any other cost, loss or expense , arising directly or indirectly from: (a) the actual, alleged or threatened inhalation of, ingestion of, contact with, exposure to, existence of, presence of, spread of, reproduction, discharge or other growth of any "fungi" or "spores" however caused, including costs or expenses incurred to prevent, respond to, test for, monitor, abate, mitigate, remove, cleanup, contain, remediate, treat, detoxify, neutralize, assess or otherwise deal with or dispose of "fungi" or "spores ", and (b) any supervision, instructions, recommendations, warnings, or advice given or which should have been given in connection with (a) above, as well as coverage for any obligation to pay damages, share damages with or repay someone else who must pay damages because of any such injury or damage. In respect of such coverage:

"fungi" includes, but is not limited to, any form or type of mould, yeast, mushroom or mildew whether or not allergenic, pathogenic or toxaemic, and any substance, vapour or gas produced by, emitted from or arising out of any "Fungi" or "Spores" or resultant mycotoxins, allergens, or pathogens.

"spores" include, but are not limited to, any reproductive particle or microscopic fragment produced by, emitted from or arising out of any "fungi".

(2) Asbestos, covering third party injury (including personal and bodily injury and death) and property damage, and including medical payments as well as any other cost, loss or expense, directly or indirectly caused by, resulting from or in consequence of, or in any way involving asbestos, or any materials containing asbestos in whatever form or quantity.

If the period and limits of the coverage set forth in this subparagraph 11.1.1.8, or the breadth of coverage set forth in subparagraph 11.1.1.8 (1) or (2), is not available in markets utilized by reputable insurance brokers experienced in the placement of coverage for similar risks, or is not available upon reasonable commercial terms in such markets, then *Contractor* may propose alternate insurance specifications, which are prudent in such circumstances, for the approval of the *Owner* (acting reasonably), in which case the *Contractor* will provide and maintain (or arrange to be provided and maintained) the insurance stipulated by such approved specifications."

(pp) New GC 11.2 CONTRACT SECURITY

(i) Add new GC 11.2 CONTRACT SECURITY as follows:

"GC 11.2 CONTRACT SECURITY

11.2.1 The *Contractor* shall, prior to the commencement of the *Work*, provide to the *Owner* a performance bond and labour and material payment bond, each in an amount equal to fifty percent (50%) of the *Contract Price*.

11.2.2 If the *Contract Documents* require surety bonds to be provided, such bonds shall be issued by a duly licensed surety company authorized to transact the business of suretyship in the province or territory of the *Place of the Work* and shall be maintained in good standing until the fulfillment of the *Contract*. The form of such bonds shall be in accordance with the latest edition of the CCDC approved bond forms.

11.2.3 Where the *Project* is in respect of a "public contract" as defined in the *Construction Act*, the *Contractor* shall furnish to the *Owner* (i) a labour and material payment bond and (ii) a performance bond, each in accordance with the requirements set out in the *Construction Act* and to the *Owner's* satisfaction."

(qq) GC 12.1 – READY-FOR-TAKEOVER

(i) Amend subparagraph 12.1.1.3 by adding the words "has been completed by the *Contractor*" at the end.

(ii) Delete subparagraphs 12.1.1.4 to 12.1.1.8 in their entirety and replace them with the following:

".4 Evidence that the *Contractor* is in good standing with Workplace Safety and Insurance Board and any other workers' compensation legislation applicable at the *Place of the Work*.

.5 Statement indicating reconciliation of all *Change Orders* or claims under the *Contract*.

.6 Evidence that each room of the *Project* is ready for its intended use.

.7 Any other materials or documentation required to be submitted under the *Contract*, together with written proof acceptable to the *Owner* and the *Consultant* that the *Work* has been substantially performed in accordance with the requirements of all municipal, government and utilities authorities having jurisdiction.

(iii) Amend paragraph 12.1.2 by deleting the words "any prerequisites set forth in paragraphs 12.1.1.3 to 12.1.1.6" with the words "the prerequisites set out in subparagraph 12.1.1.3".

(rr) GC 12.2 EARLY OCCUPANCY BY THE OWNER

(i) Delete subparagraphs 12.2.3.2 and 12.2.3.3 in their entirety and replace them as follows:

"12.2.3.2 The *Owner* shall, at any and all times, have the right to enter, occupy and use the *Work* in whole or in part before completion of the *Contract*. Such entry, occupation or use shall not be considered as acceptance of the *Work* nor in any way relieve or limit the responsibilities and liabilities of the *Contractor* under the *Contract* nor affect the warranty period.

12.2.3.3 For certainty, and notwithstanding occupancy by the *Owner* of a part or entirety of the *Work* before *Ready-for-Takeover* has been attained:

.1 the *Contractor* shall continue to be liable for the care of such part or entirety of the *Work*; and

.2 the warranty period shall be as set out in paragraph 12.3.1 of GC 12.3 – WARRANTY."

(ii) Delete paragraph 12.2.4 in its entirety and replace it with the following:

"12.2.4 Without limiting the rights of the *Owner* otherwise set out herein, upon *Substantial Performance of the Work* but prior to *Ready-For-Takeover*, the *Owner* shall be entitled to take complete possession of the *Work* and the *Contractor's* access to, or continuing presence at, the *Work Site* shall be for the sole purpose of achieving *Ready-For-Takeover* and *Total Completion* and performing its obligations under the *Contract* which arise subsequent to *Substantial Performance of the Work* (including the *Contractor's* obligations under GC 12.3 - Warranty); provided that such access or continuing presence by the *Contractor* shall not unreasonably interfere with the use or operation of the *Project* by the *Owner*, and the *Contractor*, in completing its obligations under the *Contract*, shall, at its own cost, take all reasonable measures to minimize the effect thereof on such use or operation."

(ss) GC 12.3 WARRANTY

(i) Delete from the first line of paragraph 12.3.2 the word, "The" and substitute the words: "Subject to paragraph 3.12.1, the".

(ii) Delete paragraph 12.3.3 in its entirety and insert the following:

"12.3.3 The *Contractor* shall, at its expense, promptly correct defects or deficiencies in the *Work* which appear prior to and during the warranty periods specified in the *Contract Documents*. The *Contractor* shall remain responsible for the correction of any such defects or deficiencies, notwithstanding the work required to effect such correction commences after or continues beyond the end of the warranty periods."

(iii) Add the following words at the end of paragraph 12.3.6:

"The *Contractor* shall remain jointly liable with the manufacturer to the *Owner* with respect to such *Products* warranties to the extent required in the *Contract Documents*, notwithstanding any limitation in the manufacturer's warranty."

(iv) Add new paragraphs 12.3.7 to 12.3.9 as follows:

"12.3.7 The *Contractor* agrees that the *Contractor* is able to perform the *Work* and the *Contractor* warrants the *Work* in accordance with the *Contract Documents*.

12.3.8 The *Contractor* shall, upon receiving notice of any defect or deficiency in the *Work*, commence the correction of such defect or deficiency within two (2) *Working Days* (or as otherwise agreed with the *Owner*) at such times that are convenient to the *Owner* except that, if any such defect or deficiency is of a nature which prevents or hinders, or is likely to prevent or hinder, patient care, comfort or safety, or any life

safety, security or other material building system, such correction shall be carried out immediately. The correction of all defects and deficiencies shall be carried out in a manner to minimize any interference or disruption to patient care, comfort and safety. If the correction of any defect or deficiency is likely to disrupt or interfere with patient care, comfort or safety or any life safety, security or other material building system, the *Owner* shall be entitled to effect any temporary corrective action as the *Owner* shall deem appropriate and charge the cost thereof to the *Contractor*. If the carrying out of the correction of any defects or deficiencies entails overtime work on the part of the *Contractor*, additional charges for overtime work shall be borne by the *Contractor*. Prior to the expiry of the warranty period, the *Owner* reserves the right to carry out a detailed and exhaustive inspection of the work for the purpose of establishing a final deficiency list (for the purposes of this paragraph 12.3.8, referred to as "***Punch List***"). The *Contractor* shall promptly correct, at the *Contractor's* expense, any defects or deficiencies in the *Work* noted in the *Punch List*.

12.3.9 Prior to the application for final payment under paragraph 5.5.1, the *Contractor* shall assign to the *Owner* the benefit of all guarantees and warranties for all *Products* and services used or incorporated in the *Work* and shall ensure that such an assignment is also effected by all *Subcontractors*, *Suppliers* or *Consultants* from whom the same have been obtained."

(tt) GC 13.1 INDEMNIFICATION

(i) Replace the reference in subparagraph 13.1.2.2 to "$2,000,000" to "$5,000,000".

(uu) GC 13.2 WAIVER OF CLAIMS

(i) Subparagraph 13.2.3.4, delete the definition of "Substantial defects or deficiencies" and replace with the following:

"Substantial defects or deficiencies" means those defects or deficiencies in the *Work* where the reasonable cost of repair of such defects or deficiencies exceeds:

.1 if the *Contract* Price is $2 million or less, the sum of $50,000, before *Value Added Taxes*;

.2 if the *Contract* Price exceeds $2 million, the sum of $100,000, before *Value Added Taxes*.

In any event, "substantial defects or deficiencies" shall include defects or deficiencies in the *Work* which affect the *Work* to such an extent or in such

a manner that a significant part or the whole of the *Work* is unfit for the purpose intended by the *Contract Documents*."

(ii) Delete paragraphs 13.2.4, 13.2.5 and 13.2.10.

(vv) New PART 14 OTHER PROVISIONS

(i) Add new PART 14 OTHER PROVISIONS as follows:

"PART 14 OTHER PROVISIONS

GC 14.1 WORK PLAN

14.1.1 In addition to the obligations regarding the *Project Schedule*, prior to commencing any *Work* at the *Place of the Work*, including mobilizing any labour or equipment at the *Place of the Work*, or entering into any part of the hospital, the *Contractor* will deliver to the *Owner* and obtain the *Owner's* approval for a work plan (for the purposes of this GC 14.1, referred to as the "***Work Plan***") clearly identifying:

.1 any *Work* activity that may impact or interfere with the on-going operation of the hospital, including interference to patients, staff or visitors, including a description of the nature, timing and extent of interference;

.2 the steps the *Contractor* intends to take to minimum the extent of such interference;

.3 any temporary measures that the *Owner* will be required to take to accommodate the interference; and

.4 any specific reporting relationships between the *Contractor* and the *Owner's* staff required to coordinate the interference.

14.1.2 Prior to delivering a *Work Plan*, the *Contractor* will consult with the *Owner* and, upon reasonable request, the *Owner* will make appropriate staff available for such consultation, to determine the *Work Plan* that minimizes interference to the hospital at the *Place of the Work*.

14.1.3 The *Work Plan* may be developed, delivered and approved in stages, as the *Work* is planned and progresses, beginning, for example, with the *Contractor's* detailed investigation of the hospital at the *Place of the Work*.

14.1.4 With respect to any interruption of existing utilities that provide services to the hospital at the *Place of the Work*:

.1 The *Contractor* will give a minimum of twenty (20) *Working Days'* advance written notice to the *Owner* and obtain written authorization to proceed from the *Owner's* representative prior to any interruption of existing services including, but not limited to, water, sewer, gas, medical gas systems, sprinklers, HVAC, power and electric, fire alarms, communication and security systems. The *Owner* may order the *Contractor* to stop the *Work* at any time due to emergency conditions and require required services to restart. The *Owner* may also order the *Contractor* to stop the *Work* at any time if any aspect of the *Work* affects or threatens to affect the continuous operation of the hospital and its facilities and operations at the *Place of the Work*.

.2 The *Owner* will cooperate with the *Contractor*, at no cost to the *Contractor*, in the shut down of services as is necessary to allow the *Contractor* to modify existing services and to perform the *Work*. If, however, as a result of defective materials or workmanship it is necessary for any shut downs to be repeated, any additional costs incurred by the *Owner*, including the cost of labour provided by the *Owner*, to repeat the shutdown and then re-connect the service, will be paid by the *Contractor*.

.3 The *Contractor* shall take measures to avoid triggering false alarms, including fire or security alarms, and will pay for any municipal costs charged to the *Owner* as a result of false alarms.

.4 The *Contractor* will, at its cost (including any overtime labour cost), provide the necessary coverage as required by applicable governmental authorities in the event of the loss of or lack of coverage of life safety systems.

.5 The *Contractor* will, at its cost (including any overtime labour cost), make service connections or modifications outside of normal working hours, or will provide temporary service connections, if such connections or modifications cannot be undertaken safely during normal working hours, or if such work would cause interruptions and interference with the *Owner's* normal health care operations in the hospital at the *Place of the Work* that are unacceptable to the *Owner*.

.6 The *Contractor* will carry out all final connections to existing operational systems under the direct supervision and as directed by the *Owner's* operational staff or authorized agent.

14.1.5 On a weekly basis, the *Contractor* shall provide the *Owner* with a look-ahead schedule in respect of the forthcoming 2 to 3 weeks, or for any other period or at any other interval as the *Owner* may reasonably request.

GC 14.2 OWNERSHIP OF MATERIALS

14.2.1 Unless otherwise specified, all materials existing at the *Place of the Work* at the time of execution of the *Contract* shall remain the property of the *Owner*. All *Work* and *Products* delivered to the *Place of the Work* or *Alternate Location* by or on behalf of the *Contractor* shall be the property of the *Owner.* Title shall be deemed to pass to the *Owner* upon delivery to the *Place of the Work* or an *Alternate Location*, as applicable, and upon such delivery the *Contractor* shall provide the *Owner* with an executed receipt clearly identifying the *Owner* as the owner of the subject *Products* together with any available identifying information for such *Products*, such as serial numbers. The *Contractor* shall promptly remove all surplus or rejected materials as its property when notified in writing to do so by the *Consultant* or the *Owner*."

END OF SUPPLEMENTARY CONDITIONS

1 SUMMARY OF WORK

1.1 Work covered under this Contract

.1 Work of this Contract includes labour, materials, equipment, services and other related expenses to execute complete construction work specified under Contract Documents.

.2 It is the Contractor's sole responsibility to examine the Construction Documents, Specifications and Drawings issued to establish/determine total scope of work.

.3 In accepting award of this Contract, Contractor hereby reaffirms that it is fully informed regarding all conditions affecting Work including its company's provincial taxes are in good standing and further accepts to complete Work for purpose intended in accordance with Contract Documents. Contractor hereby reaffirms that it does not and will not have any conflict of interest in executing work of this Contract.

1.2 Work Restrictions:

.1 Owner's Policy and Procedural Requirements

.1 Comply with the Owner's policies and procedural requirements prescribed in "Procedures for Construction, Renovation & Physical Plant Projects", see Appendix A, including, but not limited to, personal conduct and behaviour, patient privacy, facility security, infection prevention and control, mechanical system interruptions, and work scheduling.

.2 Conduct all work in accordance with the most current version of CAN/CSA-Z317.13. Construction area is designated as follows:

Population Risk Group	Construction Activity	Preventive Measure Type
Group 4	Type C	III / IV

.3 This includes, but is not limited to, full sealed containment of the renovation zone and a negative pressure (-0.03 in WC) environment.

.4 As determined by the Owner's policies, immediately correct all unsafe conditions that are identified within the active facility that are a result of, or related to, the construction work activities.

1.3 Designated Substances

.1 A Designated Substance Report has been performed by Pinchin Ltd. Refer to the Appendices for project-specific Designated Substance and Hazardous Materials Assessment reports:

.2 Prepare the site for safe construction operations and safely remove and dispose of designated substances and hazardous materials in areas affected by the Work and in accordance with governing legislation and the requirements of authorities having jurisdiction.

.3 Information on existing conditions is included in the Bid Documents for information purposes only, and does not form part of the Contract Documents.

.4 The Owner and Consultant assume no responsibility for the scope and accuracy of the information contained in the documents listed as a part of this sub-section.

.5 The Contractor shall be responsible for conducting an on-site evaluation of conditions which can be observed and for correlation of these conditions with the information included under this Section.

.6 Information contained in documents listed her may be used by the Contractor to assist in an assessment of existing conditions. Evaluation of the information shall remain the responsibility of the Contractor.

1.4 Work Provided By Owner or Performed Under Separate Contracts

.1 The term "NIC" means that work of this Project which is not being performed or provided by the Contract; the term means "Not In This Contract" or "Not a Part of The Work to be Performed or Provided by The Contractor".

.2 "NIC" work is specified and/or indicated on the Drawings as an aid to the Contractor in scheduling the amount of time and materials necessary for the completion of the Contract.

2 SPECIAL PROJECT PROCEDURES

2.1 Existing premises outside of the Area of Work will remain operational during the Work. Execute Work to cause minimum interference with activities in existing premises and maintain maximum safety to occupants. Take reasonable measures to minimize and control noise, dirt, and dust during Work.

.1 Refer to the attached phasing diagrams indicating existing conditions, enabling works by the Owner, and proposed phasing of the Work.

.2 Provide a methodology for phasing and staging of the Work and indicating safety and fire escape routes for the occupants of the building during construction.

.3 All areas that are only available for demolition and construction activity after hospital operational hours are to be vacuumed and mopped at the end of each construction day for terminal clean by hospital to enable the hospital to resume regular business operations unimpeded each day.

2.2 Co-ordinate construction activities and use of premises with Owner.

2.3 Maintain operations of building services, data, telephone, and alarm. Ensure no interruptions of these services during execution of the Work.

2.4 Provide adequate protection against dust, water and other damages to Owner's electronic and computer equipment, fittings, and furniture. Use covers acceptable to the Owner. Remove protection after each work period.

2.5 Access to Area of Work

.1 Work shall be confined to Area of Work limits indicated on Drawings and/or within area defined by property lines.

.2 Assume responsibility for care, custody and control of Area of Work and perform work to extent covered in Contract Documents.

.3 Make good damage to existing Area of Work and existing building due to Work of this Contract within 24 to 48 hours of noted damage or defects to the satisfaction of the Owner.

.4 Maintain temporary entrances to areas of Work and provide enclosed hoardings as required. Maintain access to existing building service entrance(s) at all times.

.5 Work on Municipal property shall be carried out under regulations of respective Municipality and authorities having jurisdiction including without any limitations any associated fees, permits, insurance or bonding required.

.6 Access to the existing buildings, and access to the neighbouring properties, cannot be blocked or otherwise compromised. Provide a minimum of 14 days' notice to Owner and coordinate with Owner for any major disruptions that may impact access to hospital or surrounding community.

.7 Comply with the time frames/schedule of the hospital loading dock supervisor for all materials delivery to site and ensure loading bays are clear of materials/equipment.

2.6 Commencement of Work

.1 Make all required submittals, receive all reviewed submittals, and marshal all required materials off-site prior to commencing Work on-site.

.2 The first on-site Work shall be the construction of the hoarding.

2.7 No Smoking Policy

.1 Cooperate, respect and comply with the Owner's no smoking policy requirements.

.2 Ensure that Contractor's employees, sub-contractors, and suppliers, performing work on Site on Contractor's behalf, are instructed to comply with the Owner's no smoking policy requirements.

.3 Comply with local By-Law and regulations or any authorities having jurisdiction.

3 SPECIFICATIONS

3.1 Specifications are not intended as detailed description of installation methods but serve to indicate particular requirements in completed Work.

3.2 Where Contract Documents do not provide sufficient information for complete installation of item, then as supplement, comply with manufacturer's written instructions for quality of work.

3.3 Portions of Specifications are written in short form. Therefore, it shall be understood that where item of Work is stated in heading followed by material, equipment, component, or operation, words "shall be", "shall consist of" or similar words or phrases are implied which denote supply, fabricate and supply, install, provide or commission of such materials, equipment or operations for component of Work designated by heading.

3.4 Where the Contract Documents refer to the singular, provide as many as required to complete Work. Words used in one gender only shall mean females and as well as males and conversely.

3.5 Drawings, Lists or Schedules of Items are intended to show scope and arrangement of work. For location of item described refer to such Drawings, Lists or Schedules unless location stipulated in Specifications.

3.6 Wherever words "acceptable", "approved", "reviewed", "satisfactory", "selected", "directed", "designated", "permitted", "inspected", "instructed", "clarification", "required", "report", "submit", "obtain", "consult", "advise", or similar words or phrases are used in Standards or in Contract Documents, it shall be understood that, unless context provides otherwise words "by/to/with/from the Consultant" shall follow them as applicable.

4 DIVISION OF WORK

4.1 Work specified in the Specifications is divided into Sections for reference purposes only. Division of work between Contractor and Subcontractors is the Contractor's responsibility. The Owner and Consultant assume no responsibility to act as an arbitrator to establish subcontract limits between Sections or Divisions of the Work.

5 REFERENCE STANDARDS

5.1 Conform to latest date of issue of referenced standards in effect on date of submission of bids, except where a specific date or issue is specifically noted.

6 CONSTRUCTION SCHEDULE

6.1 Submit a critical path construction schedule indicating milestone dates of major activities of the Work. Provide sufficient details of critical events and their inter-relationship for successful performance within the contract time.

6.2 Submit schedule within 15 days after award of Contract.

7 CASH ALLOWANCES

7.1 Cash allowances, unless otherwise specified, cover net cost to Contractor of services, products, construction machinery and equipment, freight, handling, unloading, storage, installation and other authorized expenses incurred in performing the Work.

7.2 The Contract Price, and not cash allowance, includes Contractor's overhead and profit in connection with such cash allowance.

7.3 The Owner reserves the right to call competitive tenders for portions of the work to be paid for out of any or all cash allowances. The relationship of the Contractor and the trades performing portions of the work to be paid out of cash allowances shall be such as between the Contractor and his Subcontractors.

7.4 Make expenditures out of the cash allowance at the sole discretion of the Owner and only on receipt of a Change Order signed by the Owner and Consultant.

7.5 Unexpended amounts of cash allowances may be reallocated to other specific cash allowances at the sole discretion of the Consultant.

7.6 Unexpended amounts of cash allowances shall be deducted from the Contract Price at completion of the Work.

7.7 Include in the Contract Price, the following cash allowances in lawful monies of Canada as follows:

.1 Unforeseeable Building Conditions.

.2 Testing and Inspection for Owner’s quality control. Engage an independent third party Agency as directed by Owner to conduct inspections and tests

TOTAL AMOUNT	$300,000.00

8 EXAMINATION OF EXISTING CONDITIONS

8.1 Submission of bid shall be deemed evidence that Contractor has examined the site and is familiar with conditions under which work will be done and obtained all information which may be necessary for proper execution of Contract.

8.2 Signing of Contract indicates acceptance by Contractor of conditions under which work will be done.

8.3 Extra payments will not be authorized for work that could have been determined by a careful examination of site and existing conditions.

9 EXAMINATION OF SURFACES DURING CONSTRUCTION

9.1 Before executing work against surfaces prepared by other Sections, examine such surfaces. Do not accept defective surfaces, or do any work to or on them, until the defects are remedied.

9.2 Commencement of work shall indicate acceptance of surfaces and responsibility concerning the conditions of same.

10 EXISTING SERVICES

10.1 Cut off, cap, divert or remove existing water, gas, electric and other services in areas being altered which are affected by the changes as required or as directed by the municipal authorities and the utility company concerned, and the Consultant. Protect and maintain active services to the existing building.

10.2 If required by the Consultant, prepare interference and/or installation drawings showing the work of the various Sections as well as the existing installation, and submit these drawings to the Consultant for review before the commencement of work.

11 SALVAGE AND DISPOSAL OF MATERIALS

11.1 Cut, disconnect, and detach items and materials designated to be removed.

11.2 All materials resulting from the demolition work except as otherwise specified or directed shall become the property of the Contractor.

11.3 Remove all material and debris from the site as quickly as possible and dispose of legally.

11.4 Burning of debris or selling of materials on the site will not be permitted.

12 FIRE SAFETY DURING CONSTRUCTION

12.1 Provide fire prevention and protection measures to existing building as required by all authorities having jurisdiction.

12.2 Maintain exits, including stairways and exterior doors to the outside. Provide acceptable alternative exits where an existing exit is blocked off or deleted due to construction activities.

12.3 Where access to an exit through construction area is absolutely necessary, clearly define, protect and separate access from the construction area by a smoke tight fire separation equivalent to minimum 3/4 hour fire resistance rating.

13 SAFETY MEASURES

13.1 Comply with the safety regulations of the Occupational Health and Safety Act and authorities having jurisdiction for the safety of the Work.

14 PROJECT MEETINGS

14.1 Schedule and administer project progress meetings throughout progress of work.

14.2 Distribute written notice of each meeting four days in advance of meeting date to Consultant and Owner.

14.3 Provide physical space and make arrangements for meetings.

14.4 Record minutes. Include significant proceedings and decisions. Identify 'action by' parties.

14.5 Reproduce and distribute copies of minutes within three days after each meeting and transmit to meeting participants, affected parties not in attendance, Consultant and Owner.

15 SUBMITTALS

15.1 Administrative

.1 Submit to Consultant submittals listed for review. Submit with reasonable promptness and in an orderly sequence so as to not cause delay in the Work.

.2 Work affected by submittal shall not proceed until review is complete.

.3 Review submittals prior to submission to Consultant. This review represents that necessary requirements have been determined and verified, or will be, and that each submittal has been checked and co-ordinated with requirements of the Work and Contract Documents.

.4 Verify field measurements and affected adjacent Work is co-ordinated.

15.2 Shop Drawings and Product Data

.1 Indicate materials, methods of construction and attachment or anchorage, erection diagrams, connection, explanatory notes and other information necessary for completion of Work.

.2 Adjustments made on shop drawings by Consultant are not intended to change Contract Price.

.3 Make changes in shop drawings as consultant may require.

.4 Submit one transparency and 4 white prints of shop drawings for each requirement requested in specification Sections and as Consultant may reasonably request.

.5 Submit 4 copies, unless otherwise noted, of product data sheets or brochures for requirements requested in specification Sections and as Consultant may reasonably request where shop drawings will not be prepared due to standardized manufacture of product.

15.3 Samples

.1 Submit samples for review as requested in respective specification Sections.

.2 Deliver samples prepaid to Consultant's business address.

15.4 Operating Maintenance Manuals

.1 Two weeks prior to Substantial Performance of the Work, submit to Consultant, three copies of operating and maintenance manuals.

.2 Manuals to contain operational information on equipment, cleaning and lubrication schedules, filters, overhaul and adjustment schedules and similar maintenance information.

.3 Bind contents in a three-ring, hard covered, plastic jacketed binder. Organize contents into applicable categories of work, parallel to specifications Sections.

16 AS BUILT DRAWINGS

16.1 Provide As-built drawings to show the final as-built condition.

16.2 Identify each drawing in lower right hand corner in letters at least 12 mm (½") high and as follows:

"AS-BUILT DRAWINGS. This drawing has been revised to show all systems and conditions as installed". [Signature of Contractor] and [Date]

16.3 Provide “AS BUILT DRAWINGS” white prints to Consultant for review. Transfer Consultant's comments to the CAD files. Return AutoCad drawings modified to “As Built” condition to Consultants on CD or DVD Rom.

16.4 Submit three (3) sets of final “AS BUILT DRAWINGS” white prints with Operating and Maintenance Manuals.

16.5 Submit full set of final “AS BUILT DRAWINGS” to Owner in digital format: AutoCAD and PDF files.

17 OWNER'S QUALITY CONTROL

17.1 Independent inspection/testing agencies may be engaged by Owner for purpose of inspecting and/or testing portions of Work. Costs shall be paid out of cash allowance.

17.2 Provide equipment required for executing inspection and testing by appointed agencies.

18 SITE SIGNS

18.1 Do not exhibit on the site other advertisements or signs other than those required by authorities having jurisdiction, unless otherwise approved by the Consultant, in writing.

19 CONSTRUCTION FACILITIES AND TEMPORARY CONTROLS

19.1 Co-ordination

.1 Co-ordinate with the building management use of temporary controls and facilities not provided under this Contract, including but not necessarily limited to material delivery, unloading and hoisting. Make prior arrangements and schedule use at times acceptable to the building management. Be responsible for payment for use of such facilities.

19.2 Installation/Removal

.1 Provide construction facilities and temporary controls in order to execute work expeditiously. Remove from site all such work after use.

19.3 Hoisting and Delivery

.1 Material unloading and hoisting will be restricted to after hours.

.2 Arrange for delivery and unloading of materials at areas designated by the building management. Do not interfere with vehicular traffic on the streets and pedestrian traffic on the sidewalks.

.3 One of the existing elevators, as designated by the building management, may be used for construction personnel and material hoisting. Do not overload the elevator beyond the rated capacity. Provide protective coverings for finish surfaces of cars and entrances. Be responsible for safe operation of the elevator and any damages resulted from its usage. Provide alternative means of hoisting if the elevator is of insufficient size and capacity for materials intended.

19.4 Security Provisions

.1 Maintain and conform to existing security provisions required by the building management. Do not compromise such provisions.

19.5 Hoarding and Barricades

.1 Erect hoarding and barricades to protect public, workers, public and private property from injury or damage. Provide lockable doors within hoarding for access to site by workers.

19.6 Weather Enclosures

.1 Provide weathertight closures to unfinished door and window openings, tops of shafts and other openings in floors and roofs.

.2 Close off floor areas where walls are not finished; seal off other openings; enclose building interior work area for temporary heat.

19.7 Parking

.1 Parking will not be provided. It is the responsibility of the Contractor to arrange parking for its staff and deliveries.

19.8 Temporary Partitions / Dust-Proof Barriers

.1 Erect dust-proof barriers between occupied and construction areas to prevent dissemination of dust. Extend from floor to slab ceiling if suspended ceiling are to be removed.

.1 Vacuum the area above false ceilings, including duct work and pipes prior to construction.

.2 Establish traffic control patterns which prevent construction dust from being tracked into occupied areas. Provide adhesive strips on floors to catch dust on shoes.

.2 Maintain and relocate protection until Work is complete.

19.9 Site Storage/Loading

.1 Confine the Work and operations of employees to limits indicated by Contract Documents. Do not unreasonably encumber premises with Products.

.2 Do not load or permit to be loaded any part of the Work with a weight or force that will endanger the Work.

19.10 Sanitary Facilities

.1 Existing facilities as designated may be used during construction period.

.2 Maintain in clean condition.

19.11 Water and Power Supply

.1 The Owner will provide and pay for a continuous supply of water, power for construction use as available from the existing facilities. Provide hoses, extensions, connections, and transformers as required for execution of the Work. Provide extra supply if the existing facilities are insufficient or not suitable for construction use.

.2 Arrange for connection with appropriate utility company and pay costs for installation, maintenance and removal.

19.12 Temporary Lighting

.1 Provide temporary lighting required during construction period, including attendance and maintenance.

.2 Maintain lighting at levels required by Sections doing the work.

19.13 Temporary Heating

.1 Provide temporary heating required during construction period, including attendance, maintenance and fuel.

.2 Construction heaters used inside building must be vented to outside or be non-flameless type. Solid fuel salamanders not permitted.

.3 Maintain temperatures at levels required by Sections doing the work.

.4 Ventilate heated areas and keep building free of exhaust or combustion gases.

19.14 Temporary Telephone

.1 Provide and pay for temporary telephones necessary for own use and use of Consultant and Owner.

19.15 Equipment/Tool/Materials Storage

.1 Provide and maintain, in clean and orderly condition, lockable areas for storage of tools, equipment and materials.

.2 Locate materials on site in manner to cause least interference with work activities.

19.16 Project Cleanliness

.1 Maintain the Work in tidy condition, free from accumulation of waste products and debris.

.2 Remove waste material and debris from site at end of each working day. Do not burn waste materials on site.

.3 Clean interior areas prior to start of finish work, maintain areas free of dust and other contaminants during finishing operations.

20 MATERIAL AND EQUIPMENT

20.1 Product and Material Quality

.1 Products, materials, equipment and articles incorporated in Work shall be new, not damaged or defective, and of best quality for purpose intended. If requested, furnish evidence as to type, source and quality of Products provided.

.2 Whenever Products are specified exclusively by trade name, manufacturer's name or by catalogue reference, use only those items, unless written approval for substitution is obtained from Consultant.

.3 Defective Products, will be rejected, regardless of previous inspections. Inspection does not relieve responsibility but is precaution against oversight or error. Remove and replace defective Products at own expense and be responsible for delays and expenses caused by rejection.

.4 Should any dispute arise as to quality or fitness of Products, decision rests strictly with Consultant based upon requirements of Contract Documents.

20.2 Storage, Handling and Protection

.1 Handle and store Products in manner to prevent damage, adulteration, deterioration, and soiling and in accordance with manufacturer's instructions when applicable.

.2 Store packaged or bundled Products in original and undamaged condition with manufacturer's seals and labels intact.

20.3 Manufacturer's Instructions

.1 Unless otherwise indicated in specifications, install or erect Products in accordance with manufacturer's instructions. Do not rely on labels or enclosures provided with Products. Obtain written instructions directly from manufacturers.

.2 Notify Consultant in writing, of conflicts between specifications and manufacturer's instructions, so that Consultant may establish course of action.

.3 Improper installation or erection of Products, due to failure in complying with these requirements, authorizes Consultant to require removal and reinstallation at no increase to Contract Price.

20.4 Workmanship

.1 Workmanship shall be best quality, executed by workers experienced and skilled in respective duties for which they are employed. Immediately notify Consultant if required Work is such as to make it impractical to produce required results.

.2 Do not employ any unfit person or anyone unskilled in their required duties.

.3 Decisions as to quality or fitness of workmanship in cases of dispute rest solely with Consultant, whose decision is final.

20.5 Concealment

.1 In finished areas, conceal pipes, ducts and wiring in floors, walls and ceilings, except where indicated otherwise.

.2 Before installation, inform Consultant if there is a contradictory situation. Install as directed by Consultant.

21 CONTRACT CLOSEOUT

21.1 Final Cleaning

.1 When the Work is Substantially Performed, remove surplus products, tools construction machinery and equipment not required for performance of remaining Work.

.2 Leave work broom clean before inspection process commences.

.3 Clean and polish glass, mirrors, hardware, wall tile, stainless steel, chrome, porcelain enamel, baked enamel, plastic laminate, mechanical and electrical fixtures. Replace broken, scratched or disfigured glass.

.4 Remove stains, spots, marks and dirt from decorative work, electrical and mechanical fixtures, furniture fitments, walls ceilings.

.5 Vacuum clean and dust building interiors, behind grilles, louvres, and screens.

.6 Wax, seal, shampoo or prepare floor finishes, as recommended by manufacturer.

.7 Broom clean and wash exterior walks, steps and surfaces.

.8 Remove dirt and other disfigurations from exterior surfaces.

21.2 Systems Demonstration

.1 Prior to final inspection, demonstrate operation of each system to Owner.

.2 Instruct personnel in operation, adjustment, and maintenance of equipment and systems, using provided operation and maintenance data as basis for instruction.

21.3 Documents

.1 Collect reviewed submittals and assemble documents executed by Subcontractors, suppliers, and manufacturers.

.2 Submit material prior to final application for payment.

.3 Submit three copies of Project Record Manual consisting of operation and maintenance data and one set of record (as-built) drawings white prints.

.4 Provide warranties fully executed and notarized.

.5 Execute transition of Performance Bond to warranty period requirements.

21.4 Inspection/Takeover Procedures

.1 Prior to application for certificate of Substantial Performance, carefully inspect the Work and ensure it is complete, that major and minor construction deficiencies are complete, defects are corrected, and building is clean and in condition for occupancy. Notify Consultant in writing, of satisfactory completion of the Work and request an inspection.

.2 During Consultant inspection, a list of deficiencies and defects will be tabulated. Correct same.

.3 When Consultant considers deficiencies and defects have been corrected and it appears requirements of Contract have been performed, make application for certificate of Substantial Performance.

.4 Conform to OAA/OGCA Document No.100 for takeover procedures.

.5 Submit a final statement of accounting giving total adjusted Contract Price, previous payments, and monies remaining due.

.6 Consultant will issue a final change order reflecting approved adjustments to Contract Price not previously made.

End of Section

Electronic Close-Out Guidelines

FACILITIES PLANNING & DEVELOPMENT

SEPTEMBER 22, 2021

Electronic Close-out Guidelines

Operation and Maintenance Manuals (O&Ms) and As-Builts

Below describes the requirements for the Operation and Maintenance Manuals (O&Ms) and the as-builts (record) requirements for the Facility Operations at SickKids. The O&Ms are intended to provide an understanding on how to operate and maintain the equipment & systems safely and efficiently. The O&Ms and as-builts shall be prepared by the contractors and reviewed by the consultants and commissioning authority (if applicable).

Requirements

Provide copies of equipment operating & maintenance manuals and as-built shop drawings in:

1. **Two (2)** soft copy formats; Soft copy documents shall follow electronic filing structure as stated in section **A.0** where applicable. Soft copy formats shall be provided **two (2)** separate USB drives supplied by the contractor.

2. **One (1)** hard copy format; Hard copy documents shall follow a modified structure as stated in section **B.0** where applicable. Hard Copy of the O&Ms shall be consolidated in hardcover "D" ring binders and each binder sized to include approximately 25% spare space for future data.

The as-builts drawings will be provided in accordance with the specifications and **SickKids Standards**.

Application

A.0 O&M & As-Built Folder Structure – Soft Copy (Electronic)

The Operation and Maintenance (O&M) Manuals shall be divided into dedicated folders for each discipline (Mechanical, Electrical, Architectural etc.), with each folder sub-divided into separate division folders that follow the latest CSI Masterformat division nomenclature. The following shall detail specifics on filing structure & required folder information:

A.1 Folder 1: Front-End Documents

This folder shall contain document(s) & folder(s) stating the following:

1. Project Name, SickKids Project Number, Consultant Project Number, Date

2. List Consultants, Contractors and Sub-Contractors names, address, telephone and fax numbers, main contact person & emergency contact (if applicable), email addresses and related CSI Masterformat division/sub-division.

3. Equipment manufacturer names and Local Supplier, address, telephone and fax numbers, main contact person & emergency contact (if applicable), email addresses, related CSI Masterformat division/sub-division.

4. All applicable building permits as issued for/during the project.

A.2 Folder 2: Operation and Maintenance Manuals

(ex. Architectural O&M, Mechanical O&M, Electrical O&M, etc.)

This folder shall contain clearly stated document(s) & folders (nomenclature based on CSI Masterformat divisions & sub-divisions) containing the following:

1. A standalone master table of contents in the folder: Lists division folder breakdown complete with sub-division details.

2. Parent Division folder(s) and dedicated sub-division(s) folder – see example Figure 1 below:

Figure 1

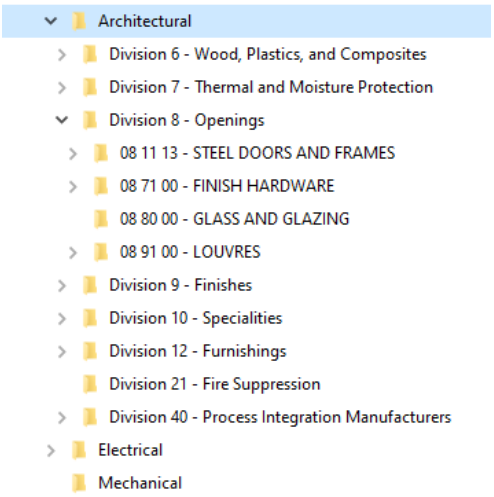

Figure 2

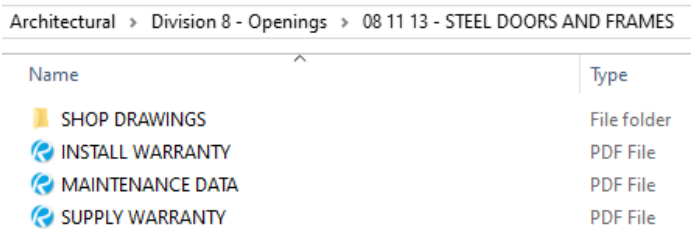

3. Each sub-division(s) folder shall contain, but not limited to the following details - Refer to Figure 2 example:

3a. *Shop Drawings*

1. Copy of "Reviewed' or Reviewed as Noted" shop drawing with the manufacturer's/supplier's name, address, telephone and fax numbers, main contact person, email addresses.

3b. *Test reports, start-up sheets and test certificates issued by the governing authority.*

3c. *Operating Information*

1. Operating instruction for the equipment and system components

2. Description of control strategy, include BAS sequence of operation where applicable

3d. *Maintenance Information*

1. Recommended maintenance practices and frequency for servicing the equipment

2. How to maintain and access the equipment

3. Tools required for maintenance and estimated time for maintenance

4. Complete parts list and part number

3e. *Troubleshooting Information*

1. Description of actions to be taken during and emergency or equipment failure

2. Step by step troubleshooting instruction

3. Safety protocol while troubleshooting

3f. *Performance Information*

1. Completed equipment and system start-up sheets. Provide blank sheets for future reference.

3g. *Copies of equipment and/or system specific warranties*

A.3 Folder 3: As-Built Drawings

The contractors or lead consultant will provide copies of as-built project drawings in both CADD & PDF formats. The CADD drawings shall conform in accordance with SickKids' drawing standards as stated in the **Master Instructions Document** and be broken into their parent disciplines where applicable; Architectural, Electrical, Mechanical etc.

1. Per discipline, provide **one** consolidated PDF set of project drawings in order according to project drawing list.

2. Per discipline, provide separate sub-folder of individual project drawings in order according to project drawing list.

B.0 O&M Binder Structure & As-Built Drawings – Hard Copy

The Operation and Maintenance (O&M) Manuals shall be divided into volumes for each discipline (Mechanical, Electrical, Architectural etc.), with each volume sub-divided into chapters that follow the same format & CSI Masterformat division nomenclature as stated in **A.2**.

B.1 O&M Structure

1. On the front cover & spine: Project Name, SickKids Project Number, Consultant Project Number, Date

2. Sheet(s) that indicates: List Consultants, Contractors and Sub-Contractors names, address, telephone and fax numbers, main contact person & emergency contact (if applicable), email addresses and related CSI Masterformat division/sub-division.

3. Sheet(s) that indicates: Equipment manufacturer names and Local Supplier, address, telephone and fax numbers, main contact person & emergency contact (if applicable), email addresses, related CSI Masterformat division/sub-division.

4. Printed copies of all applicable building permits as issued for/during the project on dedicated sheets.

5. Table of Contents and corresponding index tabs that follows the format as stated in section **A.2**

B.2 As-Built Drawings

The contractors or lead consultant will provide a printed hard copy of as-built project drawings. If applicable, all disciplines will be bound into one set unless noted otherwise & agreed upon with the assigned SickKids Project Manager. Sheet/drawing size should be confirmed prior to the application of substantial completion.

1. Per discipline, provide one complete set of project drawings in order according to project drawing list.

SICKKIDS Testing, Commissioning, Acceptance and Turnover (TCAT) Standard

Document Control

1.1	2017-12-04	Final draft edit and reformat and sent to Jeremy for stakeholder review	J. Thompson	A. Roylance

Reference Documents

CSA Z8001-13 Commissioning of Health Care Facilities for sample commissioning datasheets.

Contents

1 Introduction 1
1.1 Objectives 2
1.2 Benefits 3
1.3 The Commissioning (TCAT) Team 3
1.3.1 The Owner (SickKids) 4
1.3.2 The Commissioning Authority 5
1.3.3 The Design Consultant (DC) 6
1.3.4 The Contractor 7
1.4 Definitions 9
1.4.1 Primary Definitions 9
1.4.2 Additional Definitions 10
1.4.3 Acronym Used in the TCAT Standard 13
2 Testing, Commissioning, Acceptance and Turnover (TCAT) 15
2.1 General Requirements 15
2.2 Systems 15
2.3 Testing 17
2.3.1 Pre-functional Testing 18
2.3.2 Start-up Testing 18
2.3.3 Functional Performance and Integration Testing 19
2.3.4 Seasonal Performance Testing 21
2.4 Commissioning 23
2.4.1 Functional Performance Commissioning 23
2.4.2 Integrated System Commissioning 24
2.4.3 Pre-Acceptance Commissioning (Owner) 25
2.4.4 Seasonal Performance Commissioning 25
2.5 Acceptance 26
2.5.1 Verify Documentation 26
2.5.2 Testing and Commissioning Report(s) (T&C Report) 27
2.5.3 As-Built (Record) Drawings 27
2.5.4 Operation and Maintenance Manuals (O&M Manuals) 28
2.5.5 Systems Operating Manual 28
2.5.6 Systems and Equipment Training 29

2.5.7 Spare Parts 30
2.5.8 Warranty 30
2.5.9 Acceptance 30
2.6 Turnover 32
2.6.1 Activation 33
2.6.2 Independent Testing 33
2.6.3 Acceptance 33
2.6.4 Go-Live 33
A TCAT Test Forms 34
A.1 Test Form Categories 35
A.1.1 Mechanical Test Forms 35
A.1.2 Electrical Test Forms 35
A.2 Pre-functional Tests 35
A.3 Start-up Tests 35
A.4 Functional Performance and Integration Tests 36
B Hydronic and Air Balancing 37
B.1 Typical Project Structure 37
B.2 System Balancing 37
B.2.1 Hydronic Systems Testing, Adjusting and Balancing 37
B.2.2 Air Systems Testing, Adjusting and Balancing 38
B.2.3 Balancing Contractor & Controls Contractor Co-ordination 38
C Systems Operating Manuals (SOMs) 39
C.1 Application 39
C.2 SOM Structure 39
C.3 Chapter Structure – All Projects 40
C.4 SOM Content 40
1. Table Data 40
2. General Description 41
3. Owner's Project Requirements 41
4. Design Criteria 41
5. System Location 41
6. System Redundancy 41
7. Energy Source 41

8. Normal and Emergency Power Operation 41
9. Emergency Procedures 41
10. Operating Schedule 41
11. Drawing Reference 42
12. Operating and Maintenance Manuals Reference 42
13. Setpoint Parameters 42
14. Sequence of Operation 42
15. Operating Instructions 42
D Operation and Maintenance Manuals (O&Ms) and As-builts 43
D.1 Application 43
D.2 O&M Structure 43
D.3 Volume Structure – Large Projects 44
D.4 CMMS Data 45

1 Introduction

This Standard summarizes the Testing, Commissioning, Acceptance and Turnover (TCAT) process for mechanical, electrical (including related software systems), site services, and architectural systems; for new building construction, and renovations and/or modifications to existing buildings or systems at SickKids (Owner) Hospital.

The TCAT Standard is intended to follow the CSA Standard Z8001-13 Commissioning of Health Care Facilities. Consultants and Contractors are responsible for following this Standard and the commissioning requirements as set out in CSA Z8001-13. All requests for clarification of specific information in this Standard will be directed to the Director of Facilities Development and Facilities Infrastructure Renewal, or in his/her absence, the SickKids Project Manager. All SickKids projects, large or small, must go through the TCAT process before they are turned over to the hospital. Exemptions are minor projects, which will be reviewed by Facilities Development and Facilities Operation Manager or in his/her absence, the SickKids Project Manager and considered on an individual basis.

After the substantial performance of large scale projects and, prior to opening, the facility will be maintained through normal operating processes, either directly by SickKids or through a third party facilities manager. The predictive, preventative and corrective maintenance will be performed as though the facility was fully functional. Work orders will be issued though a Computerized Maintenance Management System (CMMS) and assigned accordingly. This process will help refine the frequency, task content and task times associated with each function, and provide valuable orientation and familiarization training for maintenance management and trades staff.

The TCAT process is an essential tool for the development of the operations staff. The commissioning team will ensure the training and involvement of SickKids operations staff will be sufficient for the hospital staff to operate and maintain the systems that are being handed over to the hospital. This includes answering questions from staff, resolving issues identified, providing the operation and maintenance manuals, as-builts and updating systems during the TCAT process.

The designated Facility Operation Manager and Project Manager will define the level of compliance required for each project. The hospital project representatives, consultants and contractors must be familiar with the TCAT process outlined in this document.

Refer to the contract documents for details on the equipment and systems testing and commissioning requirements, roles and responsibilities of each member of the commissioning team and the deliverables for the project. The flowchart below, identifies the TCAT process and deliverables for each stage of the TCAT process.

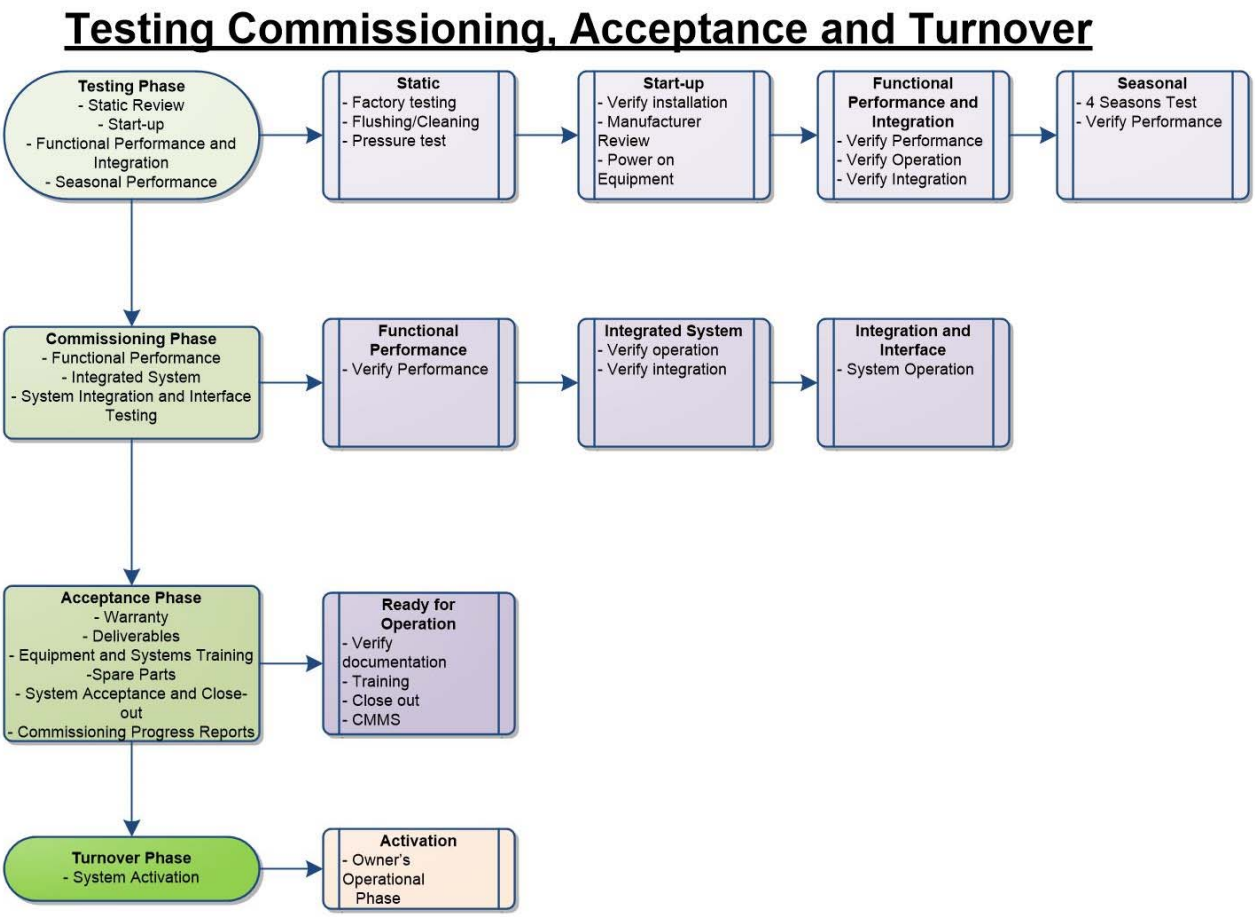

1.1 Objectives

The objectives of the TCAT process are to verify the following:

- The Owner's Project Requirements (OPR) (i.e. the purpose) for the facility has been documented and utilized in the development of the Basis of Design (BOD).
- The installation meets the requirements of the contract documents.
- The equipment and system performance meets the requirements of the contract documents, the Owner's Project Requirements OPR and the Basis of Design (BOD).
- The newly installed systems are integrated with the existing systems.
- The energy target objectives meet the requirements of the contract documents.
- The operational project turnover, as defined in the contract documents and the TCAT Standard, has been completed.
- Operation and maintenance data for the equipment and systems inclusive of the as-builts, operation and maintenance manuals are provided.
- Information as required for the CMMS is provided.

- The documentation delivered to SickKids meets the requirements of the contract documents and the operational requirements.
- The operation and maintenance training meets the requirements of the contract documents and the operational requirements.
- Correction of all deficiencies are completed and verified by the Consultants.
- Correction of any warranty issues are completed.
- Seasonal testing are completed.

1.2 Benefits

The TCAT process provides several benefits, including, but not limited to the following:

- Coordination of the design and construction teams to bring the building systems to completion successfully.
- Ensuring integration of the new and existing systems.
- Introduction and overview of the system for familiarization of operations and maintenance with Facilities Operation.
- Provide technical information to make Facilities Operation capable of operating, troubleshooting and maintaining the building systems.
- The additional control of the documentation flow will ensure that essential documentation is delivered to SickKids when it required.
- Reduction of the number of deficiencies and warranty repairs.
- Reducing the number of complaints and problems during the first year of operation and ongoing operation.
- Ensuring all relevant information is contained within the SickKids Computerized Maintenance Management System (CMMS) prior to initiation of maintenance activities which will ensure a complete maintenance history of the asset(s).

It is the responsibility of the consultants and contractors to ensure that these benefits are realized.

1.3 The Commissioning (TCAT) Team

The Commissioning (TCAT) team is assembled at the beginning of a project to maintain oversight of the TCAT process for a project from beginning to end. The TCAT team may consist of the following people, but not limited to:

- SickKids Facilities Operation Manager
- SickKids Project Manager
- Commissioning Authority
- Consultant (architect and/or engineer)
- General Contractors or Construction Manager.
- Sub-Contractors (Mechanical, Electrical, Controls, Fire Alarm, Security, IT, Balancer, etc.), as required.

The SickKids Project Manager will co-ordinate the responsibilities of the TCAT team, who will, in turn, provide the following services:

1. Assist the hospital to develop and/or finalize the Owner’s Project Requirements (OPR).

2. Assist the Commissioning Authority to coordinate the project commissioning requirements with the contract documents.
3. Prepare the contract documents detailing the project requirements.
4. Provide input on the preparation of the commissioning plan by the Commissioning Authority based on the OPR, BOD and the design documents requirements.
5. Verify that the mechanical, electrical, site services and architectural systems and their installation meet the contract document requirements.
6. Verify that the contractors have completed all pre-functional, start up, functional performance and systems integration tests.
7. Provide the test requirements in the contract documents on the mechanical, electrical, site services and architectural systems to verify that they achieve the basis of design performance.
8. Participate in the final performance and systems integration testing of the mechanical, electrical, site services and architectural systems, to be conducted by the contractors.
9. Verify that the contractors have provided the training specified in the contract documents.
10. Verify that the as-builts documentation meets the requirements of the contract documents.
11. Verify that operation and maintenance data for the equipment and systems are provided.
12. The Facilities Operation team shall be involved in the project during the planning and construction phases to provide input on the operational needs of the facility and coordination of shutdown of services to accommodate the construction.
13. Co-ordinate with the Owner, Commissioning Authority, Consultants, the construction manager or the general contractor and the contractors.
14. Verify that seasonal testing is completed and all warranty and deficiencies items are corrected.
15. Provide an overall assessment report associated with acceptability of installation and performance of equipment.

1.3.1 The Owner (SickKids)

1. The Owner (SickKids) will provide the following, but not limited to:
   - Provide the Owner's Project Requirements (OPR) to the design team and Commissioning Authority.
   - Review and provide input on the Basis of Design (BOD) and design documents.
   - Review and provide input on the product selection at the design and construction phases.
   - Review and comment on the equipment and system installation with regards to accessibility for operation and maintenance.
   - Review and provide input on the final Commissioning Plan.
   - Attend commissioning meetings.
   - Provide staff for training on the operation and maintenance of the systems.
   - Arrange for any third-party certification that may require for certification of Owner supplied equipment.

1.3.2 The Commissioning Authority

1. The Commissioning Authority will provide the following services:

- Lead the Testing, Commissioning, Acceptance and Turnover (TCAT) team in the commissioning of the project.
- Setup and chair commissioning meetings, attend construction meetings.
- Assist the hospital to develop the Owner's Project Requirements (OPR).
- Review the Basis of Design (BOD) prepared by the consultant and provide feedback.
- Assist the consultants to coordinate the project commissioning requirements with the contract documents.
- Prepare the commissioning specifications detailing the project commissioning requirements.
- Prepare the commissioning plan based on the OPR, BOD and the design documents requirements. Commissioning plan shall include as a minimum the following:
    - Commissioning objectives and a description of the commissioning process.
    - TCAT team roles and responsibilities.
    - Overview of the commissioning activities, scope and systems to be commissioned.
    - Training plan.
    - Documentation and reports.
    - High level commissioning schedule of activities.
- Perform reviews on the design documents using the OPR and BOD and provide feedback to the consultants.
- Develop construction checklists. Prepare the construction checklist for the equipment and systems with input and documents provided by the design consultants and contractors.
- Maintain an issues and benefits log throughout the commissioning process. Develop and implement an issues tracking log to identify a summary of the commissioning deficiencies and corrective measures taken to rectify the commissioning deficiencies.
- Review contractors' submittals, shop drawings, test reports and provide feedback to the TCAT team.
- Perform site review of the mechanical and electrical systems installation as related to the commissioning.
    - Review the installation for accessibility for maintenance.
    - Witness start-up of major equipment.
    - Review the balancing report and verify the balancing (10%) with the balancer on site.
- Assist the consultants to verify that the contractors have completed all pre-functional, start up, functional performance verification and system integration tests.
- Review and provide input on the construction and commissioning schedule.
- Review third party test reports and provide feedback to the TCAT team.
- Review the pre-functional test forms prepared by the contractors for the equipment and systems.
- Prepare the functional test forms and procedures for the equipment and systems.
- Provide independent functional performance verification and systems integration tests on the mechanical and electrical systems to verify that they achieve the basis of design performance.

    - Perform functional testing of the BAS (100% of the points) controls sequence of operation under normal, emergency, occupied and unoccupied modes of operation. Testing shall include temperature, humidity and pressure.
- Participate in the final performance verification and systems integration testing of the mechanical and electrical systems, to be conducted by the contractors.
- Verify inclusion of Facilities Operation and Users training requirements in the construction documents. Review that the design consultant has included the training requirements in the contract document.
- Coordinate, attend and verify that the contractors have provided the training specified in the contract documents.
- Prepare and issue commissioning reports.
- Prepare the System Operation Manual (SOM).
- The Commissioning Authority will co-ordinate with the consultant and contractor, including:
    - Verify that the as-built documentation meets the requirements of the contract documents.
    - Verify that operation and maintenance data for the equipment and systems are provided.
    - Verify that CMMS data for the equipment and system are provided.
    - Verify that seasonal testing is completed
    - Verify all commissioning deficiencies are corrected.
- Provide an overall assessment report associated with acceptability of installation and performance of equipment.
- Review building operations 10 months after substantial completion. Review performance of the building with Facilities Operation.
- Develop an ongoing commissioning plan for the equipment and systems (if applicable).
- Where the project is to be certified by Canada Green Building Council (CaGBC), the Commissioning Authority shall provide commissioning services to meet the requirements of the following:
    - EA Prerequisite: Fundamental Commissioning and Verification
    - EA Credit: Enhanced Commissioning
    - Complete and sign all commissioning documents required by CaGBC.

1.3.3 The Design Consultant (DC)

This section describes the roles and responsibilities of the Design Consultant.

- Assist the Owner to develop the Owner's Project Requirements (OPR)
- Prepare the Basis of Design (BOD)
- Assist the Commissioning Authority to coordinate the project commissioning requirements with the contract documents.
- Prepare the contract documents detailing the project requirements.
- Provide input on the preparation of the commissioning plan by the Commissioning Authority based on the OPR, BOD and the design documents requirements.
- Provide input on the commissioning and construction schedule.
- Attend commissioning meetings.

- Review commissioning progress and deficiency reports, including the commissioning tracking log.
- Review and provide input on the pre-functional test form prepared by the contractors.
- Review and provide input on the functional test procedures prepared by the Commissioning Authority.
- Verify that the mechanical, electrical, site services and architectural systems and their installation meet the contract document requirements.
- Review with the contractor that abandoned services impacted by the project are terminated and capped as per the contract documents.
- Prepare and issue site report.
- Witness start-up and testing (including integration testing) of equipment and systems.
- Verify that the contractors have completed all pre-functional, start up, functional performance and systems integration tests.
- Provide the test requirements in the contract documents on the mechanical, electrical, site services and architectural systems to verify that they achieve the basis of design performance.
- Participate in the final performance and systems integration testing of the mechanical and electrical to be conducted by the contractors.
- Verify that the contractors have provided the training specified in the contract documents.
- Provide the training to Facilities Operation on the Design Intent.
- Verify that the as-built documentation meets the requirements of the contract documents.
- Verify that operation and maintenance data for the equipment and systems are provided.
- Verify that CMMS data for the equipment and system are provided.
- Co-ordinate with the Commissioning Authority, the construction manager or the general contractor and the contractors.
- Verify that seasonal testing is completed and all warranty and deficiencies items are corrected.
- Provide an overall assessment report associated with acceptability of installation and performance of equipment. Provide sign off to the Owner and recommend acceptance.
- Provide input on the preparation of the System Operation Manual.

1.3.4 The Contractor

This section describes the roles and responsibilities of the Contractor (General, Mechanical, Electrical, Controls, TAB and other Sub-Contractors)

- Obtain a copy of the TCAT Standard and become familiar with all the requirements and deliverables.
- Co-ordinate and cooperate with the Owner, Project Manager (PM), Design Consultants (DC) and Commissioning Authority (CA).
- Attend commissioning meetings.
- Develop and update the construction and commissioning schedule. The Contractor shall prepare and issue the draft commissioning schedule three (3) weeks after issuing the draft construction schedule. Provide copies to the Owner, Design Consultants and Commissioning Authority for review and input. The Contractor shall prepare and issue the revised commissioning schedule three (3) weeks after receiving feedback from the Owner, Design Consultants and Commissioning Authority. Integrate all commissioning activities into the commissioning schedule and overall construction schedule.
- Provide labor and material to perform start-up, pre-functional, functional, integrated system tests for all equipment and systems.

- Ensure all abandoned services impacted by the project are terminated and capped. Remove all abandoned services as required by the contract documents.
- Provide qualified technicians to operate all equipment and systems during functional performance tests, integrated systems tests, commissioning reviews and training sessions
- Prepare the equipment and system pre-functional test and start-up test forms. Provide for review and input by the design consultant and commissioning authority.
- Complete the equipment and system pre-functional test, start-up test and pre-functional datasheets. Provide for review and input by the design consultant and commissioning authority.
- Document all verification and functional performance tests by completing all checklists for approval by the DC and CA.
- Complete functional test and integrated system tests using procedures and documents provided by the CA for equipment and systems installed on the project.
- Issue a statement and certify that testing and balancing work has been completed; and submit the final testing and balancing reports for review prior to the DC and CA review of the TAB work.
- Issue a statement and certify that the BAS system controls and security/access system controls have been calibrated, checked-out, and that the control of equipment and systems are fully operational and functionally tested in all sequences and operating modes prior to the DC and CA review of the systems.
- Issue a certificate of readiness that functional test and integrated system test performed by trade contractors have been completed and tested including all BAS control requirements and other control or monitoring systems have been reviewed and observed and are fully operational, functionally tested and ready for demonstration to the DC and CA. The DC, CA, PM and Owner shall be the vehicle to determine systems are ready. Additional commissioning costs shall be chargeable to the Contractor if equipment and systems are not ready as claimed for scheduled commissioning reviews (reference commissioning specifications for further details).
- Provide written notification to the PM, DC and CA that testing and commissioning activities and documentation have been completed in accordance with the contract documents, and that the equipment, systems and sub-systems are operating as required.
- Responsible for the correction of all deficiencies noted during the commissioning and scheduling of all retesting of equipment and systems. Cooperate with CA for resolution of issues recorded on the commissioning deficiency log.
- Evaluate any performance deficiencies identified in the Functional Performance Testing report for non-performance with contract documents.
- Verify that the mechanical, electrical, site services and architectural systems and their installation meet the contract document requirements.
- Verify and document the completion of all pre-functional, start up, functional performance and systems integration tests on the appropriate forms.
- Participate in the final performance and systems integration testing of the mechanical, electrical, site services and architectural systems, to be conducted by the contractors and oversee by the CA.
- Prepare and issue the training agenda. Provide all required training documents at the training session.
- Provide the training of the Owner’s Facilities Operation staff as specified in the contract documents.

- Provide training to the Hospital End User Group on equipment and devices as required by the End Users.
- Prepare the as-built documentation to meet the requirements of the contract documents.
- Prior to closing of walls and ceilings, the contractor shall review the red-line as-built drawings with the consultants, commissioning authority and Facilities Operation.
- Prepare the operation and maintenance manuals for the equipment and systems.
- Provide the CMMS data for the equipment and systems.
- Perform the seasonal testing and ensure all warranty and deficiencies items are corrected.
- Provide information as required by the CA in the preparation of the System Operation Manuals.

1.4 Definitions

Words and terms used in this manual, not included in the list of definitions, will have the meaning that is commonly assigned to them in the context in which they are used. This excludes specialized use of terms by the various trades and professions to which the terminology applies, in which case common industry use shall prevail.

1.4.1 Primary Definitions

The following words or terms in this manual have the following meaning. See the diagram below for a summary of how they inter-relate.

A. Testing: This stage includes testing components and individual systems against a set of design criteria.

B. Commissioning: This stage includes the systematic verification, documentation, and training, as applied to all activities during the design, construction, pre-functional verification, start-up, functional performance testing and integration testing of equipment and systems in a facility to ensure that the facility operates in conformity with the owner's project requirements and the basis of design in accordance with the contract documents.

C. Acceptance: The purpose of this stage is for the Project Manager to verify the deliverables from the vendor based on the project requirements. This process is mostly related to substantial performance.

D. Turnover: The purpose of this stage is for the project team to hand the deliverables over the Facilities Operation and for the facility to be operationalized. This includes validating the facility/system is fit for its intended purpose and all deliverables such as drawings, manuals, spare parts and training have been made available to stakeholders. Though preparation for activation occurs in all steps of the TCAT process the active part of it is during Turnover.

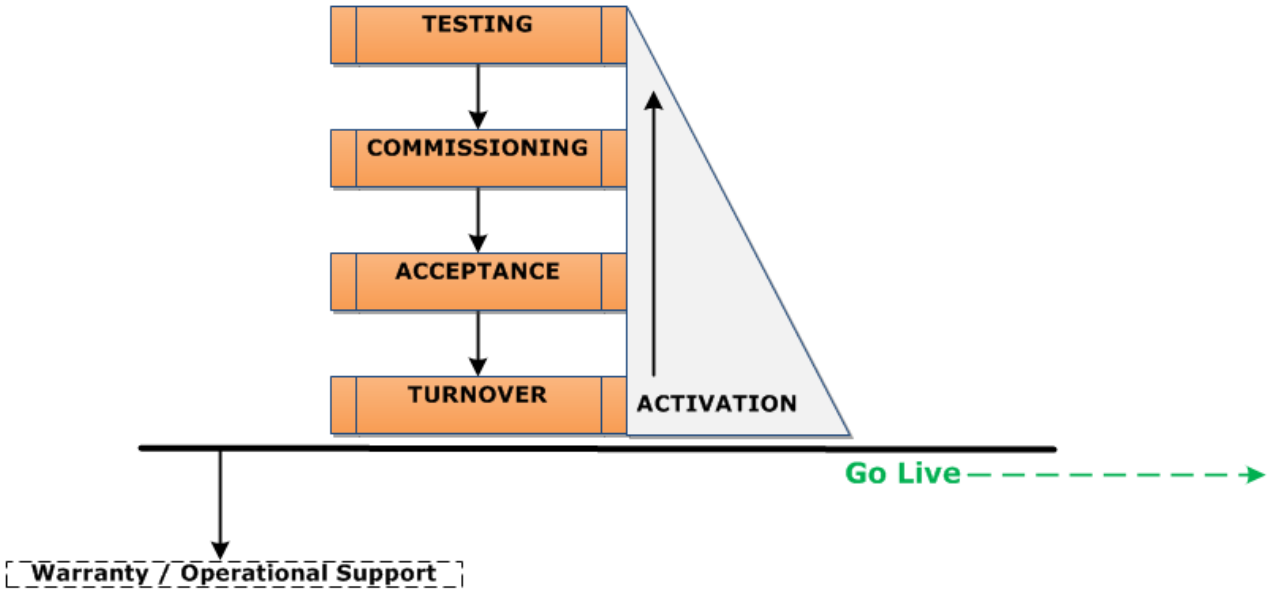

1.4.2 Additional Definitions

Activation – Activation is defined as the transition process from the construction of the new facility to full operation. While the proper operation of the physical asset is assured by the successful implementation of the design, construction and commissioning of the facility for its intended use, it is vitally important that all stakeholders involved in the project are properly oriented and trained to operate the new asset seamlessly and continuously. Activation addresses this facet of the development.

Basis of Design (BOD): This is a document, prepared by the consultants, that records the rationale, concepts, calculations, decisions, design intent, schemes and systems complete with narrative describing the design approach to achieving the Owner Project Requirements and to satisfy applicable regulatory requirements, Standards and guidelines.

Building Automation System (BAS): The BAS is a computerized system, which controls and monitors the various building systems. Several workstations are connected to SickKids (hospital wide) LAN. These workstations allow operators access to the BAS database. Note that the BAS is a term that is used to refer to any combination of Building Automation System, Building Management System, or Facility Monitoring System, jointly referred to as the BAS.

Close out Procedures: The close out procedures will be defined in the contract document. They will define the contractor's requirements to achieve substantial performance, total performance, and the contractor's requirements during the warranty period.

Commissioning Authority: An individual or company identified by an owner to lead the TCAT team in the implementation of the commissioning process (for more information, see section1.3.2 The Commissioning Authority).

Commissioning Specifications: This is a document, prepared by the Commissioning Authority, which describes the project commissioning requirements and details the roles and responsibilities of the TCAT team members in the execution of the commissioning process.

Commissioning (TCAT) Team: The commissioning (TCAT) team shall be responsible for ensuring that all building systems work with one another to produce an integrated facility that functions as per the contract documents. For more information refer to section 1.3.

Commissioning Plan: This is a document which describes the commissioning process to be created and implemented by the commissioning team. A project commissioning plan shall be prepared and shall include:

- Objectives
- Team roles and responsibilities
- Commissioning process
- Schedule
- Pre-functional verification
- Start-up
- Functional performance testing (including post-occupancy, seasonal, and deferred testing)
- Training
- Documentation
- Final acceptance.

CMMS: Computerized Maintenance Management System.

Construction Management: a specialized project management services that is implemented during the planning and design phases to oversee the construction and delivery of the project to the Owner.

Construction Stage: the construction process from contract award to substantial performance and total performance.

Consultant: the person/company that is responsible for the design of the work being done, including the preparation of the contract documents. The consultant shall participate in the TCAT process as required to ensure that the Owner's Project Requirements are met.

Contractor: the person/company that is responsible for implementing the contract documents, including the appropriate stages of the TCAT process.

Design Stage: The process of the design of the building and its systems, from identifying the OPR for the building to preparing the design to meet these requirements and preparing the contract documents for construction.

EAM: Enterprise Asset Management (ARCHIBUS System)

Functional Performance Testing: The objective of Functional Performance Testing is to ensure all mechanical/electrical assemblies and components perform in accordance with the design intent. Tests should be selected during the design stage and be appropriate to the operational requirements. Functional Performance Testing shall include, as a minimum, the following: a full range of tests under actual load, conducted to verify that specific systems, subsystems, components, and interfaces between systems conform to a given criteria. These tests are typically used to verify that a sequence of operation is correctly implemented and that the design intent has been met. They are typically performed after equipment is placed in full operation.

Includes: Any use of the terms includes, including, include, etc. shall be interpreted to have the meaning "includes, but not limited to".

Independent Performance Testing and Operational Testing: The hospital may determine a need to conduct these tests independent of the project team using either SickKids staff or a 3rd party commissioning consultant resource to verify that the installation and the systems comply with SickKids Project Requirements and that the design meets current operational requirements.

Integration/Interface Tests: The process of ensuring that the systems and sub-systems components through their respective interfaces are linked together and to any supervisory system in such a way as to achieve a facility/system that functions and operates as per the intended design.

Integrated System Testing: When functional testing of individual systems has been completed, Integrated System Testing will commence. This includes data transfer verification from system to system to confirm proper reaction and functionality. It also includes testing of multiple integrated systems performance to verify proper functional interface between systems. Typical Integrated Systems Testing includes all regular, failure mode and contingency operations, verifying that systems respond properly to partial system loss, loss of utility, transfer to emergency power sources, re-transfer from emergency power source to normal utility source; interface between HVAC controls and fire alarm systems for equipment shutdown, interface between fire alarm system and elevator control systems, interface between fire alarm system and security access to control access to spaces during fire alarm conditions and other similar tests as determined for each specific project, etc.

Operating and Maintenance Manuals (O&M): This is a document provided by the contractor that provides the operation and maintenance requirements and associated data for safe and efficient operation of specific pieces of equipment and systems.

Owner's Project Requirements: This is a document, provided to the consultants, which describes the hospital's project requirements for the building and desired methods to meet those requirements. These will range from architectural, structural, mechanical, electrical and operational requirements. A dynamic document that provides the explanation of the ideas, concepts, and criteria that are considered to be very important to the owner. The OPR should cite specific measurable goals for the owner's objective to the greatest extent possible.

Post Construction Stage: the contractor's responsibility for the warranty period, starting from the date identified in the contract documents to the end of the warranty period.

Seasonal Performance Testing: The deferred testing that the contractor will conduct over the four seasons after substantial performance to verify that the installation and the systems meet the consultant's basis of design under varying load conditions.

Start-up: Progressive start-up of equipment and systems, beginning at the power source and moving outward systematically. The purpose of the tests are to ensure that all equipment and systems are ready for operation and functional performance testing. Prior to start-up the following shall be completed, witnessed and documented:

- Safety tests
- Inspection and acceptance by authorized safety authority
- Emergency power tests
- Fire Alarm operation tests.

Pre-functional Testing: All tests required to be completed to ensure that the equipment is ready and safe to be energized, prior to start-up.

Subject Matter Expert (SME): is an individual who is an expert in a particular subject field, building system or process.

Substantial Performance: The criteria for achieving substantial performance shall be defined in the contract documents for the project.

Systems Operation Manual: This manual is prepared by the Commissioning Authority with input from the consultants and Contactor and describes, in lay terms, the operating intent of each system, including design performance and operational data. It is to include diagrams for that illustrate the sequence of operation for each system and interaction between individual systems. The operation manual details modes of operation and includes associated diagrams that illustrate the sequence of operation for each system and interaction between individual systems. This is verified by the commissioning team during the TCAT process.

Testing Commissioning Acceptance Turnover (TCAT): Testing, Commissioning, Acceptance and Turnover (TCAT) of a facility system or component. The process utilized by the SickKids to ensure the equipment and systems are ready for activation and use for the purpose intended [**see Definitions A – D**].

Total Performance: The criteria for achieving total performance shall be defined in the contract documents for the project.

1.4.3 Acronym Used in the TCAT Standard

AABC – Associated Air Balancing Council

AHJ – Authority having Jurisdiction

BOD – Basis of Design

BAS – Building Automation System

CA – Commissioning Authority

CAD - Autocad

CaGBC – Canada Green Building Council

CSA – Canadian Standards Association

CMMS – Computerized Maintenance Management System

DC – Design Consultant

HVAC – Heating Ventilation and Air-Conditioning

NEBB – National Environmental Balancing Bureau

O&M – Operation and Maintenance

OPR – Owners Project Requirements

PM – Project Manager

SOM – System Operation Manual

TAB – Testing and Balancing

TCAT – Testing, Commissioning, Acceptance and Turnover

T&C – Testing and Commissioning

2 Testing, Commissioning, Acceptance and Turnover (TCAT)

This section provides a general summary of the Testing, Commissioning, Acceptance and Turnover (TCAT) process. The TCAT process describes the responsibilities of the design, construction and Owner's teams during all stages of a project. The TCAT process ensures the OPR, BOD and contract requirements are achieved and the facility can be used for its intended purpose. The consultants and contractors will facilitate and support the hospital and/or commissioning authority to participate or observe in all stages of the TCAT process.

2.1 General Requirements

The following are common requirements for all stages of the TCAT process:

1. The current status and results of the TCAT process will be documented at the construction meetings by the commissioning team and the contractor will update the TCAT activities in the construction and commissioning schedule in advance of each meeting.
2. Completion of the associated TCAT forms by the commissioning team. The completed forms will be forwarded to the consultants and commissioning authority for review against requirements in general and the Basis of Design specifically.
3. The commissioning team will provide a report, identifying compliance or non-compliance to the basis of design and contract documents at the end of each state and sub-stage.
4. The consultant will issue a compliance or non-compliance letter to the SickKids project manager, detailing any issues that may remain at the Testing, Commissioning and Acceptance phases.
5. The commissioning authority will issue a report to the SickKids project manager, detailing any issues that may remain at the Testing, Commissioning and Acceptance phases.
6. The BAS will be programmed with historic trend logs for a minimum of 3 months. The Commissioning Authority will review these logs to evaluate the performance of the mechanical system.

2.2 Systems

1. The TCAT forms and tests will include the following equipment and systems, but not limited to:
    a. Boilers.
    b. Steam.
    c. Chillers.
    d. Cooling Towers.
    e. Air Handling Units.
    f. Variable Speed Drives.
    g. Building Automation System.
    h. Fans.
    i. Pumps.

j. Heat Exchangers.
k. Hydronic Heating (radiation).
l. Fan Coil Units.
m. Computer Room (CRAC) Units.
n. Plumbing Systems.
o. Normal Power.
p. Emergency power.
q. Nurse Call.
r. Patient Wandering.
s. RTLS (Real Time Location System).
t. Lighting and Lighting Control System.
u. Fire Alarm System.
v. Smoke Venting and Smoke Control.
w. Fire Protection System (Standpipe, Sprinkler).
x. Communication system.
y. IT Systems.
z. Security System.
aa. Diesel Fuel System.
bb. Lightning Protection System.
cc. Power Management and Control System.
dd. Horizontal Transportation System.

2.3 Testing

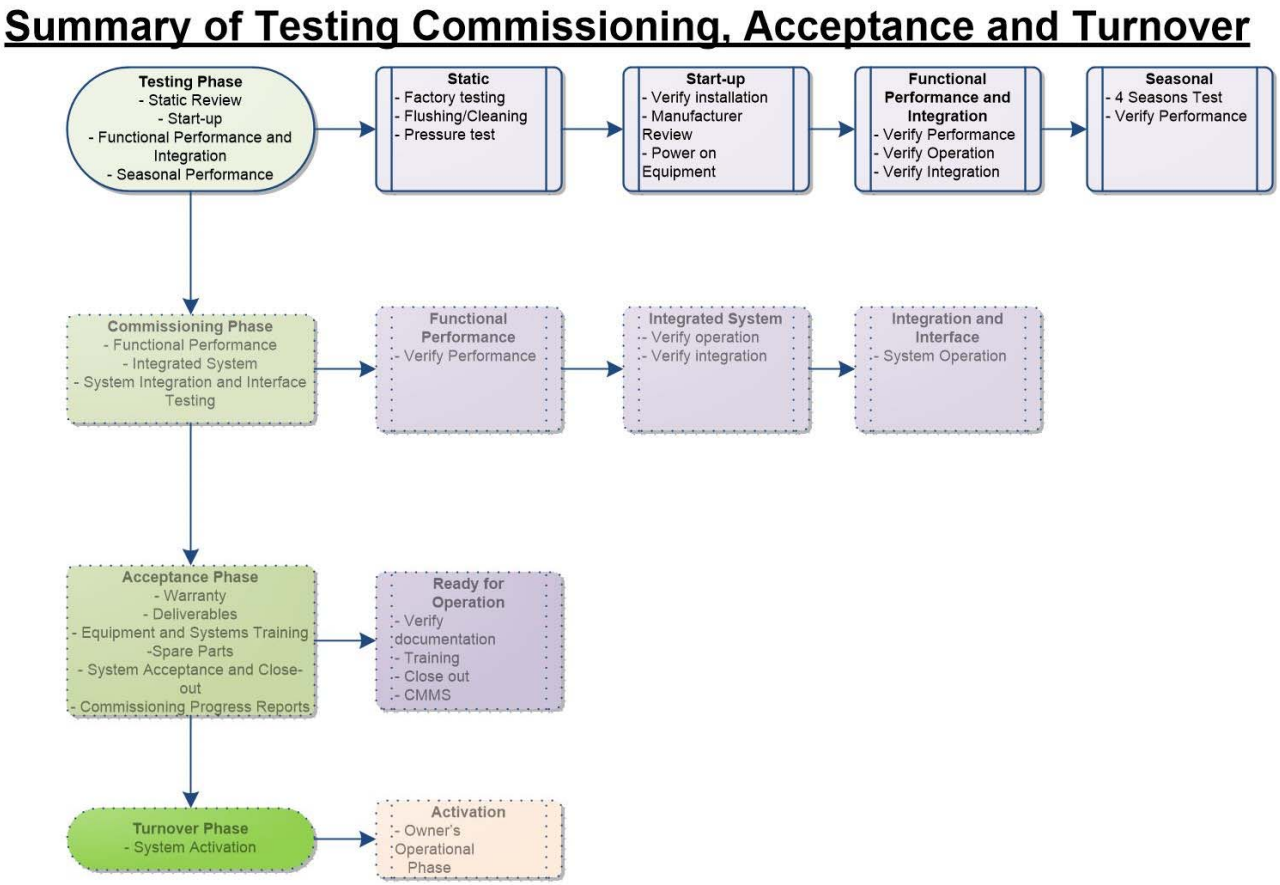

Testing incorporates the various methods the contractor will use to verify that components of a specific system are correctly installed and functioning, and that they work in concert with each other to form the specific system (e.g. all electrical, mechanical and fire alarm components within a system).

The Testing Phases includes the following:

a. Pre-functional Testing.

b. Start-up Testing.

c. Functional Performance and Integration Testing.

d. Seasonal Performance Testing (if applicable).

For all stages of testing, the contractor shall prepare a construction and commissioning schedule, which includes all testing specified or required by the contract documents. The contractor shall provide confirmation of the tests dates, with a minimum of 72 hours' notice.

2.3.1 Pre-functional Testing

Responsibilities are as follows:

SickKids Facilities Operation – Partial Attendance

SickKids Project Manager – Optional Attendance

Commissioning Authority –Partial Attendance

Consultant –Partial Attendance

Contractor - Responsible

The contractors will prepare the pre-functional test forms, conduct the pre-functional tests and complete the associated test forms. The completed forms and tests results will be forwarded to the Consultant and Commissioning Authority for review.

The requirements for the pre-functional testing will be identified in the specifications. They will include but, not limited to the following:

a. Factory acceptance tests.
b. General Site Services.
c. Electrical Cable testing.
d. Switchboard testing.
e. Cable and equipment conductivity tests.
f. Communications Cable testing.
g. Mechanical Drainage testing.
h. Plumbing testing.
i. Piping pressure testing.
j. Duct pressure testing.
k. Flushing/cleaning piping systems, chemical water treatment, domestic water sanitization and water sample testing, inspection by authorities having jurisdiction.
l. Verification of documentation.

2.3.2 Start-up Testing

Responsibilities include:

SickKids Facilities Operation – Partial Attendance

SickKids Project Manager – Optional Attendance

Commissioning Authority –Partial Attendance

Consultant –Partial Attendance

Contractor – Responsible.

Start-up Testing consists of the following:

1. The Start-up tests will be performed when there is permanent power in the building, or a temporary power source (special circumstances) that is acceptable to the Owner.
2. The contractors will progressively energize the equipment and systems, beginning at the power source and moving outward systematically. Tests include: power phasing, switchgear, protective devices, calibrations, alignments and motor rotations.
3. A systematic start-up of each component of the system by the contractor and equipment manufacturer until the entire system is operating. Each component is checked and all deficiencies rectified prior to starting the next component.
4. The contractors and equipment manufacturer will verify the installation of the equipment meets the manufacturer and specification requirements and conducts the start-up process.
5. The contractors will conduct the start-up tests and complete the associated test forms. The completed forms and tests results will be forwarded to the consultant and Commissioning Authority for review.
6. Observe initial systems operation and visual inspections after operation.
7. Temperature measurements for hydronic and air systems.
8. Voltage measurements.
9. Operation of safety controls and interlocks.

2.3.3 Functional Performance and Integration Testing

Responsibilities include:

SickKids Facilities Operation – Partial Attendance

SickKids Project Manager – Optional Attendance

Commissioning Authority – Partial Attendance

Consultant – Partial Attendance

Contractor – Responsible.

Functional Performance and Integration testing includes:

1. The purpose of Functional Performance Testing is to verify that the basis of design for the building systems have been achieved in all areas of the building, including as much as possible due to the time of the year of the testing, the operation during different seasonal modes.
2. The systems functional performance and integration testing will be conducted when the pre-functional testing and start-up is completed. These tests will be designed to verify the basis of design of the mechanical and electrical systems have been met at all levels of the system.
3. The integrated system tests will be conducted when all mechanical and electrical equipment is operating and when all relevant system testing has been completed.
4. The systems are started and tests are performed through a full range of operating conditions through simulations and monitoring of equipment functions. Corrective actions are recorded and applied.

5. “End to End” tests which tests all functionality from the device level up to, and including the Building Automation systems (BAS). These are performed or repeated at this level, as necessary, to ensure that all functionality is working between the device and the BAS.
6. All failure modes and contingency modes that are applicable to the functional performance testing, including testing of all alarms.
7. The contractors will issue a document to the consultant and commissioning authority that the systems are ready for commissioning.
8. The Commissioning Authority will review the results of the testing with the consultants. The consultants will confirm whether all the results meet the basis of design performance and issue a report to SickKids Project Manager.
9. The tests that the mechanical contractor will have completed include but not limited to the following:
    - Pressure testing of all piping and ductwork
    - Start-up of all equipment and systems
    - Point to point verification of all controls points and verification of the control sequences
    - Balancing of the air and hydronic.
10. The Air and Hydronic Balancing Contractor will co-ordinate with the BAS Contractor to verify operation of equipment and instrumentation calibration.
11. The consultant and the Commissioning Authority will witness the final performance demonstration of these systems.
12. The electrical contractor and the electrical testing contractor will have completed the following tests at this stage:
    - Cable testing
    - Switchboard and transformer testing
    - Ground fault protection testing
    - Co-ordination study
    - Voltage measurements.
13. Thermographic testing of the electrical distribution system of 416 Volts and above.
14. Load measurements at all electrical distribution panels and review the results with the consultants.
15. Harmonics readings and review the results with the consultants and Commissioning Authority.
16. The electrical contractor will have completed testing on the diesel generator, automatic transfer switching and the UPS. The mechanical contractor will have completed testing on the fuel oil delivery system.
17. The electrical contractor will conduct an eight-hour test on the emergency generator to verify the system’s ability to provide the basis of design performance.
18. The electrical contractor will have completed the testing on the lighting system.
19. The consultant and the Commissioning Authority will witness a final performance test of the operation of the computerized lighting control system and lighting level measurements for each zone of the facility.

20. The electrical contractor, mechanical contractor and the fire alarm contractor will complete all the required testing and conduct their final verifications. The Fire Department and the code consultant will then attend and witness the testing and demonstration of the fire alarm system and its sub-systems. The sub-systems will include, but not limited to the following:
    - Voice communication system
    - Electro-magnetic locking devices
    - Elevators
    - Emergency lighting system
    - Sprinkler systems
    - Fire pumps
    - Fire hydrants
    - Fire suppression systems for exhaust hoods
    - Standpipe systems.
21. The consultant and the Commissioning Authority will witness the final performance demonstration of the fire alarm system and its interface with the mechanical systems.
22. The electrical contractor and the security system contractor will have completed testing and verification of the security system.
23. The consultant and the Commissioning Authority will witness the final performance demonstration of the security system and its interface with other systems.
24. The electrical contractor and the associated systems manufacturer will have completed testing and verification of the systems.
25. The consultant and the Commissioning Authority will witness the final performance demonstration of these systems.
26. The contractor and manufacturer will have completed the specified tests and code tests appropriate for any elevator. The consultant, authority having jurisdiction and the Commissioning Authority will witness the final performance demonstration of these systems.
27. The contractor and manufacturer will have completed appropriate tests for any dock leveler. The consultants and the Commissioning Authority will witness the final performance demonstration for any dock leveler.
28. The contractor and manufacturer will have completed the specified tests for door hardware. When the door hardware is utilized by the security and/or the final alarm system the contractor will have tested the door hardware with these systems.
29. The consultants will witness the final performance demonstration of door hardware not associated with the security and/or the fire alarm system.
30. Other items architectural covered by the architectural section of the specifications to also be tested as required.

2.3.4 Seasonal Performance Testing

Responsibilities include:

SickKids Facilities Operation – Attendance

SickKids Project Manager – Optional Attendance

Commissioning Authority – Attendance

Consultant –Attendance

Contractor – Responsible.

Seasonal Performance testing includes:

1. The contractors, consultants and Commissioning Authority will conduct seasonal performance tests so as to allow testing for all 4 full seasons. The intention is to validate operations with full operational loads during extreme conditions as well as shoulder seasons where systems are in transition.
2. The seasonal performance tests will be a continuation of the performance tests conducted prior to substantial completion.
3. The tests will be designed to verify the operation of the mechanical system throughout the four seasons with a building load.
4. The test results will be documented and compared to the basis of design and contract documents requirements.
5. The electrical system does not require systems seasonal performance testing. A power system load balance and harmonics test may be necessary if the building occupancy increases during the first year of operation.
6. The consultants and commissioning authority will witness the emergency power start-up tests, once during the warranty period and verify the results with the performance requirements.
7. The consultants will review the results of the seasonal performance testing to verify that the basis of design has been achieved. The consultants will issue a letter of acceptance.
8. The commissioning authority will issue a report on the testing.

2.4 Commissioning

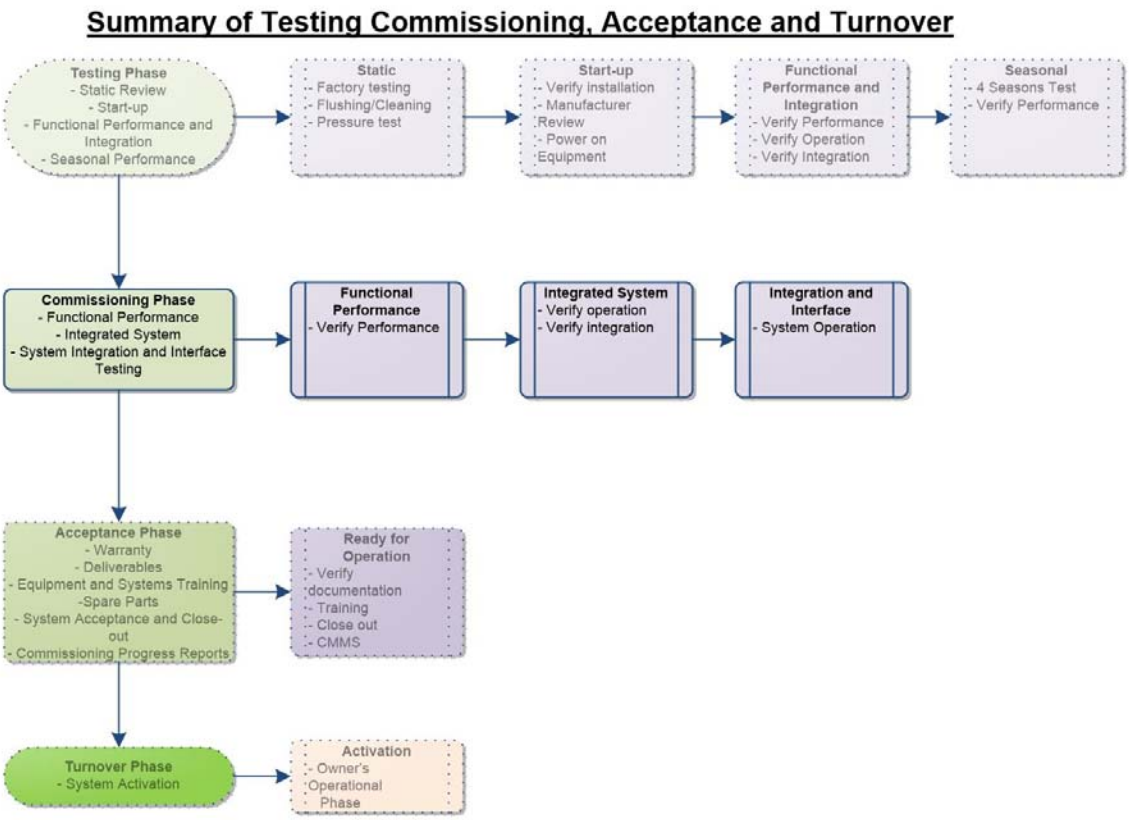

2.4.1 Functional Performance Commissioning

Responsibilities include:

SickKids Facilities Operation – Attendance

SickKids Project Manager – Optional Attendance

Commissioning Authority – Attendance

Consultant – Attendance

Contractor - Responsible

Functional Performance Commissioning testing includes:

1. When the commissioning (TCAT) team has received notice that the contractors have completed testing, the facility is clean and ready for continuous operation, they will begin the commissioning process. The hospital will assign, where possible, operational staff to participate in the commissioning process. The BAS will also be used to verify that the basis of design performance is provided at all stages of the mechanical system and in every room of the building. The tests will be based on loads that are available at the time of testing.

2. The functional performance test will commence starting at the equipment and then to the systems.
3. Final performance testing of the mechanical systems. These will include chillers, boilers, air handlers, BAS, pumps, air and water distribution, supplemental cooling, pneumatic tube, fire protection and plumbing systems.
4. Final performance testing of the electrical systems. These will include switchboards, electrical distribution, ground fault protection, emergency generators, automatic transfer switches, voltage and harmonics measurements, the lighting system, the fire alarm system and the security system.
5. Final performance testing of the architectural systems. Door and door hardware, elevators and Owner supplied equipment installed by the contractor.
6. Final performance testing of the hospital systems. This will include nurse call, patient wandering, RTLS and hospital supplied equipment installed by the contractor.
7. The commissioning team will provide a report, identifying compliance or non-compliance to the basis of design.
8. The commissioning team will verify whether the operational requirements have been provided.
9. The commissioning team will verify the air and Hydronic Balancing.
10. The commissioning team will verify BAS operation including, but not limited to space temperatures, humidity and pressurization.
11. The commissioning team will witness the final performance testing of the various mechanical and electrical systems.

2.4.2 Integrated System Commissioning

Responsibilities include:

SickKids Facilities Operation – Attendance

SickKids Project Manager – Optional Attendance

Commissioning Authority – Attendance

Consultant – Attendance

Contractor – Responsible.

Integrated System Commissioning includes:

1. When every individual system has been commissioned and verified, the systems integration commissioning will begin. The primary purpose is to ensure that all systems integrate with all other systems such that overall system provides the desired functionality.
2. These tests will be set up to demonstrate that all systems operate in concert. For example, when the fire alarm system is activated all associated systems that receive this data will be activated and verified.
3. These tests will verify that data from and to the individual systems has been successfully transferred from and to the BAS.
4. The information displayed at the BAS will be verified.

5. The integrated system commissioning will include but not limited to the following:
    - HVAC Systems
    - BAS
    - Normal and Emergency Power
    - Fire Alarm System
    - Fire Protection
    - Smoke Control and Smoke Venting
    - Lighting Control System
    - Lighting Protection System
    - Power Management and Control System
    - Elevators
    - Nurse Call
    - Patient Wandering
    - Pneumatic tube
    - RTLS
    - Security System
    - IT System
    - Hospital System
    - Architectural Systems.

2.4.3 Pre-Acceptance Commissioning (Owner)

Responsibilities include:

SickKids Facilities Operation –Attendance

SickKids Project Manager – Optional Attendance

Commissioning Authority –Attendance

Consultant –Attendance

Contractor – Responsible.

Pre-Acceptance testing includes, but not limited to:

1. Life safety commissioning to ensure that they are ready for the AHJ (Buildings Department, Fire Department).
2. Security commissioning to ensure that systems are ready for operational requirements.
3. Elevating device (Elevators,) commissioning.
4. BAS.
5. Emergency and UPS power systems.

2.4.4 Seasonal Performance Commissioning

Refer to section 2.3.4 Seasonal Performance Testing

2.5 Acceptance

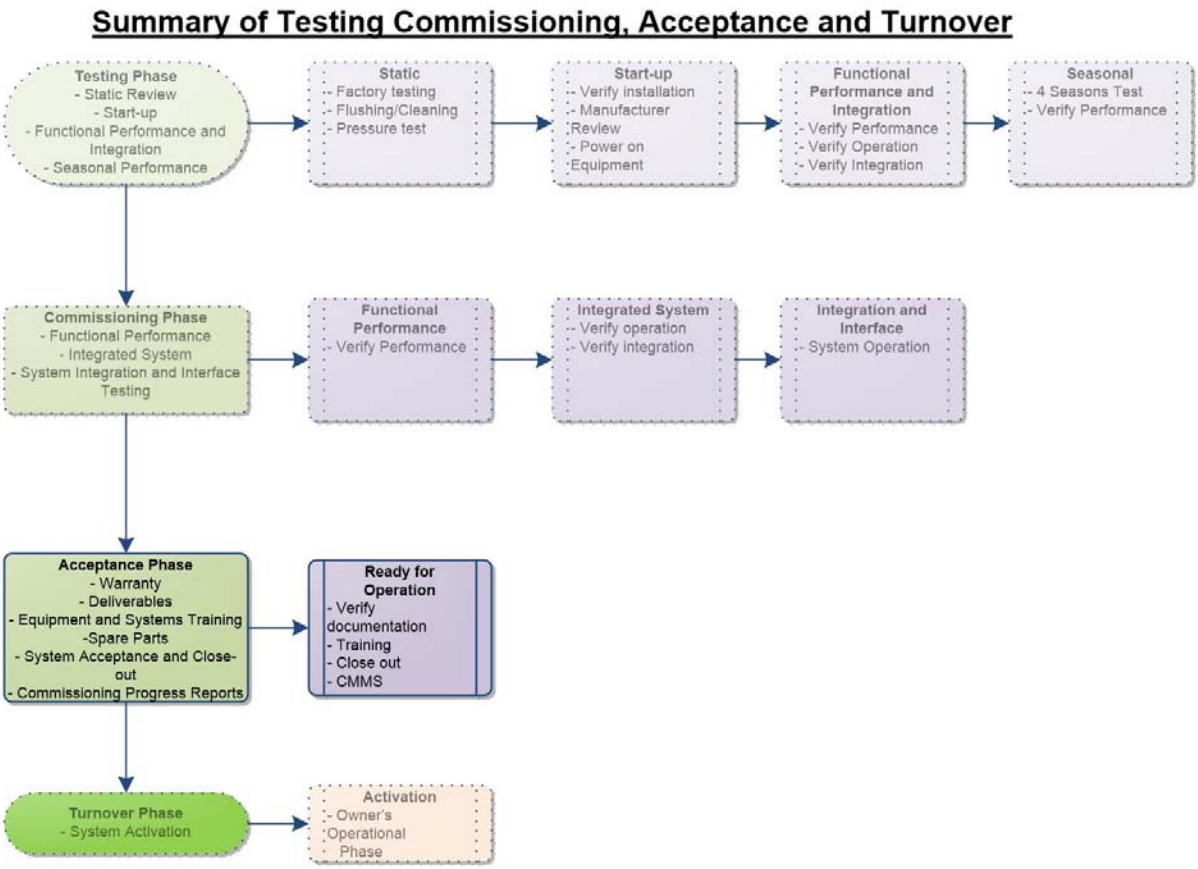

The requirements for acceptance will be detailed in the contract documents. The Commissioning Team will co-ordinate with the consultants to verify that the contractor has completed its requirements to achieve substantial and/or total performance.

2.5.1 Verify Documentation

As a minimum, the documentation required for each project is the operation and maintenance manuals, training documents, and as-built drawings. This documentation must be created in an acceptable format, be received in a timely manner, and maintain a high- degree of accuracy and quality of content. These documents provide the foundation of knowledge required to manage the facility. Documentation shall include, but not limited to:

- Commissioning Reports
- Commissioning Issues Tracking Report
- Seasonal Performance Testing Report
- as-Built Record Drawings
- Operating and Maintenance Manuals
- Systems Operating Manual

- Systems and Equipment Training
- Spare Parts
- Warranty Documentation.
- Close-Out Procedures
- Hospital Simulations (if applicable).

2.5.2 Testing and Commissioning Report(s) (T&C Report)

1. The T&C Report is the responsibility of the contractor and the commissioning team. This report is a condition of acceptance.
2. The commissioning team will prepare the final T&C Report which will identify that the testing and commissioning stages have been completed successfully and whether the results meets the basis of design. The report will include copies of all test and commission results.
3. The T&C Report will identify any outstanding deficiencies and how they affect the performance of the building.
4. The TCAT team will provide input to the consultants and contractors to establish the data required to prepare this documentation.
5. The contractors' reports shall include:
    - Testing schedule
    - Completed test forms
    - Completed equipment start-up forms including maintenance information for each piece of equipment.
6. The commissioning team reports shall include:
    - Comments and recommendations of testing schedule.
    - Comments and recommendations of testing forms received.
    - Comments and recommendations of systems performance test results.
    - Comments and recommendations of integrated systems test results.
    - Deficiency list completion.
    - Confirmation of training schedule.
    - Issues tracking report.
7. The consultants' reports shall include:
    - Conformation that testing results received meets the basis of design.
    - Confirmation that commissioning test results received meets the basis of design.
    - Confirmation that shop drawings and as-built drawings meets the specification requirements.
    - Issuing of deficiency lists and confirmation that they have been completed.
    - Confirmation that the turn over procedure has been completed.

2.5.3 As-Built (Record) Drawings

1. Further requirements for as-built (record) drawings may be identified in the contract documents. See Appendix D for more details on the as-built drawings. The As-builts shall follow SickKids Autocad format. The methodology for quality control during the preparation of these documents must be followed.

2. The red-line as-built drawings are the responsibility of the contractor. A copy of the red-line drawings shall be provided at least 20 business days in advance of training or 30 business days in advance of substantial performance and are a condition of acceptance.
3. The as-built drawings are the responsibility of the contractor. They are based on the red-line drawings and must be provided, and approved by the hospital and the consultant, prior to acceptance.
4. A final update of the red-line drawings and as-built drawings may be required as a result of changes made during final deficiency clean-up. If so the update of the as-built drawings would be a condition of total performance.
5. Prior to closing of walls and ceilings, the contractor shall review the red-line as-built drawings with the consultants, commissioning authority and Facilities Operation.
6. The TCAT team will provide input to the consultants and contractors to establish the data required to prepare this documentation.

2.5.4 Operation and Maintenance Manuals (O&M Manuals)

1. Further requirements for O&M Manuals may be identified in the contract documents. See Appendix D for more detail on the Operation and Maintenance Manuals. The methodology for quality control during the preparation of these documents must be followed.
2. The O&M Manuals are the responsibility of the contractor. A working draft shall be provided at least 20 business days in advance of training, or at least 30 business days in advance of substantial performance, whichever comes earlier. Final draft version of the O&M Manuals, approved by the hospital, is a condition of acceptance.
3. A final update of the O&M manuals may be required as a result of changes made during final deficiency clean-up. If so the update of the O&M manuals would be a condition of total performance.
4. The TCAT team will provide input to the consultants and contractors to establish the data required to prepare this documentation.
5. The contractor shall provide the CMMS information for the equipment and system.
6. The contractor shall provide updated asset data for all equipment requiring maintenance as per SickKids Standards. This includes information on the removal of all assets from service, as part of the project. These changes are a requirement for acceptance by SickKids.

2.5.5 Systems Operating Manual

1. See Appendix C for more detail on the Systems Operating Manual (SOM).
2. The SOM is a reference source for operations staff, which describes the design parameters and operating performance of the systems.
3. Further requirements for SOM may be identified in the contract documents. The methodology for quality control during the preparation of these documents must be followed.

4. The SOM is the responsibility of the Commissioning Authority with input from the consultants and contractor. A working draft shall be provided at least 20 business days in advance of training, or at least 30 business days in advance of substantial performance, whichever comes earlier.
5. A final update of the SOM may be required as a result of changes made during final deficiency clean-up. If so the update of the SOM is to be provided prior to total performance.
6. The TCAT team will provide input to the consultants and contractors to establish the data required to prepare this documentation.

2.5.6 Systems and Equipment Training

1. Training shall be provided for all new equipment, technology, systems, operational methods or maintenance methods.
2. Further requirements for training may be identified in the contract documents.
3. The contractor will develop a training schedule and agenda in co-operation with the Owner's Facilities Operation Manager, Project Manager, Consultants and Commissioning Authority. The dates and duration for each day, and required attendees, will be confirmed with the hospital. The schedule will include for multiple classes to suit operator shift requirements.
4. Training shall be provided to Facilities Operation Staff and the End User Group by the Contractor.
5. The schedule will be orderly in that mechanical, electrical and general disciplines are not scheduled on the same days.
6. The contractor will develop a course agenda which will be reviewed by the TCAT team for acceptability. The trade contractor or manufacturer will ensure all training is of acceptable quality and content and that it meets the owner's requirements. The contractors and manufacturers will follow the approved agenda.
7. A typical agenda shall include:
    a. Introduction to the manufacturer or contractor.
    b. A list of contacts and phone numbers etc., will be provided.
    c. Hand out material will be provided
    d. The design of the equipment or system will be reviewed.
    e. The operation of the equipment or system will be reviewed.
    f. The maintenance requirements of the equipment or system will be reviewed.
    g. The emergency procedures will be reviewed.
    h. Troubleshooting procedures will be reviewed.
    i. The operating and maintenance manual will be reviewed.
8. The contractor will ensure that each trainer has provided an agenda and has experience with the training process.

9. The trainer for each session will be experienced with the operating and maintenance procedures for this particular equipment or system and have the necessary presentation skills to perform the training effectively.
10. Sufficient hand-out material in a format acceptable to SickKids will be provided by the contractor such that all participants will have training materials.
11. The draft O&M manuals and as-builts shall be available at the training sessions.
12. A copy of the red-line as-built drawings shall be available at the training sessions.
13. The trainer will prepare an attendance list for each training session. A copy of these lists will be forwarded to the SickKids Project Manager.
14. Training will be a condition of substantial performance, and total performance, depending on the timing of the training requirements as specified by the SickKids.
15. The contractor will provide electronic training material which duplicates the scope of each training session.

2.5.7 Spare Parts

1. The consultants will verify that the spare parts turned-over by the Contractors are in accordance with the contract documents.
2. Spare parts handover is a condition of substantial performance.

2.5.8 Warranty

1. The hospital (Facilities Operation) will report warranty issues to the Contractor or directly to the installation contractor or manufacturer who will conduct repairs and retest the associated equipment and system if required. (See Appendix A)
2. Just prior to the end of the warranty period the contractors, consultants and the commissioning team will meet at the facility to review and provide recommendations on:
    - Outstanding deficiencies
    - Warranty issues
    - Operating issues
    - Maintenance issues
    - System performance issues.

2.5.9 Acceptance

1. Acceptance procedures are outlined in the contract documents.
2. The commissioning authority will provide recommendation to the SickKids Project Manager for acceptance.
3. The consultant shall provide recommendation to the SickKids Project Manager for acceptance.
4. The SickKids Project Manager will seek approval from the SickKids stakeholders prior to acceptance.

5. The SickKids Project Manager will accept the system/facility on behalf of SickKids.

2.6 Turnover

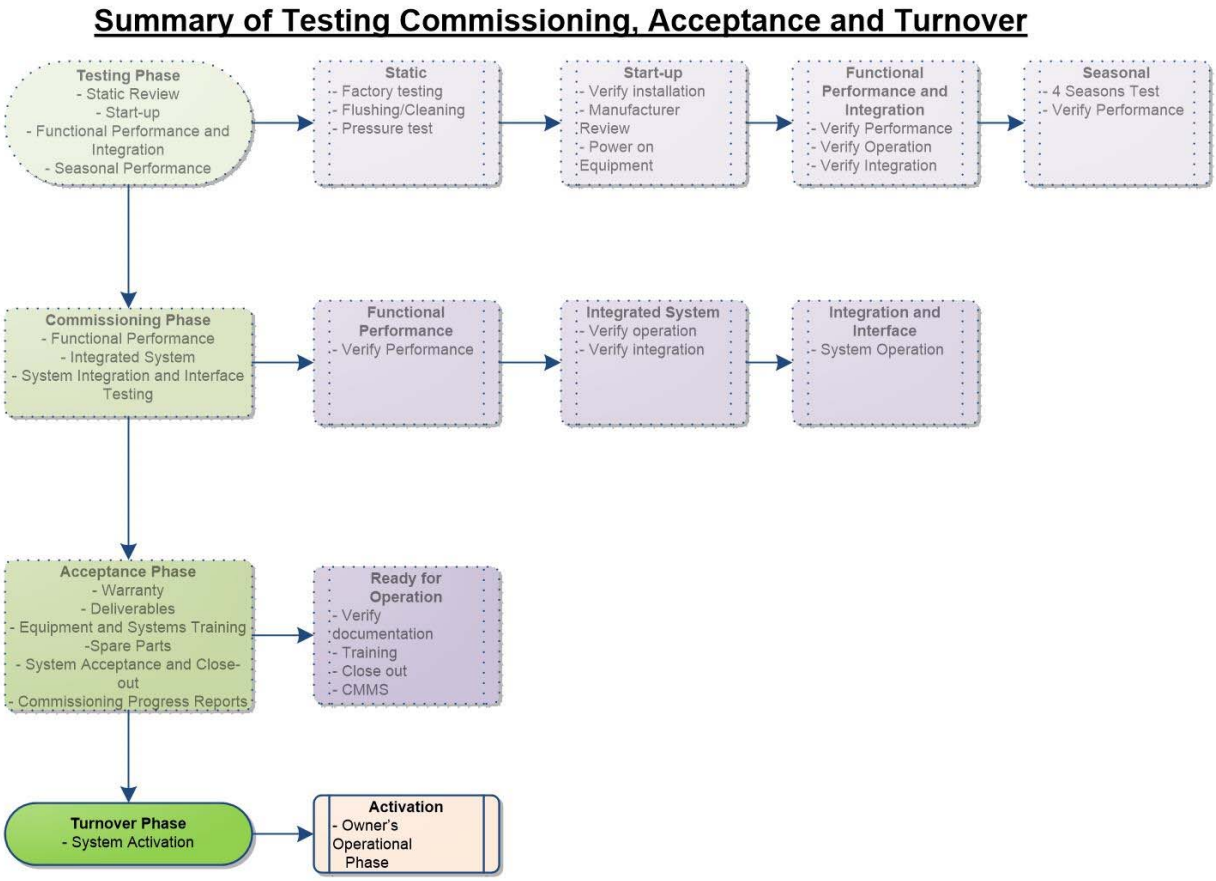

The purpose of the turnover phase is to ensure that the system or facility is fit for the purpose intended, including the operational requirements.

For simpler systems this may be as simple as a sign off process between the SickKids Project Manager and the business stakeholders. For more complex system there may be an entire activation process.

Responsibilities include:

SickKids Facilities Operation – Responsible

SickKids Project Manager – Support

Commissioning Authority – Support

Consultant – Support

Contractor – Support.

2.6.1 Activation

The activation of a facility is a process that follows the project from its inception through completion to opening day. The objective of the process is to deliver a fully functional facility, compliant with all of the terms and conditions of the contract documents including codes Standards and requirements to obtain occupancy and the hospital license.

The activation process also establishes the facility meets the current operational needs. All staff must be fully trained and intimately familiar with operating and maintaining the facility. All operating and technical documentation must be accurate and effectively stored to allow easy access.

As part of the activation process the systems will be monitored and trend logs generated to ensure the systems are meeting the hospital's requirements.

2.6.2 Independent Testing

Simulations provide an ideal opportunity to fine tune the systems and to performance test all of the systems under load.

The commissioning team will performance test selected components and systems during this stage to ensure effective and reliable operation beginning opening day.

2.6.3 Acceptance

As part of the activation process Facilities Operation will identify, to SickKids Project Manager, deficiencies, warranty issues or requested changes to the system or facility. The SickKids Project Manager will act on these as appropriate.

Once all items have been rectified or resolved Facilities Operation will accept the system from the SickKids Project Manager.

2.6.4 Go-Live

Once all systems have been accepted and all documentation is in place, the system or facility will be able to "Go-Live".

A TCAT Test Forms

This section describes the requirements for test forms to be produced and to be utilized as record documentation of the TCAT process. Where required the documentation is to be compliant with all applicable Provincial and Federal Regulations.

1. Refer to CSA Z8001-13 Commissioning of Health Care Facilities for sample test forms and commissioning datasheets. All forms are to be submitted to SickKids and the Commissioning Authority for approval before being used.
2. The pre-functional and start up test forms are to be prepared and completed by the appropriate contractor. A copy is to be forwarded to the construction manager or general contractor on a monthly basis in electronic form. The originals are to remain in a hard covered binder, which will be turned over to SickKids at substantial performance. A complete set of completed test forms are to be turned over to the Commissioning Authority prior to start of the Commissioning Phase and to SickKids in electronic form prior to substantial performance and total completion.
3. Testing shall be done “end to end” in that all tests shall include operation of the end device (field device) and shall include tracking for correct response at the Building Automation Systems.
4. The contractors will enter the test results on the forms. If the tests do not achieve the results required by the specifications or regulations the contractors will correct the problem and repeat the test.
5. The contractors and equipment manufacturers will conduct the contractor’s performance tests. They will complete the forms provided by the manufacturers, which verifies the installation and operation of the system.
6. The tests will be witnessed either by the appropriate SickKids representative, the consultant, and or Commissioning Authority and the construction manager or general contractor.
7. The contractor and the witnessing body will sign the test forms.
8. The functional performance and integration test shall commence once all pre-functional and start-up testing has been completed and the system operation has been confirmed by the contractor.
9. The commissioning authority with input from the commissioning team shall develop the performance test procedure for all equipment and systems to be tested.
10. The commissioning authority with input from the commissioning team shall develop an integration test matrix listing all the systems to be tested and expected results during the integration test.
11. The commissioning authority shall direct the commissioning team and contractor in the implementation of the integration test and document the test results.
12. Responsibilities:

    SickKids Facilities OPeration – Advisory

    SickKids Project Manager – Advisory

    Commissioning Authority – Responsible

    Consultant – Review

Contractor – Responsible.

A.1 Test Form Categories

1. Test forms are to be created for each stage of testing including:
   - Pre-functional tests
   - Start-up tests
   - Functional Performance and Integration tests
   - Seasonal Performance, tests Hospital Integrated Interface System tests.

A.1.1 Mechanical Test Forms

1. Mechanical test forms and tests will include, but not limited to the following tests:
   - Drainage tests
   - Domestic piping pressure tests
   - Duct leakage pressure tests
   - Chilled Water piping pressure tests
   - Hot Water piping pressure tests
   - Steam piping pressure tests
   - Air and hydronic flow tests
   - System temperature tests
   - Sprinkler piping pressure tests
   - Halocarbon refrigerant system leak test

A.1.2 Electrical Test Forms

1. Electrical test forms and tests will include, but not limited to the following tests:
   - Cable testing
   - Electrical distribution testing
   - Co-ordination study
   - Electrical Field Devices Inspection.

A.2 Pre-functional Tests

1. Pre-functional test forms and tests will include:
   - Completion of piping fittings and field installed devices
   - Piping and ductwork pressure leak test
   - Cable testing
   - Shipping bolts removed
   - Vibration isolators unrestrained
   - Equipment identification completed
   - Thermal insulation completed
   - Conduit and cable fire-stopping completed
   - Grounding completed.

A.3 Start-up Tests

1. Start-up test forms and tests will include, but not limited to:

- Correct motor rotation
- Check for excessive vibration
- Inspection for gland and seal leaks
- Pump, fan and equipment startup
- Check breaker size and whether it trips
- Check motor overload size and whether it trips.

A.4 Functional Performance and Integration Tests

1. The functional performance and integration test is performed with the system in full operation. The system is exercised through all possible scenarios.
2. The functional performance and integration test forms will be prepared by the Commissioning Authority with input from the commissioning team. The functional performance and integration tests will be conducted by the Commissioning Authority with assistance from the contractors.

B Hydronic and Air Balancing

This section includes the requirements for hydronic and air balancing of the mechanical system. The requirements for air and Hydronic Balancing will be included in the specifications by the mechanical consultant and shall comply with the requirements of NEBB and /or AABC.

B.1 Typical Project Structure

1. The hydronic and air balancing contract will be by the mechanical contractor. The balancing contractor will report to the mechanical contractor.
2. The balancing contractor is an integral part of the commissioning team and will co-ordinate with the Commissioning Authority.
3. The mechanical specifications identify the work that the mechanical contractor must complete prior to the balancing contractor starting their work.

B.2 System Balancing

B.2.1 Hydronic Systems Testing, Adjusting and Balancing

1. The balancing contractor will have reviewed the piping installation and provided reports regarding balancing valves and their locations. They will have received the shop drawings for the mechanical equipment to obtain the necessary data to balance the piping system, i.e. pump curves, equipment pressure drops, etc. The remaining data that they require will be documented in the construction drawings and specification.
2. The mechanical contractor will have flushed the piping systems and under the direction of the chemical treatment contractor, treated the water. Final samples will have been tested and the results reviewed by the consultant.
3. The balancing contractor will proceed to set balancing valves to the desired settings and verify hydronic flows throughout the systems.
4. Should the balancing contractor find major discrepancies with their measurements and the basis of design, they will immediately inform the consultant. The problem will be rectified as soon as possible.
5. The balancing contractor will, on a daily basis, provide deficiency reports to the contractor and the Commissioning Authority. It is important that these deficiencies are corrected immediately to maintain the construction schedule.
6. The balancing contractor will provide an interim balancing report within two working days of completion of a system. This report will be reviewed by the consultants and the Commissioning Authority. Any discrepancies with the results and the basis of design must be corrected immediately.
7. The final balancing report will be provided within two weeks of completion of balancing of all the hydronic systems.
8. The balancing procedures and data required to be entered into the report are documented in the specification.

B.2.2 Air Systems Testing, Adjusting and Balancing

1. The balancing contractor will have reviewed the ductwork installation and provided reports regarding balancing dampers and their locations. They will have received shop drawings for the mechanical equipment to obtain the necessary data to balance the ductwork systems, i.e. fan curves, equipment pressure drops, etc. The remaining data that they require will be documented in the construction drawings and specification.
2. The mechanical contractor will have pressure tested the ductwork and completed the equipment start up procedures.
3. The contractor will have cleaned the ductwork, equipment and facility so that it is ready for continual air handling unit operation.
4. The balancing contractor will proceed to balance the ductwork systems. The procedures are documented in the specifications.
5. Should the balancing contractor find major discrepancies with their measurements and the basis of design they will immediately inform the consultants. The problem must be rectified as soon as possible.
6. The balancing contractor will, on a daily basis, provide deficiency reports to the contractor and the Commissioning Authority. It is important that these deficiencies are corrected immediately to maintain the construction schedule.
7. The balancing contractor will provide an interim balancing report within two working days of completion of a system. This report will be reviewed by the consultant and the Commissioning Authority. Any discrepancies with the results and the basis of design will be corrected immediately.
8. The final balancing report will be provided within two weeks of completion of balancing of all the ductwork systems.
9. When balancing is completed the balancing contractor and the Commissioning Authority will conduct performance testing on the air handling unit.
10. The mechanical consultant will review the balancing report and compare the data to the basis of design and specification performance data.

B.2.3 Balancing Contractor & Controls Contractor Co-ordination

1. The controls contractor must be available when the balancing contractor is conducting their work. The co-ordination will be for all required functionality including but not limited to the following:
    - Commanding control valves open and closed
    - Setting up mixing dampers
    - Setting up pressure and differential pressure controls
    - Setting up fan tracking controls
    - Setting up VAV box minimum and maximum set points
    - Setting up static pressure controls.

C Systems Operating Manuals (SOMs)

This section describes the requirements for the Systems Operating Manuals (SOM). The SOM is intended to provide an understanding of how a system is intended to function inclusive of the design assumptions. This will provide for design review ease and better understanding of how the system performs under different conditions. The SOM shall be prepared by the commissioning authority with input from the consultants and contractors.

C.1 Application

1. The consultants will provide construction, CAD (Autocad format) drawings on a USB Drive in accordance with the specifications and SickKids Standards. The contractors will provide copies of the as-built shop drawings and equipment operating and maintenance manuals in PDF format. The contractors will also provide information regarding equipment locations and schedules.
2. The SOM is to be used as a training tool and should be initially assembled early in the construction stage. It is recognized that the SOM will evolve as construction progresses. The SOM first draft will be available for review, by the SickKids, 20 business days prior to start of training. The final document will be available 3 weeks after the commissioning authority completes the performance testing. The final document will be updated after the seasonal performance testing has been completed.

C.2 SOM Structure

The Systems Operating Manual will be divided into volumes, with each volume sub-divided into chapters.

Volume Structure – Large Projects

The Volume structure for large projects will consist of, but not limited to the following:

1. Volume 1 - Building Services (energy sources, plumbing and drainage, fire protection, building HVAC)
2. Volume 2 - Electrical Systems (Emergency Power System, Lighting System, Fire Alarm System, Security System, Communications and Monitoring Systems)
3. Volume 3 - Heating Systems
4. Volume 4 - Chilled Water Systems
5. Volume 5 - Controls Systems
6. Volume 6 - Equipment Data Sheets / Commissioning Records
7. Volume 7 - Preventative Maintenance Program (to be developed by SickKids for inclusion in the SOM).

Volume 7 does not form part of the Commissioning Program. Each Volume will consist of an individual binder, complete with spine and front covers graphics, to be approved by the SickKids Project Manager.

Volume Structure – Small Projects

Small Projects will follow the large project Volume structure, except that Volumes may be combined in one or more binders. Where multiple Volumes are provided in one binder, they will be separated with a labeled tabbed divider.

C.3 Chapter Structure – All Projects

1. Each Volume will be sub-divided into chapters, the number and title of which will depend on the requirements of each project. Example chapters may include:
    - Building exhaust systems
    - Air conditioning systems
    - Normal power distribution
    - Emergency power distribution.
2. Each chapter will include the following information, and be presented in a format acceptable to the SickKids, or will be completed on a form to be provided by the SickKids:
    - Table Data
    - General system description
    - Design Criteria
    - System Location
    - System Redundancy
    - Energy Source
    - Normal and Emergency Power Operation
    - Emergency Procedures
    - Operating Schedule
    - Drawing Reference (list of design drawings)
    - Operating and Maintenance Manual Reference
    - System Setpoint Parameters
    - BAS/Controls Sequence of Operation
    - Operating Instructions
    - Operator's Notes
    - Schematic diagram of system operation
    - Interface/interaction with other systems.

C.4 SOM Content

1. Table Data

Provide a summary table which includes the following information:

- System name
- Reference Number
- Abstract
- A list of major associated equipment and equipment ID's
- Location of Equipment.

2. General Description

An expansion of the system abstract, the general description will provide a brief overview of the system.

3. Owner's Project Requirements

The Owner's Project Requirements will be summarized for the project.

4. Design Criteria

The basis of design data will be obtained from the construction documents, shop drawings and the equipment operating and maintenance manuals. The consultants will provide any data not identified in these documents.

5. System Location

1. The system location will identify the location of major equipment. A reproduction of the CAD drawings will also identify the location.
2. The areas in the building served by the system will be identified. In some cases it may be possible to add CAD drawings which have been color coded.

6. System Redundancy

Provide a description of redundancy levels provided by the equipment in the event of equipment failure.

7. Energy Source

The energy sources section will identify what energy sources service the equipment or system. For example:

- Air Handling Unit #1
- Heating water, converted to glycol
- Chilled water
- Steam for humidification
- 600V power from MCC #1
- 120V power from panel #001, circuit #02, circuit #04, circuit #06.

8. Normal and Emergency Power Operation

A description of all of the systems and/or parts which may operate on normal and emergency power.

9. Emergency Procedures

The emergency procedures will identify the recommended procedures which are contained in the main equipment manufacturers' documentation.

10. Operating Schedule

Describe the operating schedules applicable to the system, including automatic time clock operation, and methods for manual or remote "after-hours" operation.

11. Drawing Reference

Provide a reference list of As-Built drawings.

12. Operating and Maintenance Manuals Reference

Provide a cross-reference listing for equipment maintenance manuals.

13. Setpoint Parameters

The systems parameters section will identify the equipment and systems environmental setpoints, time of day schedules, alarm limits, current setpoints, time of delays, etc.

14. Sequence of Operation

The system operation section will describe how the system has been set up to operate. This section will reference other documentation where more detail can be found.

15. Operating Instructions

Provide descriptions of system start-up requirements. This will be modified by the building operators as required.

D Operation and Maintenance Manuals (O&Ms) and As-builts

This section describes the requirements for the Operation and Maintenance Manuals (O&Ms) and the as-builts (record) requirements for the Facility. The O&Ms are intended to provide an understanding on how to safely and efficiently operate and maintain the equipment and systems. The O&Ms and as-builts shall be prepared by the contractors and reviewed by the consultants and commissioning authority. The As-builts shall follow SickKids Autocad format.

D.1 Application

1. The consultants will provide construction, CAD (Autocad format) drawings on a USB Drive in accordance with the specifications and SickKids Standards. The contractors will provide copies of the as-built shop drawings and equipment operating and maintenance manuals in PDF format. The contractors will also provide information regarding equipment locations and schedules.
2. Provide minimum three (3) hard copy or as stipulated in the contract and one soft copy (PDF) of the Operating and Maintenance Manuals. Hard copy of the O&Ms shall be consolidated in hardcover “D” ring binders with each binder sized to include approximately 25% spare space for future data.
3. Operating and maintenance instructions are to be project specific to the equipment supplied and installed under the project and related to the building.

D.2 O&M Structure

The Operation and Maintenance (O&M) Manuals shall be divided into volumes, with each volume sub-divided into chapters. The following information shall be included in the O&M manuals:

1. On the front cover, Mechanical (or the appropriate Discipline; Electrical, Architectural, Security, etc.) Operating and Maintenance Manuals, Project Name, Date
2. List Consultants, Contractors and Sub-Contractors names, address, telephone and fax numbers, main contact person, email addresses.
3. Equipment manufacturer names and Local Supplier, address, telephone and fax numbers, main contact person, email addresses.
4. Table of Content and corresponding index tab sheet.
5. Copy of “Reviewed’ or Reviewed as Noted” shop drawing with the manufacturer’s/supplier’s name, address, telephone and fax numbers, main contact person, email addresses.
6. Test reports, start-up sheets and test certificates issued by Governing Authority.
7. Operating Information
    1. Operating instruction for the equipment and system components
    2. Description of control strategy, include BAS sequence of operation where applicable
8. Maintenance Information
    1. Recommended maintenance practices and frequency for servicing the equipment
    2. How to maintain and access the equipment
    3. Tools required for maintenance and estimated time for maintenance
    4. Complete parts list and part number
9. Troubleshooting Information
    1. Description of actions to be taken during and emergency or equipment failure
    2. Step by step troubleshooting instruction

3. Safety protocol while troubleshooting

10. Performance Information
    1. Completed equipment and system start-up sheets. Provide blank sheets for future reference.
11. Copies of Warranties

D.3 Volume Structure – Large Projects

The Volume structure for large projects will consist of, but not limited to the following:

<u>Mechanical</u>

1. Volume 1 - List Consultants, Contractors and Sub-Contractors names, address, telephone and fax numbers, main contact person, email addresses.
   - Equipment manufacturer names and Local Supplier, address, telephone and fax numbers, main contact person, email addresses.
   - Warranties
2. Volume 2 - Building Services (energy sources, site work)
3. Volume 3 - Plumbing and Drainage, Fire Protection
4. Volume 4 - Hydronic Heating (Boilers, Pumps, Radiation, etc.)
5. Volume 5 -Cooling (Chillers, Cooling Tower, Pumps, Fan coil Units, etc.
6. Volume 6 - HVAC (Air Handlers, Fans, etc.)
7. Volume 7 - Controls and Electrical Work (BAS, MCC, Power Feed, Metering, etc.)

<u>Electrical</u>

1. Volume 1 - List Consultants, Contractors and Sub-Contractors names, address, telephone and fax numbers, main contact person, email addresses.
   - Equipment manufacturer names and Local Supplier, address, telephone and fax numbers, main contact person, email addresses.
   - Warranties
2. Volume 2 - Building Services (Site work)
3. Volume 3 - Power Systems (Emergency and Normal)
4. Volume 4 - Lighting System (including lighting controls)
5. Volume 5 - Fire Alarm System and Security System
6. Volume 6 - Communications and Monitoring Systems (Nurse Call, Patient Wandering, RTLS)

<u>Architectural</u>

1. Volume 1 - List Consultants, Contractors and Sub-Contractors names, address, telephone and fax numbers, main contact person, email addresses.
   - Equipment manufacturer names and Local Supplier, address, telephone and fax numbers, main contact person, email addresses.
   - Warranties
2. Volume 2 - Building Services (Site work)
3. Volume 3 - Envelope and Glazing
4. Volume 4 - Door and Door Hardware
5. Volume 5 - Paint and Colours, Flooring
6. Volume 6 - Ceiling (Lay-in tile, Acoustic)

D.4 CMMS Data

SickKids has implement a Computer Maintenance Management System (CMMS) Archibus to manage the maintenance of the building equipment and systems. As part of the CMMS SickKids has implemented a 'Bar Coding' System to tag and identify the equipment. The contractor is required to tag all equipment (new and/or re-used existing equipment) using the SickKids Bar Coding System. SickKids will provide the Bar Coding equipment and format for tagging of the equipment.

As part of any project, the consultant is required to identify the requirements of the CMMS in the project document and the Contractor is required to provide this information at the turnover of the project. CMMS information shall be, but not limited to the following:

1. Application – identify the equipment.
2. Frequency of maintenance based on the manufacturer recommendations.
3. Special Instructions – identify any requirements to be implemented prior to start of the maintenance procedures.
4. Check Points – Identify manufacturer recommended maintenance procedures.
5. Tools and Materials – Identify any tools or materials required for the equipment maintenance.

1 **SUBSTITUTIONS**

1.1 Whenever Products are specified exclusively by trade name, manufacturer's name or by catalogue reference, use only those items, unless written approval for substitution is obtained from Consultant.

1.2 No substitutions will be permitted without prior written approval of the Consultant.

1.3 Proposals for substitutions may only be submitted after award of Contract.

1.4 Substitutions submitted on shop drawings without following requirements of this Section prior to submission of the shop drawings will cause the shop drawings to be rejected at any time. Consultant’s review of shop drawings shall not be construed as approval of substitutions.

1.5 Requests for substitutions must include statements of:

.1 Description of proposed substitution.

.2 Respective costs of items originally specified and the proposed substitution.

.3 Compliance with the Building Codes and requirements of authorities having jurisdiction.

.4 Affect concerning compatibility and interface with adjacent building materials and components.

.5 Compliance with the intent of the Contract Documents.

.6 Reason for the request.

1.6 Proposed substitutions will be considered only under the following conditions:

.1 If the materials and products specified are not available; or

.2 If substitute materials and products to those specified, which are brought to the attention of and considered by the Consultant as equivalent to those specified, will not change the Contract Price and Contract Time; or

.3 If substitute materials and products to those specified, which are brought to the attention of and considered by the Consultant as superior to those specified, will not change the Contract Price and Contract Time; or

.4 If a material or product is specified together with a requirement for performance and, in the opinion of the Contractor, the specified material or product will not produce the required results.

1.7 There is no obligation on the part of the Consultant or Owner to accept proposed substitutions. Acceptance of proposed substitutions by Owner does not relieve the Subcontractor's responsibility under the Contract.

1.8 Should proposed substitution be accepted either in part or in whole, bear full responsibility and costs when substitution affects other work on the project. Pay for design and contract document changes required as result of the substitution.

1.9 Amounts of all credits arising from acceptance of substitutions will be determined by the Consultant and the Contract Price adjusted accordingly.

1.10 Wherein the expression "other acceptable equivalents" or similar expressions in specification Sections, submissions under the expression shall be as specified in this Section.

End of Section

NORR

SUBSTITUTION REQUEST FORM

Substitution Request No: _____ **Date:** _____

Project: _____ **Project No:** _____

Contractor: _____

Specified Product Specification Reference

Section Number	Section Title	Paragraph Number
_____	_____	_____

Proposed Substitution

Manufacturer and Product Trade Name _____

Address _____ **Phone Number** _____

Contact Name _____ **Model Number** _____

History of Product New Product ____ 2-5 years old ___ 5-10 years old __ More than 10 years old_____

Similar Installation Project Name & Address _____

_____

Consultant _____ Owner _____

Proposed Substitution Affects Other Parts of Work No ____ Yes, explain: _____

_____

_____

Differences Between Proposed Substitution and Specified Product _____

_____

_____

_____

Reason For Not Providing Specified Product _____

_____

_____

_____

Changes to Contract Price Add/Deduct $ _____

Changes to Contract Time Add/Deduct _____ days

NORR

SUBSTITUTION REQUEST FORM

Contractor's Declaration

The Contractor Declares that:

- Proposed substitution has been fully investigated and determined to be equivalent or superior in all respects to specified product, and complies with requirements of authorities having jurisdiction.
- Same warranty will be furnished for proposed substitution as for specified product.
- Cost data as stated above is complete. Claims for additional costs related to accepted substitution which may subsequently become apparent are to be waived.
- Proposed substitution does not affect dimensions and functional clearances.
- Proposed substitution is compatible with adjacent materials and assemblies.
- Coordination, installation, and changes in the Work as necessary for accepted substitution will be complete in all respects.

Signed By: _____ Date: _____

Supporting Data Attached: ☐ Drawings ☐ Product Data ☐ Samples ☐ Reports ☐ Other _____

Consultant's Review

☐ Substitution Accepted – Provide submittals in accordance with Specification requirement.

☐ Substitution Accepted as Noted – Provide submittals in accordance with Specification requirement.

☐ Substitution Not Accepted – Use specified product.

Signed By: _____ Date: _____

Owner's Acceptance

Signed By: _____ Date: _____

Additional Comments:

☐ Consultant _____

_____

_____

☐ Contractor _____

_____

_____

☐ Owner _____

_____

_____

1 **SUMMARY OF WORK**

1.1 Provide staff, Subcontractor, Suppliers, and own forces with training in infection prevention and control procedures. Design and implement training seminar by an environmental consultant with healthcare experience and whose educational program has been approved by the Owner. Acceptable firms are but not necessary limited to the following:

.1 Maple Environmental (Kyle Prosser, 905-601-6301).

.2 Safetech Environmental Ltd. (Romeo Milano, Tel: 905-624-2722).

.3 Golder Associates (Jason McGonigle, Tel 905-723-2727 Ext. 256).

1.2 Directly engage and enter into a contract with the approved environmental consultant. Coordinate with the environmental consultant and include in the Contract Price the required number of training sessions to adequately cover the duration of the Project.

1.3 Prior to commencement and during the course of the Work, as required, promptly provide the Owner with written confirmation of such training by way of a certificate issued by the environmental consultant.

1.4 Owner's Infection Prevention Control Services (IPCS) will investigate and advise on the risks of organisms that exist in the Project area. The goal will be to determine any infectious risks where possible and eliminate infection risks associated with construction activities in order to protect patients and staff occupying this building.

1.5 During the course of the Work, IPCS will assess the risks related to the Project utilizing the Risk Assessment and Preventive Measures Checklist (Appendix I). The determination of risk will guide the need for barriers during the Project. The Owner will communicate the assessment to the Contractor and advise on any additional measures to protect functional areas of the hospital.

1.6 Inspection of on-going infection control procedures shall be undertaken on a regular basis by the Owner's infection control representative and the Contractor. The Owner's monitoring checklist is found in Appendix II.

1.7 IPCS may stipulate changes in protocols and barrier configurations if required to ensure the safety of the patients and the clinical environments. Barriers and hoarding are shown on the Drawings diagrammatically and as intent only. IPCS and Contractor to review on site barrier requirements. Construct barriers as per final instruction on site by the Owner at no additional cost to the Owner.

1.8 Definitions:

.1 Final cleaning is defined as; post construction cleaning as provided by the Owner’s workforce or Owner’s contracted cleaning service

1.9 Construction Personnel: Protective clothing is to be removed when exiting through patient areas or vacuumed when exiting through other areas as categorized by IPCS as specified in Appendix "I". Construction personnel will not pass through clinical areas of the hospital without approval from the IPCS or Owner.

.1 Daily outer garments must be clean and maintained at all times.

.2 Daily footwear will be maintained clean and dust free at all times.

.3 Daily protective headgear will be maintained clean and dust free at all times.

.4 Hospital identification will be worn and displayed in a manner visible to any individual or passer-by.

1.10 Transportation of Equipment/Supplies: Prior to commencement of the Work, IPCS and the Project team and the Contractor will establish paths and procedure for the transportation of clean/sterile supplies, equipment and construction materials, including the removal of construction debris. Additional information as indicated.

1.11 Surveillance: IPCS personnel will enhance surveillance as appropriate. Field review of the Work will be conducted on a regular basis with the Contractor as necessary.

2 REFERENCES

2.1 Canadian Standards Association (CSA Group):

.1 CAN/CSA-Z317.2, Special requirements for heating, ventilation, and air-conditioning (HVAC) systems in health care facilities.

.2 CAN/CSA-Z317.13, Infection control during construction, renovation, and maintenance of health care facilities.

3 WORK COVERED UNDER THIS CONTRACT

3.1 Any and all infection control procedures described in this Section and all such means, materials and methods that are required to contain and prevent Work environments from spreading infection to the adjacent Hospital environment.

3.2 Means, materials and methods include but are not limited to temporary hoardings and barriers, enclosures, containment capsules, vessels, and other air tight assemblies constructed to contain airborne particulate generated by the Work from/out of Hospital areas adjacent and outside the Work area. The employment of mobile HEPA filtered recirculation units will be required in Work areas such as inpatient areas, laboratories and other risk areas identified by the Owner or IPCS and also to maintain negative air pressure in general Work area(s) relative adjacent Hospital areas.

4 PRE-CONSTRUCTION

4.1 At Contract start-up meeting, at meetings convened prior to the start of the Work, at pre-installation meetings, and at regular progress meetings, review infection prevention and control procedures. The Owner's infection control representative will attend such meetings. Subjects to be reviewed include, but are not limited to, the following:

.1 General information on infection prevention measures are articulated in accordance with CAN/CSA-Z317.13.

.2 Project and/or phases are subjected to preventative measures assessment and categorization in accordance with CAN/CSA-Z317.13.

.3 Schedule mandatory infection control training for all construction trade staff. Only those trade staff that have successfully completed mandatory infection control training are permitted to work at the Hospital. Trade staff without documented infection control training will be disqualified from the job site. Delays attributed to non-documented staff will be at the cost and responsibility of the Contractor.

.4 General information on infection prevention measures is articulated.

.5 Patient populations that may be at risk are identified.

.6 Prevention measures for essential services (e.g. water, ventilation systems, electricity) that may be disrupted are provided.

.7 Integrity of the facility's exterior structure, spatial separations, ventilation and water supplies for any penetrations and infection control problems are reviewed and assessed daily to ensure all services that supply clinical areas are provided.

.8 Measures to control dust and routes to safely remove construction debris must be outlined and altered as necessary to protect all clinical areas and patients of the hospital. Traffic routes shall be in accordance with cited CSA standard or requirements of the Owner whichever is more stringent.

.9 Traffic patterns for construction workers and supply delivery routes for construction materials will be established to minimize risks to patients, staff and visitors per the Owner's requirements and as indicated.

.10 Identify all critical areas of the ventilation system to ensure protection of the system from construction dust and debris including the need for increased filter changes during construction.

.11 Properly seal penetrations to mitigate dust and moisture travel between clinical areas and construction site including the need to close down dampers temporarily to reduce circulation of contaminated air or fumes is assessed.

.12 The systems can provide the correct air exchange rates and pressure relationships in critical areas near construction activity.

.13 Properly adjust exhaust and supply air flow in the construction area to ensure "negative pressure" gradient between construction (negative) and clinical (positive) areas.

.14 Properly protect all exterior air intakes as necessary to ensure optimal incoming "fresh air".

.15 Criteria of inspections by Owner's infection control representative.

.16 Ceiling/Wall/Floor Access permits requirements prior to opening concealed spaces.

4.2 Vacuum cleaners:

.1 Vacuums shall be commercial grade complete with HEPA filters.

.2 HEPA filter shall be changed as recommended by the manufacturer or required by use. Maintain a filter change log at the Place of the Work, available for review by the Consultant

5 CONSTRUCTION

5.1 Breaches in infection prevention containment measures, as outlined in Appendix I or as prescribed by CAN/CSA-Z317.13 or by the IPCS where negative outcome (s) that may place staff and/or patients of the Owner's facilities at risk will result in "stop" construction orders to the Contractor by IPCS.

5.2 Construction area and all related traffic routes shall be maintained in an "acceptable" state of cleanliness as specified by the IPCS during the project without exception.

5.3 Cleaning will be provided as categorized by IPCS as specified in Appendix I. The Place of the Work must also be cleaned prior to and at completion of work as follows:

.1 Undertaken by Contractor and included in the Contract Price:

.1 Construction cleaning prior to reopening a supply air duct during construction.

.2 Construction cleaning completed prior to the removal of any containment barriers.

.3 Construction cleaning completed after the removal of any barrier.

.4 Construction cleaning immediately after completion of minor work performed after the removal of barriers.

.2 Undertaken by Owner and not included in Contract Price:

.1 Final cleaning by Environmental Services must be completed prior to occupancy.

5.4 Construction Cleaning is defined as the complete removal of "daily" construction debris, dust containment and mitigation measures during construction activities. Measures to contain and mitigate dust during construction activities include but are not limited to, daily vacuuming of the work area with a HEPA filtered vacuum device, wet mopping, wrapping and/or bagging of debris, using vacuum equipped tools, etc. Area is to be inspected and approved as clean by IPCS.

5.5 Transportation of Equipment and Supplies: Prior to construction, IPCS, the Consultants, and the Contractor will establish delivery paths, time and procedures for the transportation of trade carts, equipment, materials, and "clean" install equipment. Movements and storage of equipment and supplies through the hospital may include but is not limited to:

.1 Daily maintenance of all trade carts so that they are kept in a clean and dust free condition.

.2 Daily wipe down of all trade carts with an approved “hospital disinfectant”.

.3 Trade or supply carts of raw wood are NOT permitted. Exterior wood must be sealed to sustained daily cleaning and disinfection.

.4 Washdown of all waste carts after the disposal of any wastes and before the cart returns to the hospital.

.5 Removal of all packaging material from "final install" equipment prior to delivery through the hospital. Contractor shall consult with the IPCS or designate on packaging necessary to protect devices prior to final install

.6 Packaging materials permitted onto the construction site must be removed daily or as generated, whichever is more frequent.

.7 Transportation of equipment, materials/supplies and wastes is NOT permitted between the hours of 07:00 and 21:00 hrs. Owner or designate may grant limited exceptions in writing.

.1 For Project- specific delivery hours refer to Section 01 00 00, General Requirements.

.8 Incoming construction material must be handled in accordance with CAN/CSA-Z317.13. Materials must be protected from moisture and dirt.

.9 Oversized "new install" equipment must be delivered in accordance with measures outlined by the IPCS or designate. Procedures may include but is not limited to additional cleaning of “new equipment", cleaning of the hoarding to permit clear passage into the work area followed by immediate reinstatement of the hoarding.

5.6 Surveillance: IPCS or designate will determine frequency of site reviews of the construction area. Site review may include but is not limited to assessing the area for cleanliness and dust mitigation, worker compliance with measures as outlined, hospital approved workers/trades, etc.

.1 Security - site will have controlled access with appropriate signage to identify the area as a construction area and danger within.

.2 Security - access to site will be through a self-closing door that is locked at the conclusion of each day's activity. Keys to the site will be provided to the IPCS or the Owner.

.3 Contractor will conduct daily site reviews and document daily findings in a log book as specified by the IPCS or designate.

.4 Site cleaner will document frequency of cleaning as specified by the IPCS or designate.

5.7 Ventilation System and Negative Pressure Differential:

.1 Areas where work is being undertaken shall be isolated from occupied areas of the hospital using dust tight partitions and enclosures as described above.

.2 The Place of the Work will be maintained under negative pressure at all times in relation to the occupied areas of the existing building to prevent dust and airborne pathogens from entering the occupied areas of the existing building.

.3 Negative pressure shall be achieved through the use of dedicated (window or otherwise) exhaust units or, if direct access cannot be achieved, by HEPA filtered recirculation units that transfer filtered air from the Place of the Work into the occupied areas. Exhaust points will be reviewed with the Owner and the Consultant to ensure that the exhaust air from the Place of the Work is not affecting pedestrian routes and is not re-entrained back into the existing building through fresh air intakes.

.4 Provide construction exhaust/HEPA units and remove at the completion of the Work.

.5 Air systems serving only the Place of the Work will be shut down and all supply, return and exhaust openings shall be sealed to prevent dust and construction debris from entering the air system. As a further precaution, the air system will be reviewed at the end of the Work to determine if cleaning is required.

.6 Supply and return air ducts entering the Place of the Work are to be fitted with a pre-filter unit and sealed within the Place of the Work near point of entry or exit prior to the start of disruptive activity to prevent dust and construction debris from entering the air system. As a further precaution, the air system will be reviewed at the end of the Work to determine if c leaning is required.

.7 During construction, the seal only on the supply air duct may be removed after demolition and clean-up to permit ventilation within the construction area provided no other means is available.

.8 Areas adversely affected by changes in air flows outside the construction areas are to be re-balanced to comfortable levels as advised by the Consultant.

.9 Main HVAC infrastructure shall be protected from contamination in accordance with CAN/CSA-Z317.2 and CAN/CSA-Z317.13.

5.8 Contractor shall:

.1 When constructing the hoarding, install an electronic magnehelic gauge complete with recording capability and local audible alarm.

.2 Maintain a daily log for full duration of the construction and provide the data to the Consultant and Owner upon request.

5.9 Ensure that mandatory vacuuming and cleaning of Contractors and Subcontractors clothes is done, prior to leaving areas of the Work to prevent dispersion of dust.

5.10 Contractor to Provide their own mobile negative pressure enclosures in adequate numbers to align with the project schedule to do localized ceiling work. Use of Owner's mobile negative pressure enclosures is not permitted.

End of Section

PART - 1 GENERAL

1.1 SUMMARY

.1 Section Includes:

.1 Labour, Products, equipment and services necessary to complete the work of this Section.

1.2 SECTION INCLUDES

.1 This Section of the Work covers the requirements for demolishing, salvaging, relocating and removing wholly or in part the various items designated on the drawings or required to be removed or partially removed for the receipt of the Work of this Contract.

.2 Selective demolition includes, but is not necessarily limited to:

.1 Alteration and renovations to existing building.

.2 Cutting and removing of walls, ceilings, floor finishes, etc., in the existing buildings as indicated on drawings.

.3 Patching, making good walls, floors and ceilings including painting, as required.

.4 Removal of rubbish, debris, demolished fixtures, fitments and items not scheduled to remain Owner's property, resulting from the demolition and preparatory work.

.5 Dust Control during the operations of the work of this section.

1.3 QUALITY ASSURANCE

.1 Comply with pertinent codes, regulations and insurance carriers providing coverage for this Work.

.2 Execute the work in strict accordance with 'The Occupational Health and Safety Act and Regulations for Construction Projects' latest addition. Keep copy of the Act at the place of the Work at all times.

.3 Carry out demolition work in accordance with CSA S350-M.

.4 Submit fire safety plan in accordance with requirements of Owner.

1.4 SUBMITTALS

.1 Submit demolition and cutting schedule to Consultant for review. Schedule to show timing and phasing of the Work in the various areas of the existing building. Deviation from schedule will not be permitted without approval.

.2 Submit drawings to Consultant for review of demolition of structural elements.

.1 Make sure drawings bear the seal and signature of a licensed Professional Engineer, registered to practice in the Province of Ontario.

.2 Drawings to indicate extent of demolition and method of temporary shoring of existing structure where required.

1.5 **PROTECTION**

.1 Erect barricades, covered ways, barriers, scaffolding, screens, notice and warning boards and maintain all lights, signals and protection of all kinds for the protection of workmen on the Work, for the protection of property and for the protection of public.

.2 Use all means necessary to protect existing objects designated to remain and in the event of damage, immediately make all repairs and replacements necessary to the approval of the Consultant and at no additional cost to Owner.

.3 Provide protection required to enable existing building and equipment to remain in continuous and normal operations, and maintain construction schedule.

.4 Protect work in the existing building, such as floors, finishes, trim, etc., as completely as possible to hold the replacing of damaged work to a minimum

PART - 2 PRODUCTS

2.1 **MATERIALS**

.1 Temporary braces, tie-rods, clamps, supports and cratings: constructed in accordance with plans prepared by Contractor.

2.2 **TEMPORARY PARTITIONS**

.1 Erect Temporary Partitions / Dust-Proof Barriers / Hoarding prior to demolition. Adjust and relocate partitions as required for various operations of Work.

PART - 3 EXECUTION

3.1 **PREPARATION**

.1 Notify the Consultant at least seven (7) days prior to commencing of the work.

.2 The drawings do not purport to show all objects existing on the site. Before commencing the Work, carefully check drawings and verify with the Consultant regarding all objects to be removed and all objects to be preserved.

.3 Schedule all Work in a careful manner with all necessary consideration for the requirements of Owner, his employees and the public.

.4 Avoid interference with the use of, and passage to and from, adjacent buildings and facilities.

.5 Before shutting-down any system verify with the Owner and schedule acceptable shut-down date with minimum 14 days' notice.

.6 Before starting the operations, arrange with the appropriate trade concerned for the disconnection of all utility services, affecting the work.

.7 Preserve in operating condition all active utilities to remain.

3.1 **DRILLING OR CORING INTO EXISTING CONCRETE**

.1 Prior to coring and drilling into an existing concrete member (slabs, beams, columns and walls), provide full scanning, X-raying of the surfaces to locate rebars and other embedded items, such as pretensioned strands, electrical and communication conduits. Employ a professional structural engineer registered in the province of Place of the Work to review the Xray scanning report and provide recommendations for coring, drilling, trenching and proposed penetrations.

.2 Once the concrete reinforcement and other obstructions have been located, submit a coring request for review by Consultant, indicating located obstructions layout and proposed penetration locations.

.1 If obstructions are found, relocate proposed penetrations, anchors and cores in order to avoid damaging embedded items.

.2 Clearly mark existing concrete to show proposed penetrations.

.3 In certain cases, it may be necessary for the Consultant to review condition on site. In such cases, arrange a site visit by Consultant to review each proposed location.

.4 Proceed with coring and drilling only upon obtaining written approval for each condition.

.3 Indicate penetration locations on As-Built Drawings, showing the size of each hole and the distance in relation to grid lines.

3.2 **DEMOLITION AND PREPARATORY WORK**

.1 In order to afford the least interference with the efficient operations of the existing building and to keep the risk of fire to a minimum at all times, ensure that demolished materials are continuously removed from the buildings and grounds as they accumulate, that no hazard condition is left during non-working hours and that full measures are taken by sprinkling and other means to keep dust to a minimum and to confine what dust there is within the working area.

.2 Maintain proper and safe means of fire exit from all zones of the existing building to the approval of the authorities having jurisdiction.

.3 Confine operation to those parts of the buildings which are to be altered or renovated. Do not damage existing construction beyond that necessary for performance of new work and repair such damage as required.

.4 Carefully remove in re-usable condition, transport and store on site where directed by Owner and protect against damage all materials and equipment to be salvaged or relocated for reuse in the new work as directed by the Owner.

.5 Take possession of all other materials arising from the demolition work and remove from the site daily.

.6 Demolished materials become Contractor's property, unless such materials are identified on Contract Documents to be reused or turned over to Owner.

.7 Demolish work into sections of practical size for removal without alteration or damage to the existing building remaining in place.

.8 Cut openings through existing walls, partitions and floors. Establish exact location of steel reinforcing in existing concrete slabs or walls before holes are made. Be responsible for damage to existing steel reinforcing and be liable for structural failure. Make good surfaces disturbed with materials to match existing.

.9 Cut to accommodate new structural steel members.

.10 Sawcut floors, walls, ceiling and other elements before demolition is started, to minimize damage. Make cuts with clean, true, smooth edges. New openings required in existing walls and partitions shall be carefully cut and formed to blend into existing work.

.11 Where items are to be removed from existing structure or surfaces that are to remain in place, remove those items complete with hangers, brackets and other readily removable supports and fastenings:

.1 Remove bolts, but not inserts embedded in concrete or masonry.

.2 Remove bolt and rivet fastenings from steel structure.

.12 Join and make good new work to existing in such a manner that the joint is structurally sound and inconspicuous.

.13 Cuts, breaks and other temporary openings into existing surfaces, which are required for installation or application of new fixtures, fitments, materials or services shall be, at completion of work, patched and/or made good and finished to blend with surrounding finishes. Openings to allow passage of ducts shall be closed tight to perimeters of duct at all locations where fire dampers are required.

.14 Where fireproofing membranes or coverings to existing structural steel members and open web steel joists are disturbed, restore the fire protection with materials and methods acceptable by the authorities having jurisdiction.

.15 In areas where work is required to be performed over acoustic ceilings composed of lay-in panels in a supporting grid, carefully remove panels to avoid damage and replace when work is completed. If existing lay-in panels in a room are damaged and cannot be matched with new panels, then replace all the panels in that room with new units to the Consultant's approval at no additional expense to Owner.

.16 Materials and other equipment not required for re-use shall not be stored or sold from the site. Maintain the existing building in a weather and watertight condition at all times. Maintain security of existing building.

.17 Upon completion of demolition, leave interior surfaces clean and dust free.

3.3 **MAKING GOOD**

.1 Make good materials and finishes which are damaged or disturbed during the process of additions and reconstruction under the Contract. Where existing work is to be made good, match new work exactly with the old work in material, form, construction and finish unless otherwise noted or specified.

.2 Preparation for new finishes:

.1 Remove existing finishes, including painting.

.2 Fill cracks and depressions with suitable filler and finish smooth, as recommended by the manufacturer of the new finishes.

.3 Grind protrusions level with substrates and finish smooth.

.4 Remove all evidences of existing adhesive, grease, oil, soil and other encrustations of foreign material by washing, scraping and grinding if necessary.

.5 Clean and prepare substrates to receive new work.

3.4 **CUTTING AND PATCHING**

.1 Perform cutting, fitting, and patching to complete the Work. Do not cut, drill or sleeve load-bearing members without obtaining written approval for each condition.

.2 Cut rigid materials using power saw or core drill. Pneumatic or impact tools not allowed.

.3 Remove and replace defective and non-conforming work.

.4 Perform work to avoid damage to other work. Prepare proper surfaces to receive patching and finishing.

.5 Restore work with new products to match existing in accordance with Contract Documents.

.6 Fit work airtight to pipes, sleeves, ducts, conduit, and other penetrations through surfaces.

.7 At penetration of fire rated wall, ceiling, or floor construction, completely seal voids with fire rated material, full thickness of construction element.

.8 Refinish surfaces to match adjacent finishes; for continuous surfaces refinish to nearest intersection; for an assembly, refinish entire unit.

END OF SECTION

PART - 1 GENERAL

1.1 SUMMARY

.1 Section Includes: Labour, Products, equipment, and services necessary to complete the work of this Section, including but not limited to:

.1 Cold formed metal framing

.2 Runners, anchorages, bracing, bridging, connections and other components and accessories required for complete installation

.3 Exterior sheathing

.2 Related Requirements

.1 Comply with Conditions of the Contract, General Scope of Work, and Division 01 - General Requirements.

1.2 DESCRIPTION OF SYSTEM

.1 Structural Metal Stud Framing includes Wind Bearing Studs and Axial Load Bearing Studs.

.2 Wind Bearing Studs

.1 Wall studs subjected to lateral loads (no axial loads other than self-weight and the weight of applied finishes)

.2 Steel bridging

.3 Top and bottom track

.4 Head, sill and jamb members for wall openings

.5 Stud, bridging and track connections

.6 Top and bottom connections to the main structure including detailing to accommodate floor and/or roof deflections.

.3 Axial Load Bearing Studs

.1 Wall studs subject to lateral and axial loads

.2 Steel bridging

.3 Top and bottom track

.4 Lintel, sill and jamb members for wall openings

.5 Cross bracing for lateral loads

.6 Connections

1.3 DESIGN CRITERIA

.1 Design shall be based on Limit States Design principles using factored loads and resistances.

.2 Loads and load factors shall be in accordance with the building code. For wind load calculations, the reference velocity pressure, q, shall be based on a 1 in 50 probability of being exceeded in any one year for strength design and 1 in 10 for deflection.

.3 Resistances and resistance factors shall be determined in accordance with the Ontario Building Code and CSA-S136.

.4 Conform to requirements of ULC and authorities having jurisdiction for fire-rated assemblies.

.5 Stud depths are shown on the drawings. Adjust stud and joist material thicknesses and spacings, as required by the design criteria. Use greater or lesser stud and joist depths only if approved by the Consultant.

.6 Space wall studs at 400 mm maximum. Use lesser stud spacing if required by the design criteria.

.7 For studs and track the minimum design thickness exclusive of coating shall be 1.12 mm. Use greater stud and track design thicknesses if required by the design criteria.

.8 The minimum design thickness for bridging channel shall be 1.22 mm for studs. Use greater bridging channel design thickness if required by the design criteria.

.9 The minimum design thickness for clip angles shall be 1.52 mm for studs. Use greater clip angle thickness if required by the design criteria.

.10 Maximum flexural deflections under specified live or wind loads shall conform to the following:

.1 Wall studs supporting masonry veneer shall meet the requirements of CSA S304.1, with stud deflections limited to L/720.

.2 Wall studs supporting other finishes: L/360.

.11 Building sway due to all effects, 1/400 of building height or 1/500 of storey height.

.12 For wind bearing studs, design connections to accommodate vertical deflection movement of the structure, frame shortening and vertical tolerances without imposing axial loads onto the framing. Leave a minimum gap of 12 mm. Larger gaps may be required to accommodate structural movement. Co-ordinate with the Project Structural Engineer.

.13 For wind bearing studs, limit free play and movement in connections perpendicular to the plane of the framing to $\pm$ 0.5 mm relative to the building structure.

.14 Design Structural Metal Stud Framing components and assemblies to accommodate specified erection tolerances of the structure.

.15 Design bridging to prevent member rotation and member translation perpendicular to the minor axis. Provide for secondary stress effects due to torsion between lines of bridging. Do not rely on collateral sheathing to help restrain member rotation and translation perpendicular to the minor axis. Provide bridging at 1500 mm o.c. maximum for wind bearing studs, 1200 mm o.c. maximum for axial load bearing studs. Space bridging at equal intervals over the span length of the member. Closer spacings may be required to satisfy structural requirements.

.16 Design anchorage and splice details for bridging.

.17 Design for local loading due to anchorage of cladding and interior wall mounted fixtures where shown.

.18 Connections between light steel framing members shall be by bolts, welding or sheet metal screws.

.19 Allow for appropriate end eccentricities in the design of axial load bearing members.

.20 Design interior axial load bearing walls with a nominal lateral wind load of 0.24 kPa in combination with the required axial loads.

.21 Design diagonally braced stud walls to act as shear walls. The location of the shear walls and the applied factored lateral loads are indicated on drawings.

.22 For stud walls, provide head, sill and jamb members and connections to frame openings larger than 100 mm in any dimension.

.23 For stud walls anchor top and bottom track to structure at a maximum spacing of 800 mm o.c. Closer spacing may be required to satisfy structural requirements.

1.4 **SUBMITTALS**

.1 Submit engendered shop drawing:

.1 Engendered shop drawing submitted shall bear the stamp and signature of a qualified Professional Engineer registered in the Province of Ontario.

.2 Include all necessary shop details and erection diagrams. Indicate member sizes, locations, thicknesses exclusive of coating, coatings, and material types. Include connection details for attaching framing to itself and for attachment to the structure. Show splice details where permitted. Indicate dimensions, openings, requirements of related work and critical installation procedures. Show temporary bracing required for erection purposes.

.3 Indicate design loads.

.2 Submit three certified copies of mill reports covering chemical and mechanical properties, and coating designation of steel used in this work.

.3 Submit product data for mechanical fasteners indicating sizes, load capacities and type of corrosion protection.

.4 Submit on request, three representative pieces of framing component parts including mechanical fasteners if used.

.5 Submit on request, three copies of engineering calculations or data verifying the capacity of the members, including masonry connectors if specified, and the ability of the assemblies to meet the design requirements.

.6 Do not fabricate or construct until submittals other than field review reports are reviewed and approved.

.7 Submit three copies of field review reports.

1.5 **QUALITY ASSURANCE**

.1 Retain a Professional Engineer registered in the province of Ontario to design the Structural Metal Stud Framing; to prepare, seal and sign shop drawings; and to perform field review. Shop drawings shall show both design and installation requirements.

PART - 2 PRODUCTS

2.1 **MATERIALS**

.1 Steel conforming to CSA-S136, and to be identified as to specification, grade, mechanical properties and coating type and thickness, minimum recycled content 50%.

.2 Provide steel with metallic coatings conforming to one of the following ASTM Standards:

.1 ASTM-A653/A653M Standard Specification for Steel Sheet Zinc-Coated (Galvanized)

.2 Zinc-Iron Alloy Coated (Galvannealed) by the Hot-Dip Process ASTM A792/A792M Standard Specification for Steel Sheet, 55%Aluminum Zinc Alloy-Coated by the Hot-Dip Process

.3 Lightweight steel framing members forming part of the exterior building envelope shall have a minimum coating of Z180 galvanizing in accordance with ASTM-A653/A653M. Other coatings (e.g. aluminum-zinc alloy to ASTM A792/A792M) providing equal or better corrosion protection may be used.

.4 Sheathing: High performance exterior grade gypsum sheathing, meets or exceeds requirements of ASTM C1177/C1177M, water-resistant treated core, non-combustible when tested in accordance with ASTM E136, maximum flame spread 5 and smoke developed 0 when tested in accordance with CAN/ULC S102, 16 mm Dens-Glass Gold Sheathing by G-P Gypsum Corporation; 16 mm thick 'Securock Brand Glass-Mat Sheathing' by CGC; 'GlasRoc Sheathing' by CertainTeed, or approved equivalent.

.5 Sheathing screws: Type S-12, bugle head, self-tapping, rust-resistant, fine thread for heavy steel gauge.

2.2 FASTENERS AND WELDS

.1 Bolts and nuts conforming to ASTM A307 or ASTM A325. Provide Hot-dip galvanize bolts, nuts and washers.

.2 Sheet metal screws shall have a minimum coating thickness of .008 mm of zinc. Other coatings providing equal or better corrosion protection may be used.

.3 Welding materials shall conform to the requirements of CSA W59.

.4 Welding electrodes shall be of the 480 MPa minimum tensile strength series.

.5 Zinc rich paint for touching up welds and damaged metallic coatings shall conform to CAN/CGSB-1.181.

.6 Concrete anchors shall have a minimum coating thickness of .008 mm of zinc. Other coatings providing equal or better corrosion protection may be used.

.7 Powder actuated/low velocity fasteners are not permitted.

PART - 3 EXECUTION

3.1 GENERAL

.1 Fabrication and erection shall conform to the approved shop drawings. Modifications required to accommodate as-built conditions (other than minor dimensional changes) shall be submitted to Consultant for approval.

3.2 FABRICATION

.1 Except as noted herein, fabricated wall framing components shall conform to the requirements of CAN/CGSB-7.1.

.2 Where specified, provide cut-outs centred in the webs of members to accommodate services and though-the-knockout style bridging. Unreinforced cut-outs shall be limited to

the dimensions in Table 1. The effect of cut-outs on the strength and stiffness of the member shall be considered.

.1 The distance from the centreline of the last unreinforced cut-out to the end of the member shall be not less than 300 mm.

TABLE 1 - Allowable Dimensions for Unreinforced Cut-Outs			
Member Depth (mm)	Perpendicular to the Length of the Member (mm)	Parallel to the Length of the Member (mm)	Centre to Centre Spacing (mm)
92, 102	40 max.	105 max.	600 min.
>152	65 max.	115 max.	600 min.

.3 Length tolerances for members shall conform to Table 2.

TABLE 2 - Length Tolerances	
Member Types	Length Tolerances
Tracks	None
Wind Bearing Studs	Plus/Minus 3 mm
Axial Load Bearing Studs	Plus/Minus 1.5 mm

.4 Cross sectional geometry tolerances for members shall conform to Table 3.

TABLE 3 - Cross Sectional Geometry Tolerances					
Member Type	Member Depth A (mm)	Flange Width B (mm)	Lip Length C (mm)	Thickness t (mm)	Corner Angles
Joist, track or stud	-1, +2	-1, +2 Where sheathing is attached directly to the flange, the minimum flange width shall be 31 mm.	-0, +4	The tolerance on delivered steel thickness shall conform to CSA S136*	Plus/Minus 3 degrees

.5 The steel thickness exclusive of coating shall be marked on each member by embossing, stamping with indelible ink or by colour coding.

3.3 **FASTENERS AND WELDS**

.1 Insure that connected parts are in contact. Provide clamping before welding or installing screws as required.

.2 Companies engaged in welding shall be certified by the Canadian Welding Bureau to CSA W47.1. Companies shall have welding procedures approved and welders qualified for the base material types and thicknesses that are to be welded.

.3 Welds shall conform to CSA S136, CSA W59 and ANSI/AWS D1.3, whichever is applicable.

.4 For material less than 3 mm thick, shop drawings may show nominal weld leg sizes. For such material, the effective throats of welds shall not be less than the thickness of the thinnest connected part.

.5 Touch-up welds and coatings damaged by welding with zinc rich paint. Prior to touching-up prepare surface in accordance with paint manufacturer's recommendations.

.6 Sheet metal screws shall be of the minimum diameter indicated on shop drawings but not less than #8.

.7 Penetration of sheet metal screws beyond joined materials shall be not less than 3 exposed threads.

.8 Sheet metal screw thread types, drilling capability and installation shall conform to the manufacturer's recommendations.

.9 Sheet metal screws covered by sheathing materials shall have low profile heads.

.10 Install concrete anchors in accordance with manufacturer's recommendations.

3.4 **ERECTION**

.1 Methods of construction may be either piece by piece (stick-built) or by fabrication into panels (panelized) either on or off site.

.2 Erect Structural Metal Stud Framing true and plumb within the specified tolerances. Temporary bracing shall be employed wherever necessary to withstand all loads to which the structure may be subject during erection and subsequent construction. Temporary bracing shall be left in place as long as required for the safety and integrity of the structure. Ensure that during erection a margin of safety consistent with the requirements of the Ontario Building Code and CSA-S136 exists in the uncompleted structure.

.3 Erection Tolerances

.1 For the purposes of this Section, camber is defined as the deviation from straightness of a member or any portion of a member with respect to its major axis, and sweep is defined as the deviation from straightness of a member or any portion of a member with respect to its minor axis.

.2 For axial load bearing studs, out of plumbness and out of straightness (camber and sweep) shall not exceed 1/1000th of the member length.

.3 For wind bearing studs, out of plumbness shall not exceed 1/500th of the member length. Out of straightness (camber and sweep) shall not exceed 1/1000th of the member length.

.4 For track, camber shall not exceed 1/1000th of the member length.

.4 Studs shall seat into top and bottom tracks. The gap between the end of the stud and the web of the track shall not exceed 1.5 mm for axial load bearing studs or 4 mm for wind bearing studs.

.5 Align adjacent or abutting members in the same plane to within ± 0.5 mm maximum.

.6 Spacing of studs shall not be more than ±3 mm from the design spacing. The cumulative error in spacing shall not exceed the requirements of the finishing materials.

.7 Align web cut-outs in studs and joists as required for the installation of through-the-knockout style bridging and services.

.8 Make all field measurements necessary to insure the proper fit of all members.

.9 Cutting of members may be by saw or shear. Torch cutting is not permitted.

.10 Reinforce cut-outs where the distance from the centreline of the cut-out to the end of the member is less than 300 mm. Submit the reinforcing detail to the Consultant for approval

.11 All axially loaded members shall be aligned vertically to allow for full transfer of the loads down to the foundation. Vertical alignment shall be maintained at roof/wall and floor/wall intersections.

.12 Complete bearing shall be maintained under tracks to provide for load transfer in axially loaded assemblies. Any discrepancy shall be brought to the attention of the Consultant.

.13 Holes that are field cut into Structural Metal Stud Framing members shall conform to the requirements specified in the Article above.

.14 Replace members with localized damage.

.15 Unless a closer spacing is shown on the shop drawings, anchor top and bottom tracks securely to structure at 800 mm o.c. maximum. Place one additional anchor within 100mm of the end of each piece of track, and additionally as required by the shop drawings.

.16 Install additional studs at abutting walls, openings, terminations against other materials and on each side at corners unless explicitly detailed otherwise on the shop drawings.

.17 Splicing of axial load bearing members is not permitted.

.18 Insulation equal to that specified shall be placed in all jamb and header assemblies that will be inaccessible after their installation into the wall. Insure that insulation is kept dry and not compressed.

.19 Handling and lifting of prefabricated panels shall not cause permanent distortion to any member or collateral material.

3.5 **SHEATHING**

.1 Install sheathing in accordance with manufacturer's instructions and applicable instructions in ASTM C1280.

.2 Use maximum lengths possible to minimize number of joints.

.3 Attach sheathing to metal framing with screws spaced 200 mm o.c. at perimeter where there are framing supports and 200 mm o.c. along intermediate framing in field.

.4 Drive fasteners to bear tight against and flush with surface of sheathing. Do not countersink.

.5 Locate fasteners minimum 10 mm from edges and ends of sheathing panels.

3.6 **INSPECTION**

.1 The Structural Metal Stud Framing design engineer, responsible for the production of the shop drawings, shall provide periodic field review during construction and shall submit reports. These field reviews shall include review of mill tests reports, welded and screwed connections, connections to the main structure, member sizes, location and material thickness, coating thickness, erection tolerances, and all field cutting.

.2 The cost of this field review shall be paid for by the Contractor.

.3 Additional inspection and testing of materials and workmanship shall be carried out by a qualified Third-party Inspection and Testing Agency hired by the Contractor.

.4 The cost of this additional inspection shall be paid for out of the Cash Allowances for Inspection and Testing except that any testing or inspection required by the Consultant because of an error by the Contractor or due to departure from the contract documents by the Contractor, shall be paid for by the Contractor.

.5 Inspection shall include:

.1 Checking that mill test reports are properly correlated to materials.

.2 Sampling fabrication and erection procedures for general conformity to the requirements of the specification.

.3 Checking that the welding conforms to the requirements of Article 3.3.

.4 Checking fabricated members against specified member geometries.

.5 Visual inspection of all welded connections including sample checking of joint preparation and fit-up.

.6 Sample checking of screwed and bolted joints.

.7 Sample checking that tolerances are not exceeded during fit-up or erection.

.8 Additional inspection and testing of welded connections as required by CSA W59.

.9 General inspection of field cutting and alterations required by other Sections.

.6 Submission of reports to the Consultant, the Contractor and the authorities having jurisdiction covering the work inspected with details of deficiencies discovered.

.7 The Contractor shall provide the necessary co-operation and access to insure that the inspection can proceed.

.8 The inspection provided in this section does not relieve the Contractor of his responsibility for the performance of the contract. The Contractor is solely responsible for quality control and he shall implement his own supervisory and quality control procedures.

.9 The Contract cannot rely on timely discovery and reporting of defective work. Materials or workmanship not conforming to the requirements of the Contract may be rejected at any time during the progress of work at no cost to the Owner even if the Contractor has to destroy and rebuild other work as a result.

END OF SECTION

PART - 1 GENERAL

1.1 SUMMARY

.1 Section Includes:

.1 Labour, Products, equipment and services necessary to complete the work of this Section.

1.2 REFERENCES

.1 ASTM A53: Pipe, Steel, Black and Hot-Dipped, Zinc-Coated Welded and Seamless

.2 ASTM A307: Standard Specifications for Carbon Steel Bolts and Studs, 60,000 psi Tensile Strength

.3 ASTM A325M: High-Strength Bolts for Structural Steel Joints

.4 ASTM A653/A653M: Specification for Steel Sheet, Zinc-Coated (Galvanized) or Zinc-Iron Alloy Coated (Galvannealed) by the Hot-Dip Process

.5 ASTM F436: Hardened Steel Washers (for Use with High Strength Bolts)

.6 CSA-G40.20/G40.21-M: General Requirements for Rolled or Welded Structural Quality Steel/Structural Quality Steel

.7 CAN/CGSB-1.181: Ready Mixed Organic Zinc Rich Coating

.8 CAN/CSA G164-M: Hot Dip Galvanizing of Irregularly Shaped Articles

.9 CAN/CSA-S16.1: Limit States Design of Steel Structures

.10 CSA W47.1: Certification of Companies for Fusion Welding of Steel Structures

.11 CSA W48 Series: Electrodes

.12 CSA W59-M: Welded Steel Construction (Metal Arc Welding)

.13 CSA-W117.2: Safety in Welding, Cutting and Allied Processes

.14 CGSB 85-GP-16M: Painting Galvanized Steel

.15 CISC/CPMA 2.75: Canadian Institute of Steel Construction/Canadian Paint Manufacturers Association “A Quick-Drying Primer for Use on Structural Steel”

.16 CISC: Canadian Institute of Steel Construction, "Code of Standard Practice"

.17 SSPC: Steel Structures Painting Council, "Steel Structures Painting Manual, Vol. 2

1.3 SUBMITTALS

.1 Shop Drawings

.1 Submit shop drawings for each item showing:

.1 Product and material identification, thicknesses, gauges, finishes.

.2 Dimensions and jointing details.

.3 Cuts and drilled holes.

.4 Anchorage and securement systems.

.5 Interfaces with the work of other Sections.

.2 Where structural or miscellaneous metal shapes and sizes, including shapes and sizes of hangers, bracing and anchors, are indicated on Architectural drawings it is the responsibility of the Metal Fabrications Subcontractor's structural engineer to review these shapes and sizes and confirm that they are adequate to support the loads anticipated. Consult with the Consultant regarding loading allowed by building structure. Subcontractor's structural engineer shall stamp and sign each shop drawing ensuring that the assemblies are provided in accordance with the engineer's design.

.3 Clearly show and describe all items; sections, dimensions, erection details, anchors and fastenings, connection and jointing details.

.4 Clearly indicate any deviation from the specifications or drawings.

.2 Test Reports: Provide certified test reports showing compliance with specified performance characteristics and physical properties.

.3 Product Data: Submit manufacturer's printed product literature, specifications and data sheets.

.4 Samples: Duplicate samples of 300 mm square sheet, 300 mm long members of each finished metal work. Show each combination of mechanical and chemical treatments to be used on alloy. Prepare samples on metal of same alloy and gauge to be used for work. Show typical welds, fasteners, screws, mitres, and anticipated joints for compatible finish.

1.4 **QUALITY ASSURANCE**

.1 Employ a professional structural engineer registered in the province of Place of the Work to review components and supporting systems for the Work of this Section requiring structural performance, to be responsible for determining sizes, joint spacing to allow thermal movement, and loading of components in accordance with applicable codes and regulations, and to consult with the Project structural Consultant regarding loading allowed by building structure.

.2 It is imperative that the Metal Fabrications Subcontractor's structural engineer review and coordinate shop drawings with respective Subcontractors specified to ensure proper interface of Work between both Subcontracts.

.3 Employ welding operators licensed per CSA W47.1 for types of welding required by the Work.

1.5 **PRODUCT DELIVERY, STORAGE AND HANDLING**

.1 Coordinate deliveries to comply with construction schedule and arrange ahead for strategic off-the-ground, covered storage locations. Do not load areas beyond the designed limits.

.2 Handle and store metal materials at job site in a manner to prevent damage to other materials, to existing buildings or property.

.3 Handle components with care, and provide protection for surfaces against marring or other damage. Ship and store members with cardboard or other resilient spacers between surfaces. Use lifting chokers of material which will not damage surface of steel members.

.4 Use strippable coatings or wrappings to protect exposed surfaces of prefinished metal work which does not receive site finishing. Use materials recommended by finishers or manufacturers of metals, to ensure that method is sufficiently protective, easily removed, and harmless to the finish.

.5 Prevent the formation of wet storage stain on galvanized articles by complying with the following measures:

.1 Stack articles or bundle to allow air between the galvanized surfaces during transport from supplier. Load materials in such a manner that continuous drainage could occur.

.2 Raise articles from the ground and separate with strip spacers to provide free access of air to most parts of the surface. Incline in a manner which will allow continuous drainage. Do not lay galvanized steel on cinders, clinkers, wet soil or decaying vegetation.

.3 Handle galvanized articles in such a manner as to avoid any mechanical damage and to prevent distortion.

.6 Tag metal fabrications, including associated anchor bolts, sleeves, and bases, or otherwise mark for ease of identification at project site.

1.6 **COORDINATION**

.1 Supply to other Sections, materials requiring setting and/or building-in in concrete, masonry or other trades. This includes inserts, anchors, frames, sleeves, etc. Verify locations of said materials.

1.7 **PROJECT CONDITIONS**

.1 Field Measurements: Take measurements at the building to assure proper fitting, fabrication, and erection of the work. Check dimensions in the field, whether or not shown, upon which the accurate fitting together and building-in of the metal fabrication work may depend or which affects the proper installation of the work of others.

PART - 2 PRODUCTS

2.1 **MATERIALS**

.1 Metals - General: free from defects which impair strength or durability, or which are visible; new, of best quality and free from rust, waves or buckles, and clean, straight throughout entire length, of sharply defined profiles and true in web and flange.

.2 Steel - General:

.1 Structural Shapes, Plates: New material conforming to CSA-G40.20/G40.21-M, Grade 350W for W and H shapes, and Grade 300W for other shapes, and plates.

.2 Hollow Structural Sections: New material conforming to CSA-G40.20/G40.21-M Grade 350W, Class H.

.3 Steel Pipe: Conforming to ASTM A53, Type "S", bare, Schedule 40, Grade A steel pipe.

.3 Stainless Steel - General

.1 Stainless Steel Shapes: to ASTM A276, Type 304 for interior use; to AISI No. 4 (2B) finish.

.2 Stainless Steel Plate: to ASTM A167, Type 304 for interior use; to AISI No. 4 (2B) finish.

.3 Stainless Steel Sheet: to ASTM A167, Type 304 for interior use; to AISI No. 4 (2B) finish.

.4 Stainless Steel Fasteners: Type 304 or Type 316 to suit.

.4 Galvanizing, steel shapes: CSA G164 Table 1, hot dip galvanized and passivated after fabrication of individual components.

.5 Galvanzing, sheet steel: commercial quality to ASTM A653/A653M, Grade A, with zinc coating designation Z275, minimized spangle, in accordance with CSSBI Technical Bulletin No. 6. Galvanized sheets temper rolled and unpassivated zinc coating where required to receive paint or other applied finish.

.6 Welding Materials: Conforming to CSA W48.1-M and CSA W59-M.

.7 High Strength Bolts with Bolts, Nuts and Washers (for structural connections): Conforming to ASTM A325M with each type and size of bolt and nut sourced from same manufacture and of same lot. Use hot dipped galvanized where used in exterior connections or in unheated areas inside the building.

.1 Bolts: Heavy, hexagon head high strength structural bolts, of standard size, of lengths required for thickness of members joined and for type of connection.

.2 Nuts: Heavy hexagon semi-finished nuts.

.3 Washers: Flat and smooth hardened washers, quenched and tempered per ASTM F436.

.8 Common or Ordinary Bolts and Anchor Bolts (for general applications): Unfinished bolts conforming with ASTM A307, Grade A, with hexagon heads and nuts where exposed in the finish work. Use hot dipped galvanized where used in exterior connections or in unheated areas inside the building.

.1 Common bolts: of lengths required to suit thickness of material being joined, but not projecting more than 6 mm beyond nut, without the use of washers.

.2 Anchor bolts: of lengths noted, but projecting not less than 13 mm beyond nut unless otherwise noted.

.9 Galvanized Primer: Zinc rich conforming to CAN/CGSB-1.181 for new galvanized metal in compliance with CGSB 85-GP-16M. For galvanized fabrications touch-up to remain unpainted in finished work, use W.R. Meadows of Canada Ltd. "Galvafroid" or Kerry Industries "Z.R.C." or Niagara Paint Inc. "PL052898" zinc rich coating.

2.2 **FABRICATION**

.1 Fabricate the work true to dimensions, square, plumb and level. Joints and intersecting members shall be accurately fitted with adequate fastenings.

.2 Finished work shall be free from distortion and defects detrimental to appearance and performance.

.3 Unless otherwise specified, noted or approved, all connections shall be welded.

.4 Where not possible connections shall be bolted or secured in an approved manner. Exposed fastenings shall be countersunk, bolts cut off flush with nuts and made as inconspicuous as possible. Exposed fastenings where approved shall be of the same material, colour and finishes as the base metal on which they occur.

.5 Shop and field connections shall comply with CSA S16.

.6 Connections to structural steel members shall be welded. No bolting or drilling of holes shall be done unless approved in writing by the Consultant.

.7 Fabricate items that are to be built into masonry or concrete and deliver to project site for setting; furnish items complete with bolts, anchors, clips, etc., ready to set. Furnish, completely install and connect other items. Erect items to proper lines and levels, plumb

and true, and in correct relation to adjoining work. Secure parts in a rigid and substantial manner using concealed connections where practicable.

.8 Where necessary to secure work to the structure by means of expansion bolts, cinch anchors, and similar connections, lay out the work and install such connections, install the work and bolt up, unless otherwise noted.

.9 Provide bolts, shims, blocks, nuts, washers, wedging pieces, etc., required for complete installation, unless otherwise noted.

.10 Drill field holes for bolts or rivets. Do not burn holes.

.11 Furnish fitting-up bolts, drift pins, other tools and equipment and do necessary reaming of unfair holes found in field connections. New holes or enlargement of unfair holes by use of cutting torch is cause for rejection of the entire member. Replacement shall be made at Contractor's expense.

.12 Mill joints to a tight, hairline fit; cope or miter corners. Form joints exposed to weather to exclude water.

.13 Remove burrs from all exposed cut edges.

.14 Accurately cut, machine and fit joints so that finished work presents a neat appearance.

.15 Assemble members without twists or open joints.

.16 Drill properly sized holes for connecting the work of other trades where such can be determined prior to fabrication. Where possible, show such holes on shop drawings. Place holes so not to cause an appreciable reduction in strength of member.

.17 Metal members shall be isolated where necessary in an approved manner to prevent corrosion due to metal to metal contact, or contact between masonry and concrete and metal.

2.3 **WELDING**

.1 Execute welding to avoid damage or distortion to the Work. Should there be, in the opinion of Consultant or Inspection and Testing company, doubt as to adequacy of welds, such welds shall be tested for efficiency and any work not meeting specified Standards shall be removed and replaced with new work satisfactory to Consultant. Execute welding in accordance with the following standards:

.1 CSA W48: for Electrodes. If rods are used, only coated rods are allowed.

.2 CSA W59: for design of connections and workmanship.

.3 CAN/CSA-W117.2: for safety.

.2 Welding shall be done by a fabricator fully approved by the Canadian Welding Bureau under the requirements of CSA W47.1.

.3 Thoroughly clean welded joints and expose steel for a sufficient space to perform welding operations. Neatly finish welds. Where exposed to view and finish painted, apply weld continuously and grind to a uniformly smooth finish.

2.4 **GALVANIZING**

.1 Unless otherwise specified galvanize exterior ferrous metals including members exposed to exterior elements when in final location; members embedded on the exterior side of exterior walls; members built into roof construction; members imbedded in concrete; members specified in this Section or noted on Drawings.

.2 Hot-dip galvanize steel, in accordance with CSA G164 coating weight as prescribed for type of article, or ASTM A525M coating weight of 380 g/sq.m. as applicable. Galvanize

after fabrication where possible. Follow recommended precautions to avoid embrittlement of the base metal by overpickling, overheating or during galvanizing.

.3 Perform hot dip galvanizing after fabrication. Straighten shapes and assemblies true to line and plane after galvanizing. Repair damaged galvanized surfaces with galvanize primer in accordance with manufacturer's printed directions.

.4 Where the specification requires that material be zinc-coated it shall be zinc-coated after fabrication and in accordance with CGSB1-GP-181M (or) 1-GP-183M.

.5 Wet Storage Stain: Remove wet storage stain that may have developed in the coating before installation so that premature failure of the coating does not occur. Remove wet storage stain in accordance with galvanizer's recommendations.

.6 Repair of Galvanized Items: Repair coatings damaged by welding, cutting, or during handling, transport or erection using cold galvanizing compound specified, and as follows:

.1 Ensure surface is clean, dry, and free of oil, grease and corrosion.

.2 Power clean surface to near white metal condition, extending into undamaged galvanized coating.

.3 Apply touch up material to a dry film thickness of 0.203 mm (8 mils) minimum. If touched up work is to remain exposed in the finished work, apply a finish coat of aluminum paint to provide a colour blend with the surrounding galvanizing.

.4 Coating shall be continuous, adherent, as smooth and evenly distributed.

PART - 3 EXECUTION

3.1 EXAMINATION

.1 Examine substrate surfaces to receive the work of this Section and ensure that work done as part of the work of other Sections is complete and that there are no conditions which will adversely affect the performance of this work.

.2 Verify the accuracy and alignment of structural framing to which work of this Section is connected.

.3 Do not proceed with work until unsatisfactory conditions have been corrected. Commencement of work implies acceptance of surfaces and conditions.

3.2 ERECTION

.1 Fit joints and intersecting members accurately. Make work in true planes with adequate fastenings. Build and erect work plumb, true, square, straight, level and accurate to sizes detailed, free from distortion or defects detrimental to appearance or performance.

.2 Fit door frames and jambs with temporary steel spreaders to prevent springing frames and jambs out of shape.

.3 Weld as specified herein.

.4 Take adequate care to prevent damage to any material such as weld burns, etc.

.5 Include all cutting and patching of masonry walls where necessary. Obtain Contractor's approval of cut-outs in advance.

.6 Insulate where necessary to prevent electrolysis due to dissimilar metal to metal contact, or metal to masonry and concrete. Use bituminous paint, butyl tape, building paper or other approved means.

.7 Install materials in a good and workmanlike manner, cleaning and grinding all welding laitance and touching up primer where necessary.

3.3 **CONNECTIONS**

.1 Weld or high strength bolt main member connections. Use CISC double angle header connections wherever possible. High strength bolted connections shall be bearing type using 19mm dia. bolts conforming to ASTM A325M. Secondary members may be bolted with machine bolts.

.2 Perform high tensile bolted connections in accordance with CSA-S16.1. Accurately space holes of size 1.6 mm larger than the nominal diameter of the bolt. Install bearing type high tensile bolted connections unless shown otherwise on Drawings. Provide compressor or electrical equipment capable of supplying and maintaining required pressure at the wrench. Make connections without the use of erection bolts, some high tensile bolts will serve that purpose. Prevent nuts on bolts, except high tensile bolts, from becoming loose by burring bolt thread, by welding or by lock washers or lock nuts.

.3 Execute welding as specified under shop welding in Part 2 and as follows:

.1 Provide continuous welds on exterior work to provide proper weathering.

.2 Take necessary safety precautions in accordance with CSA Standards when welding is carried out in cold weather.

3.4 **FIELD TOUCH-UP**

.1 Paint bolt heads, washers, nuts, field welds and previously un-primed items. Touch up shop primer damaged during transit and installation with material to match shop primer or galvanize coating.

.2 Clean off dirt on installed miscellaneous metal surfaces.

3.5 **SCHEDULE OF METAL FABRICATION ITEMS**

.1 General

.1 Provide metal fabrication items specified herein and items not indicated to be supplied under other Sections.

.2 Refer to drawings for details of metal fabrication work and related items not specifically listed in this Section.

.3 Where work is required to be built into work of other Sections supply such members to respective Sections.

.4 Provide anchor bolts and expansion bolts or other means of anchorage required for building into floors, walls and ceilings, where it is necessary to secure metal and wood to concrete, masonry or steel work. Supply anchor bolts, nuts and similar hardware to the respective Sections for fastening.

.2 Steel Sections

.1 Supply and install steel sections which are:

.1 Not shown on structural drawings.

.2 Shown in outline, but not identified on structural drawings.

.3 Not noted on drawings to be supplied by another section.

.4 Not specified to be supplied under another section.

.2 Cutting of these steel sections in the field shall be done under this section and as directed. The cost of field cutting shall be borne by the trades requiring such cutting.

.3 Where sections are required to be built into masonry or concrete, supply such members to respective trades.

.4 This work shall include, without being limited to -

.1 Steel struts to support suspended lead shielding

.2 Steel posts to counters.

.3 Stainless Steel Items

.1 Supply and install stainless steel items indicated on drawings, complete with fastenings and other incidentals required and as detailed. Refer to 'Materials' articles for alloy.

.2 Stainless steel finish: as specified under 'Finishes' article of this section, unless specified otherwise below.

.3 This work shall include, without being limited to:

.1 1.6 mm stainless steel corner guards for plaster walls.

.4 Concealed support elements and framing

.1 Construct concealed support elements and framing from rolled steel sections assembled by welding.

.2 Design work to withstand, within acceptable deflection limitations, their own weight, the weight of the items to be supported, loads imposed by the motion of supported items, where applicable, and all live loads, static and dynamic which might be applied to the supported items in the course of their normal function. Design supports with a safety factor of 3. Design supports further as required to accommodate structural deflection.

.3 Provide accessories, inserts and fixings necessary for attachment of supports to building structure. Drill supports to receive attachment of supported items. Arrange supports to avoid conflicts with pipes, ducts, pre-cast concrete connections, thermal and air/vapour barrier construction, framing provided under other Sections, and such that supports and their fixings are fully concealed from view within the finished work.

.4 Paint all supports unless galvanizing is specified.

.5 Steel Frames for Miscellaneous Openings

.1 Connections: Connect built-up members of frames by means of plug welding. Miter or cope and join members with continuous welding beads.

3.6 **RECONSTRUCTION, ALTERATIONS AND MAKING GOOD**

.1 Do all re-construction, alterations, fitting, patching and making good of the existing building and to join new work to existing.

END OF SECTION

PART - 1 GENERAL

1.1 SUMMARY

.1 Section Includes:

.1 Labour, Products, equipment and services necessary to complete the work of this Section.

.2 Related Requirements

.1 Comply with Conditions of the Contract and Division 01 - General Requirements.

1.2 QUALITY ASSURANCE

.1 Lumber identification: By grade stamp of an agency certified by Canadian Lumber Standards Accreditation Board.

.2 Plywood identification: By grade mark in accordance with applicable CSA standards.

.3 Align and plumb faces of furring and blocking to tolerance of 1:600.

.4 Regulatory requirements: Provide finished wall assemblies flame spread rating of not more than 150 and finished ceiling assemblies flame spread of not more than 25.

1.3 SUBMITTALS

.1 Test reports: Duplicate copies of flame spread classification test reports by independent testing agency to requirements of CAN/ULC S102.

PART - 2 PRODUCTS

2.1 GENERAL

.1 All composite wood and agrifibre products (including core materials) used in the building must not contain added formaldehyde.

.2 Adhesives used to fabricate laminated assemblies used in the building that contain composite wood and agrifibre products must not contain added formaldehyde.

.3 Adhesives used must meet VOC requirements.

2.2 MATERIAL

.1 Lumber: Acceptable to authorities having jurisdiction and unless specified otherwise, softwood, S4S, moisture content 19% or less in accordance with CSA O141 and NLGA Standard Grading Rules for Canadian Lumber, latest edition.

.2 Furring, blocking, nailing strips, grounds, rough bucks, cants, curbs, fascia backing and sleepers: S2S, Standard or better grade.

.3 Douglas fir plywood: CSA O121, standard construction.

.4 Canadian softwood plywood: CSA O151, standard construction.

.5 Poplar plywood: CSA O153, standard construction.

.6 Interior mat-formed wood particleboard: ANSI/NPA A208.1.

.7 Hardboard: CAN/CGSB-11.3.

.8 Nailing discs: Flat caps, minimum 25 mm diameter, galvanized sheet metal formed to prevent dishing. Bell or cup shapes not acceptable.

.9 Nails, spikes and staples: CSA B111.

.10 Bolts: 12.5 mm diameter unless indicated otherwise, complete with nuts and washers.

.11 Galvanizing: CAN/CSA G164, use galvanized fasteners for exterior work, interior highly humid areas, pressure-preservative and fire-retardant treated work.

.12 Fire retardant treated wood: To CAN/ULC S102, flame spread, fuel contributed and smoke developed ratings of 25 or less, pressure treated.

.1 Lumber and plywood: FirePro FRTW by Osmose, or Dricon FRT by Arch Wood Products Inc., or other acceptable equivalents.

.2 Particleboard: Duraflake FR by Weyerhauser, or other acceptable equivalents.

PART - 3 EXECUTION

3.1 INSTALLATION - GENERAL

.1 Install members true to line, levels and elevations.

.2 Construct continuous members from pieces of longest practical length.

.3 Install spanning members with "crown-edge" up.

.4 Install materials so that grade-marks and other defacing marks are not visible or are removed by sanding.

3.2 FURRING AND BLOCKING

.1 Install furring and blocking as required to space-out and support casework, cabinets, wall and ceiling finishes, facings, fascia, soffit, siding and other work as required.

.2 Install furring to support siding applied vertically and where sheathing is not suitable for direct nailing.

3.3 NAILING STRIPS, GROUNDS AND ROUGH BUCKS

.1 Install rough bucks, nailers and linings to rough openings as required to provide backing for frames and other work.

3.4 CANTS, CURBS, FASCIA BACKING

.1 Install wood cants, fascia backing, nailers, curbs and other wood supports as required and secure using galvanized fasteners.

3.5 SLEEPERS

.1 Install sleepers as indicated.

3.6 FASTENERS

.1 Frame, anchor, fasten, tie and brace members to provide necessary strength and rigidity.

.2 Countersink bolts where necessary to provide clearance for other work.

.3 Use nailing disks for soft sheathing as recommended by sheathing manufacturer.

3.7 PRESSURE TREATED WOOD

.1 Use pressure treated wood as follows:

.1 Wood cants, fascia backing, curbs, nailers, sleepers on roof deck.

.2 Wood furring on outside surface of exterior masonry and concrete walls.

.2 Treat wood cut ends in contact with masonry or concrete with wood preservative before setting in place. Apply preservative in accordance with the manufacturer's written instructions.

.3 Apply preservative by dipping, or by brush to completely saturate and maintain wet film on surface for minimum 3 minute soak on lumber and one minute soak on plywood.

3.8 **ELECTRICAL, DATA AND TELEPHONE EQUIPMENT BACKBOARD**

.1 Provide fire retardant treated backboards for mounting electrical equipment as indicated. Use 19 mm thick plywood on 38 mm x 89 mm furring around perimeter and at maximum 300 mm intermediate spacing.

END OF SECTION

PART - 1 GENERAL

1.1 SUMMARY

.1 Section Includes: Labour, Products, equipment and services necessary to complete the work of this Section.

.2 Related Requirements

.1 Comply with Conditions of the Contract and Division 01 - General Requirements.

1.2 REFERENCES

.1 Abbreviations and Acronyms:

.1 AWMAC: Architectural Woodwork Manufacturers Association of Canada; www.awmac.com.

.2 NAAWS: North American Architectural Woodwork Standards – 3.1, 2017, including all errata and supplements, a jointly sponsored by Architectural Woodwork Manufacturers Association of Canada (AWMAC) and the Woodwork Institute (WI).

1.3 DEFINITIONS

.1 Concealed Surfaces: Surfaces not visible after installation.

.2 Exposed Surfaces: Surfaces exposed to view. Surfaces visible when doors and drawers are closed, backs of hinged doors and edges of hinged doors exposed when opened.

.3 Semi-Exposed Surfaces: Surfaces that become visible when drawers and doors are opened.

1.4 SUBMITTALS

.1 Product Data: Manufacturer's specifications, data, and installation instructions for each manufactured product specified, including fire-retardant-treated materials, hardware, accessories and finishing materials and processes.

.1 Include data for fire-retardant treatment from chemical-treatment manufacturer and certification by treating plant that treated materials comply with requirements.

.2 Shop drawings: Show large scale details of construction. Indicate profiles of members, jointing, fastening, strapping, cut-outs for mechanical and electrical services and related items.

.3 Samples: Submit duplicate 150 mm x 150 mm samples of each specified finish and material for review, show colours and details of edging, forming and construction.

.4 Test reports: Duplicate copies of flame spread classification test reports by independent testing agency to requirements of ULC S102.

.5 Maintenance Data and Operating Instructions: Supply 3 copies of detailed instructions for maintaining, preserving and keeping work of this Section clean and give adequate warning of maintenance practices or materials detrimental to the factory finished work.

1.5 **QUALITY ASSURANCE**

.1 Execute the work of this Section by fully equipped, expert craftsmen, highly skilled in millwork fabrication.

.2 Quality of work and materials: Comply with the requirements for Premium Grade in accordance with the NAAWS standards.

.3 Finish matching: Finish for solid wood members shall match wood veneer finish.

.4 Regulatory requirements: Provide finished wall assemblies flame spread rating of not more than 150 and finished ceiling assemblies flame spread of not more than 25, smoke development classification of 100 for walls and 50 for ceilings, listed and labelled by an organization accredited by Standards Council of Canada in conformance with CAN/ULC-S104 and CAN/ULC-S105.

1.6 **DELIVERY, STORAGE AND HANDLING**

.1 Handle all materials and components carefully to prevent damage.

.2 Do not deliver finished Products during rainy or damp weather.

.3 Ensure that Work of this Section is not delivered until building and storage areas are sufficiently dry so that this Work will not be damaged by excessive changes in moisture content.

.4 Comply with Product delivery, storage and handling requirements of the AWMAC Quality Standards.

.5 Protect fire-retardant materials against high humidity and moisture.

.6 Provide dry storage areas. Stack materials with 150 mm clearance off the floor.

.7 Do not deliver and install damaged Products. Replace in accordance with requirements of this Section.

.8 Cover finished surfaces with heavy kraft paper or put in cartons during shipment. Protect installed surfaces by approved means. Do not remove protective covers until immediately prior to final inspection.

1.7 **FIELD CONDITIONS**

.1 Environmental Limitations: Do not deliver or install millwork items until building is enclosed, wet work is complete, and HVAC system is operating and maintaining temperature between 16 and 32 deg. C and relative humidity between 25 and 55 percent during the remainder of the construction period.

.2 Field Measurements: Where millwork items are indicated to fit to other construction, verify dimensions of other construction by field measurements before fabrication, and indicate measurements on Shop Drawings. Coordinate fabrication schedule with construction progress to avoid delaying the Work

.1 Locate concealed framing, blocking, and reinforcements that support millwork items by field measurements before being enclosed, and indicate measurements on Shop Drawings.

1.8 **CO-ORDINATION**

.1 Verify all dimensions on job site prior to shop fabrication and work on site. Alert Consultant immediately where discrepancies occur.

.2 Co-ordinate fabrication, delivery, and installation with other Sections whose work affect work of this Section, including finish hardware, audio/visual, security, mechanical and electrical services.

.3 It shall be the responsibility of this Section to verify the dimensions and installation details for Owner's supplied equipment and furnishings requiring cut-outs, adaptations and interfacing with woodwork items.

PART - 2 PRODUCTS

2.1 **GENERAL**

.1 All composite wood (including core materials) used in the building shall not contain added formaldehyde.

.2 Adhesives used to fabricate laminated assemblies used in the building that contain composite wood and agrifibre products shall not contain added formaldehyde.

.3 Adhesives used must meet VOC requirements.

2.2 **MATERIALS**

.1 Wood members: Clean, seasoned, straight, square and true on all four sides. Comply with minimum size and tolerances of CSA O141. Grade-mark all wood materials. Kiln dry wood materials for interior use to a moisture content of 4% to 8%, and 7% to 10% for exterior use.

.2 Medium Density Fibreboard Core (MDF): to ANSI A208.2, Grade 155, manufactured from 100% recycled materials, without the use of added formaldehyde resins, minimum density of 770 kg/m^3 (48 lb./cu.ft.).

.1 Where indicated on drawings or required by authorities having jurisdiction, provide industrial grade MDF certified to meet Class 1 surface burning characteristics of ASTM E84, CAN/ULC S-102 and UL 723 (maximum flame spread ≤25, maximum smoke development ≤200).

.3 Veneer Core (Plywood): Provide exterior grade, veneer core (plywood) conforming to NAAWS.

.1 Softwood plywood (concealed locations): Canadian Softwood Plywood (CSP) to CSA O151, standard construction, grade as required, of thickness as indicated, as recommended by NAAWS.

.2 Hardwood plywood: CSA O115, Type II (Type I for high humidity conditions), with a non telegraphing grain manufactured with exterior glue meeting requirements of NAAWS. Exposed faces of Good Sequence Matched, selected veneers, and unexposed faces of Sound Grade, So, veneers.

.3 Douglas Fir plywood: CSA O121; Western Softwood Plywood: CSA O151. Exposed two sides shall be Grade S2S, and exposed one side shall be Grade S1S. Consider fitment doors exposed on both sides.

.4 Birch-faced hardwood plywood: CSA O115, Good Sequence Matched, Select White or Select Red.

.4 Particleboard Core: 100% pre-consumer recycled wood fiber particleboard, no added formaldehyde, to ANSI/NPA A208.1, Grade R, minimum density of 720 kg/m^3 (45 lb./cu.ft.), sanded both sides with thickness as recommended by NAAWS for specified applications.

.5 Hardboard: CGSB 11-GP-3, impregnated, pressed wood with a tempering compound and polymerized by baking.

.6 Plastic laminate (PLAM): ANSI/NEMA LD-3, High Pressure, Paper Base, Decorative Laminates. Unless otherwise specified, use the following:

.1 Horizontal postform work: Grade HGP, minimum 1 mm () thick.

.2 Horizontal flat work: Grade HGS, minimum 1.2 mm () thick.

.3 Vertical postform work: Grade VGP, minimum 0.7 mm (thick.

.4 Vertical flat work: Grade VGS minimum 0.7 mm (thick.

.5 Casework Liner (for semi-exposed surfaces): type CLS.

.6 Backing sheet: BK, same thickness as facing sheets, sanded one face and manufactured by the same manufacturer as the facing sheet.

.7 Test for acceptable VOC emissions in accordance with ASTM D2369 and ASTM D2832.

.8 Plastic Laminate Types: Refer to Section 09 06 00 Finishes Schedule for complete list of plastic laminate types, indicating designations, suppliers, textures and finishes.

.7 Melamine board: Melamine resin impregnated paper, thermally fused to particle board or MDF core, furniture finish in solid colour to be selected by Consultant.

.8 Concealed framing: NLGA, S-Dry No. 1 grade Ontario White Pine or Douglas Fir, comply with BCLMA Construction grade.

.9 Sealer: Water-repellant, clear, colourless, penetrating wood preservative, LePage's Wood Preservative by LePage's Ltd., Super Solignum by Solignum Inc., Pentox by Osmose-Pentox Inc., or other acceptable equivalents.

.10 Adhesives: Type I or Type II adhesives in accordance with NAAWS guidelines, and in accordance with manufacturer’s recommendations for the intended purpose; urea-formaldehyde free, and not to exceed maximum VOC limits of SCAQMD Rule 1168, Adhesives and Sealants Applications.

.11 Fire retardant treated wood: Pressure treated, flame spread classification of not more than 25 as tested to ULC S102.

.1 Concealed lumber and plywood framing, blocking, furring, and strapping: FirePro FRTW by Osmose, or Dricon FRT by Arch Wood Products Inc., or other acceptable equivalents.

.2 Medium density fiberboard: Premier MDF by Weyerhaeuser, or other acceptable equivalents.

.12 Fasteners

.1 Nails and staples: to CSA B111.

.2 Concealed fasteners: Non-corrosive screws bolts and clips as required to suit conditions. Provide appropriate expansion anchors for securement to concrete and masonry.

.13 Stainless steel: Type 304, No. 4 brushed finish.

2.3 **SOLID SURFACING**

.1 Solid surfacing: Refer to Section 09 06 00 Finishes Schedule for complete list of solid surfacing types, indicating designations, suppliers, colours, and finishes.

.2 Joint adhesive, solid surfacing: Manufacturer's standard two-part adhesive kit to create inconspicuous, non-porous joints, with a chemical bond.

.3 Panel adhesive, solid surfacing: Manufacturer's standard neoprene-based panel adhesive.

.4 Sealant, solid surfacing: Manufacturer's standard mildew-resistant silicone sealant colour formulated to match sheets.

2.4 **HARDWARE**

.1 Refer to Section 09 06 00 Finishes Schedule for products and manufacturer unless specified otherwise.

.2 Adjustable steel standards and supports: Nickel plated steel, adjustable on 12 mm centres, 255 ZC x 256 by Knape & Vogt or other acceptable equivalents. Standards at 150 mm from top and bottom. One support per 300 mm length of standard.

.3 Secret gate latch: Cast aluminum with natural finish, 989 by Knape & Vogt or 600 by Rockwood or other acceptable equivalents.

.4 Pin hinge: Nickel plated top, intermediate and bottom hinge, 1238 x 5146 by Amerock or 580 x 575 by onward or other acceptable equivalents.

.5 Spring hinge: 170 degree opening, nickel plated steel mounting plate and self-closing hinge with zinc die cast screwed on cup model 91A6500 and 91A6600 and adhesive back plastic door bumpers model TP1950 by Blum Canada Ltd., or other acceptable equivalents.

.6 Silencer: Round vinyl, self-adhered, provide 2 per door.

.7 Magnetic catch: Cast aluminum, 918 by Knape & Vogt or other acceptable equivalents.

.8 Cabinet locks: Tumbler, nickel plated, 987 NP by Knape & Vogt, or other acceptable equivalents. Provide two keys per lock.

.9 Drawer slide: Full extension, side mounting, zinc coated, steel ball bearing, minimum 45 kg. rated, 1429 by Knape & Vogt or other acceptable equivalents.

.10 Wall mounted shelf brackets: rated 1,000 lb per pair of brackets, epoxy coated white, 5 mm thick steel L shaped brackets, 208 Ultimate L- Brackets by Knape & Vogt or other acceptable equivalents.

2.5 **FABRICATION - GENERAL**

.1 As far as practical, shop assemble work for delivery to site ready for installation and in size easily handled and to ensure passage through building openings. Leave ample allowance for fitting and scribing on the job.

.2 Fabricate work square and to the required lines. Recess and conceal fasteners and anchor heads. Fill with matching wood plugs.

.3 Make each unit rigid and self supporting, suitable for individual removal.

.4 Provide wood members free from bruises, blemishes, mineral marks, knots, shake and other defects and select for colour, grain and texture. Machine and hand sand surfaces exposed in the finished work to an even, smooth surface free from defects detrimental to appearance, in accordance with NAAWS standards, Premium Grade.

.5 Finish exposed edges and curves smooth. Keep contrast in colour and grain in adjoining materials to a minimum.

.6 Provide running members in the maximum lengths obtainable. Provide thickness of members in maximum dressed size of standard lumber. Where thickness or width indicated is not available in hardwoods, use glue laminations to obtain sizes required.

.7 Design and fabricate work to allow for expansion and contraction of the materials. Unless otherwise specified, work shall be glued, and blind screwed or nailed. Properly frame material with tight, hairline joints and hold rigidly in place. Use glue blocks where necessary.

.8 Conceal joints and connections wherever possible. Locate prominent joints where directed. Glue and pin mortise and tenon joints. Intermediate joints between supports will not be permitted. Set and fill surface nails. Prevent opening-up of glue lines in the finished work.

.9 Comply with glue manufacturer's recommendations for lumber moisture content, glue shelf life, pot life, working life, mixing, spreading, assembly time, time under pressure and ambient temperature.

.10 Provide exposed and grain of solid members and edges of exposed plywood with matching solid edging at least 6 mm thick.

.11 Seal finish carpentry wood items before they leave the fabricating shop. For surfaces to receive a natural or stain finish ensure that the sealer is compatible with the final finish. Co-operate with Section 09 91 00 Painting and obtain written approval of proposed sealer.

.12 Fit shelf, door, drawer, gable and cabinet edges and other edges with hardwood edging prior to application of laminated plastic edging or subsequent finishing. Refer to drawings for hardwood edging dimensions.

.13 Set nails and screws, apply wood filler to indentations, sand smooth and prepare to receive finish. Clean, ensure surfaces are free of dust.

2.6 **FABRICATION - CABINETS**

.1 Framing: Solid stock framing assembled with machined dovetailed, mortised tennoned or blind dado joints adequately glued and secured with screws.

.2 Countertops: 19 mm nominal thickness plywood, or particleboard. Provide cut-outs for sinks, fitments and services as required.

.3 Gables: 19 mm particle board or plywood. Attach gables to framing with tongue and groove. Reinforce connections with supplementary metal angles. Route gables to receive shelf standards and fixed shelvings. Provide plastic laminate finished wood cleats for closet shelving and coat rod installation.

.4 Backs: minimum 6 mm thick plywood. Conceal joints behind framing, rout backs into end gables.

.5 Bottoms: 19 mm plywood attached to front rails with tongue and groove.

.6 Doors: 19 mm thick particle board.

.7 Drawers: solid wood stock, 19 mm thick fronts, 12 mm backs, 6 mm drawer dividers and 15 mm sides. Fasten sides to fronts with dovetail joints, and grooved joints for backs. Bottoms of minimum 6 mm thick Birch plywood grooved into front and sides and glued. Refer to architectural drawings for type of PLAM finish.

.8 Shelving: 19 mm plywood. Apply plastic laminate to visible edges, except that adjustable shelves shall be edged on front and back, unless noted on architectural drawings as edge banding.

.9 Base: Marine grade plywood, of height equal to base in room, for moisture/wet areas.

2.7 **FABRICATION - PLASTIC LAMINATE FACED WORK**

.1 Factory apply plastic laminate to interiors of all cabinetwork except drawers, but including drawer fronts and shelves, including underside of cabinets.

.2 Edge band doors, drawers, gables and all visible edges of plywood and particle board components with plastic laminate to match faces, strips same width as plywood or particle board.

.3 Apply backing sheet to laminated flatwork. Apply uniform coating of sealer on exposed edges. Provide backing sheet of sufficient thickness to compensate stresses caused by the facing sheet.

.4 Self-edge straight-line-edging with 1.2 mm standard material and radius corners with post-forming material; apply with same adhesive as facing sheet. Chamfer edges uniformly at approximately 20 degrees using machine router.

.5 Locate joints at 2400 mm to 3000 mm o.c. At L-shaped corners mitre plastic laminate, to the outside corner. Accurately fit members together to provide tight and flush butt joints, in true planes. Provide 6 mm blind spline and approved type draw bolts; one draw bolt for widths up to 150 mm at maximum 450 mm centres for widths exceeding 150 mm. Colour-match adjoining units.

.6 Provide cut-outs as required for inserts, fixtures and fittings. Use radiused corners and chamfer edges around cut-outs to avoid chipping laminate.

.7 Post-form laminate work to details indicated. Provide same core and laminate profiles to provide continuous support and bond for the entire surface.

.8 Assemble work, true and square. Arrange adjacent parts of continuous laminate work to match in colour and pattern.

2.8 **FABRICATION – SOLID SURFACING**

.1 Shop fabricate work to greatest extent practical and to sizes and shapes indicated, in accordance with reviewed shop drawings and solid polymer manufacturer requirements.

.2 Form joints between work using manufacturer's joint adhesive. Make joints inconspicuous in appearance and without voids. Mitre L-shaped corners. Attach 50 mm wide reinforcing strip of solid polymer material under each joint or as recommended by the manufacturer.

.3 Cut holes and cutouts for items penetrating the work to templates. Reinforce holes and cutouts to manufacturer’s requirements.

.4 Provide edge details indicated. Rout and finish component edges to a smooth, uniform finish. Rout all cutouts, then sand all edges smooth. Repair or reject defective or inaccurate work.

2.9 **FABRICATION - TRIM**

.1 Trim members shall be of sizes and profiles indicated. Trim members shall be slow-fed work, free from chatter and other machine marks.

.2 Provide trim over 60 mm wide with backs ploughed or kerfed. Mitre all joints. Carefully machine drum-sand exposed flat surfaces. Minimize sanding on the job.

2.10 **FABRICATION - FIRE RETARDANT TREATMENT**

.1 Provide ULC label for treated wood products as received from the pressure treating plant.

.2 Do not expose pressure treated material to dampness between the time the material is treated and the time the finish is applied. Carefully sand surfaces which show surface salt deposits to remove such deposits before finish is applied.

.3 Provide quality of finished work of equal standard to that of untreated material. Provide identification on materials delivered to Project site showing that these Specifications have been complied with, on each large item, and on bundles of small items. Arrange wood members in pressure treating cylinder to avoid sticker marks on best face of members.

.4 Fire retardant varnish: Apply varnish to substrates in strict accordance to manufacturer's instructions. Maintain room temperature and humidity recommended by the varnish manufacturer.

2.11 **FABRICATION - METAL WORK**

.1 Fabricate the work true to dimensions and square. Accurately fit members with hairline joints. Maintain continuous, unbroken profiles during joining and assembly process.

.2 Construct finish work free from distortion and defects detrimental to appearance and performance. Work shall have smooth finished surfaces.

.3 Fabricate metal work complete with all components required for anchoring in a safe and secure manner.

.4 Countersink exposed fastenings, where such are shown on final reviewed shop drawings and make as inconspicuous as possible.

PART - 3 EXECUTION

3.1 **EXAMINATION**

.1 Verify mechanical, electrical, plumbing, HVAC and other building components, affecting work in this Section are in place and ready.

.2 Examine substrates and adjoining construction and conditions under which work will be installed. Do not proceed with installation until unsatisfactory conditions have been corrected.

3.2 **PREPARATION**

.1 Condition woodwork before installation.

.2 Before installing woodwork, examine shop-fabricated work for completion and complete work as required, including removal of packing and backpriming.

.3 Provide blocking, nailers, furring and grounds required for installation of work of this Section, whether or not such blocking and similar items are indicated on drawings. Coordinate installation of supports concealed in partitions and walls with Sections providing the supports.

.4 Coordinate with Sections providing work concealed by this Section.

.5 Co-ordinate with mechanical, plumbing and electrical requirements to provide openings for diffusers, sprinkler heads, receptacles, switches and fixtures.

3.3 **INSTALLATION**

.1 Install work in conformance with the NAAWS standards. Comply with NAAWS standards Premium Grade.

.2 Install in accordance with reviewed shop drawings and manufacturer's instructions.

.3 Set and secure materials and components in place, rigid, straight, level, plumb and square with hairline joints. Scribe neatly to adjoining surfaces; install blocking and fillers required. Secure units using concealed fasteners.

.4 Provide matching scribing closer strips between units and gypsum wallboard or similar surfaces.

.5 Provide heavy duty fixture attachments for wall mounted cabinet work.

.6 Apply sealant between units and adjacent wall and floor surface, around sills, pipes and escutcheon plates and similar areas to seal and finish installation, in accordance with Section 07 92 00.

.7 Make allowances around perimeter where fixed objects pass through or project into carpentry work to permit normal movement without restriction.

.8 Install work rigidly anchored to the building structure. Provide steel post reinforcing and bracing as required at open gable ends, free standing rails and other free standing work.

.9 Cut equipment cutouts using templates provided.

.10 Access panels: coordinate with equipment supplier exact location of access panels.

.11 Touch up cut edges and surfaces with sealer.

.12 Apply water resistant building paper or bituminous coating over wood framing members in contact with cementitious construction.

.13 After installation, adjust operating hardware for proper fit and function.

.14 Protect finished surfaces by approved means. Do not remove until immediately before final inspection.

3.4 **INSTALLATION – SOLID SURFACING**

.1 Install work plumb and level, in accordance with reviewed shop drawings and product installation details.

.2 Adhere solid surfacing tops to support framing with panel adhesives or concealed fasteners.

.3 Form field joints using manufacturer's recommended adhesive, with joints inconspicuous in finished work. Keep components and hands clean when making joints.

.4 Apply sealant at joints to adjacent construction, to requirements of Section 07 92 00.

.5 Keep components and hands clean during installation. Remove adhesives, sealants and other stains.

.6 Protect surfaces from damage until Substantial Performance. Replace damaged work that cannot be repaired to Consultant’s satisfaction.

3.5 **CABINET HARDWARE**

.1 Install hardware to fitments in accordance with manufacturer's requirements and templates. Adjust hardware as and when required to provide smooth operation and ensure clearances are maintained. Repair damage to adjacent surfaces resulting from failure to conform with this requirement.

.2 Provide lubricants required and use in manner to ensure smooth function of hardware consistent with manufacturer's recommendations.

.3 Ensure fastening components are tightened snugly. Do not burr or otherwise mar the edges of surfaces of hardware components.

3.6 **METAL SUPPORTS**

.1 Install metal supports as indicated on drawings.

.2 Drill holes to receive counter-sunk screws.

.3 Thoroughly clean and prime paint. Apply two coats paint to underside of angle projecting from counter in a neutral colour comparable to adjacent wood colour.

3.7 **ADJUSTING AND TOUCH-UPS**

.1 Before completion of work, adjust moving and operating parts to function smoothly and correctly

.2 Touch-up marred finishes, including factory finishes to match adjacent surfaces.

.3 Fill and retouch all nicks, chips and scratches.

.4 Repair damaged and defective woodwork, where possible, to eliminate functional and visual defects; where not possible to repair, replace damaged woodwork items.

.5 Adjust joinery for uniform appearance.

.6 Remove and replace units which are warped, bowed, not properly fitted or finished or otherwise damaged.

3.8 **CLEANING AND PROTECTION**

.1 On completion, remove manufacturer's identification markings and clean plastic laminate surfaces.

.2 Clean work upon completion on exposed and semi-exposed surfaces.

.3 Broom clean the area of operation.

.4 Protect units during construction so that they will be without any evidence of damage or use at time of acceptance, including corner guards at all edges and impact resistant protective facing to all surfaces.

.5 Do not remove labels, packaging, wrapping, and other protective measures for finished installations prior to start of commissioning or otherwise instructed by Consultant.

END OF SECTION

PART - 1 GENERAL

1.1 SUMMARY

.1 Section Includes:

.1 Labour, Products, equipment and services necessary to complete the work of this Section including but not limited to:

.1 Sheet Metal Air/Vapour Barrier.

.2 Related Requirements

.1 Comply with Conditions of the Contract and Division 01 - General Requirements.

1.2 DEFINITIONS

.1 Air/vapour barrier material: A building material that is designed and constructed to provide primary resistance to airflow through air barrier system.

.2 Air/vapour barrier system: The collection of air barrier materials and auxiliary materials applied to substrate, including joints and junctions to abutting construction, to control air movement through the building envelope.

1.3 SUBMITTALS

.1 Submit required submittals in accordance with Division 01.

.2 Product data: Submit manufacturer's printed product literature, specifications and datasheet and include material characteristics, performance criteria, and limitations, installation instructions indicating preparation, installation requirements, and material storage and handling criteria.

.3 Samples: Two 150 mm x 150 mm (6" x 6") samples of air barriers.

1.4 QUALITY ASSURANCE

.1 Installers: Skilled mechanics having minimum five years experience in the work specified and having an understanding of the design principles of air barrier.

.2 Installation: Maintain continuity of air barrier at interface with adjacent construction and at where work of other Sections project through the air barriers. Allow for expansion and contraction and linear movement of these items.

.3 Pre-installation meeting: Before commencing the work of this Section, arrange a site meeting attended by the Contractor, this Section, the Consultant, and the material manufacturers' qualified representative. Discuss surface conditions, application procedures, suitability of materials and alternative recommendations.

.4 Inspection and testing:

.1 Inspection and testing shall be performed by an independent Membrane Air Barrier inspection and testing company appointed and paid by the Owner.

.2 If required by the Membrane Air Barrier Inspector, or by the Consultant, make any cut tests required. After cut tests are made, repair membrane.

.5 Single source responsibility: Materials shall be sourced from one manufacturer including sheet membranes, air barrier sealants, primers, mastics and adhesives.

1.5 SITE CONDITIONS

.1 Low temperature application:

.1 Perform adhesion test for membrane in accordance with membrane manufacturer’s installation instructions.

.2 Do not perform installation during rainy or inclement weather or on wet or frost covered surfaces.

.3 Do not install solvent curing sealants or vapour release adhesive Products in enclosed spaces without ventilation.

.4 Maintain temperature and humidity recommended by the Products manufacturers before, during and after installation.

1.6 **DELIVERY, STORAGE AND HANDLING**

.1 Deliver materials in factory wrapped rolls with labels indicating manufacturer and trade name, material type, thickness, roll width and area.

.2 Protect materials from direct exposure to sunlight and physical damage.

1.7 **COORDINATION**

.1 Coordinate installation of sheet air-vapour barrier with work of other Sections to achieve an air and vapour tight building envelope.

PART - 2 PRODUCTS

2.1 **PERFORMANCE/DESIGN CRITERIA**

.1 Ensure air/vapour membrane system controls air leakage, moisture and thermal transfer while maintaining its structural integrity in accordance with OBC. Ensure air/vapour membrane is continuous and compatible with interfacing materials in plane of air-tightness and sealed at interfaces to provide proper air barrier system in construction. Provide greater attention for air/vapour barrier continuity at physical connections of material components between window frames and wall assembly while taking into consideration construction tolerance, reduction of unnecessary interfaces in system and providing proper structural support to air/vapour barrier connections, such that wind loads, deflection and air pressure differentials do not cause connections to fail.

.2 Air barrier system shall perform as continuous air barrier and as liquid-water drainage plane flashed to discharge to exterior of building envelope incidental condensation or water penetration.

.3 At wall and roof cladding transitions, air barrier system shall perform as continuous air barrier and as liquid-water drainage plane flashed to discharge to exterior of building envelope incidental condensation or water penetration by creation of unobstructed drainage plane that extends across the cladding transition or by flashing to discharge to exterior of building envelope incidental condensation or water penetration.

.4 Air barrier system shall accommodate substrate movement, construction material changes, and transitions at perimeter conditions without deterioration and air leakage exceeding the following specified limits and requirements, or interruption of the drainage plane:

.1 Air permeance of air barrier material: Maximum 0.02 L/s m^2 at 75 Pa (0.004 cfm/ft^2 at 1.57 psf) to ASTM E2178.

.2 Rate of air leakage of air barrier system: Maximum 0.10 L/s m^2 at 75 Pa (0.02 cfm/ft^2 at 1.57 psf) to ASTM E283.

.3 Water vapour transmission for air / vapour barriers: Maximum 15 ng/Pa.m^2.s to ASTM E96/E96M.

.4 Water vapour transmission for vapour permeable air vapour barriers: Minimum 570 ng/Pa.m^2.s. (10 perms) to ASTM E96/E96M.

.5 Pull-off strength of liquid or sheet applied membrane and laps: Cohesive or substrate failure permitted when tested to specified wind load. Air barrier system

shall transfer wind load to structure and shall resist 100% of design wind load or minimum of 2.15 kPa (45 psf), whichever is greater.

.6 Low temperature flexibility: to -30°C (-22°F) to CGSB 37-GP-56M.

.5 Air barrier system shall be joined in an airtight and flexible manner to air barrier material of adjacent building envelope air barrier systems, allowing for relative movement of systems due to thermal and moisture variations and creep.

2.2 **SHEET METAL, AIR/VAPOUR BARRIER**

.1 Sheet metal for metal/air vapour barriers and air seals: Minimum 22 gauge thick, sheet steel galvanized to ASTM A653/A653M, Designation G90/Z275.

.2 Sealant for sealing of metal air/vapour barrier: Single component silicone, to ASTM C920, Type M or S, Grade NS, Class 25.

.3 Dielectric Separator: Best grade, quick drying non-staining alkali resistant bituminous paint to CAN/CGSB 1.108.

.4 Fasteners: Self-tapping, galvanized steel fasteners with neoprene washers.

PART - 3 EXECUTION

3.1 **GENERAL INSTALLATION REQUIREMENTS**

.1 Apply primer continuously as required by manufacturer’s installation instructions.

.2 Surfaces to receive air barrier systems shall be smooth, dry and free from conditions that will adversely affect execution, permanence, or quality of the work of this section.

.3 Air barrier system shall be continuous in the building envelope. Lap and seal air barrier systems in accordance with product manufacturer’s installation instructions to construction, control, and expansion joints, across junctions between different building assemblies, and around penetrations through the building assembly.

.4 Wrap into jamb, head and sill of building envelope window openings, door openings, and other openings with air barrier system membrane by returning membrane to inside face of opening.

.5 Reverse Laps shall be protected by termination seal. Terminations to adjacent assemblies to be protected by termination seals.

3.2 **INSTALLATION – SHEET METAL AIR /VAPOUR BARRIER**

.1 Apply sheet metal in an overlapping shingle fashion, staggering vertical joints. Form 10 mm (3/8") x 45 degree lips at lap joints and terminations and fill with sealant.

.2 Overlap sides and ends of sheet a minimum of 50 mm (2").

.3 Mechanically fasten sheet metal to supports at 200 mm (8") on centre.

.4 Ensure all projections, including wall ties, are properly sealed by using liquid applied air barrier membrane.

.5 Air barrier membrane to be complete and continuous from the wall to the roofing membrane system and waterproofing membrane system, around windows, aluminum screens, hollow metal door frames and spandrel panels.

3.3 **FFIELD QUALITY CONTROL**

.1 A site representative qualified and trained by membrane manufacturer to inspect substrate conditions, surface preparation, membrane application, flashings, protection, and to furnish reports to Consultant. Provide minimum (3) three reports unless additional reports are deemed necessary by Consultant or Inspector.

.2 If test results or inspections show membrane does not comply with requirements, remove and replace or repair the membrane as recommended in writing by manufacturer, and make further repairs after retesting and inspecting until membrane installation passes.

END OF SECTION

PART - 1 GENERAL

1.1 SUMMARY

.1 Section Includes: Labour, products, equipment and services necessary to complete the work of this Section.

1.2 QUALITY ASSURANCE

.1 Qualifications: Work of this Section shall be installed by a company that is a member of the Canadian Roofing Contractors Association and who has a minimum of 5 years experience in successful roofing metal flashings on projects of comparable scope. If requested by the Consultant, submit evidence of experience in this type of Work.

.2 Pre-installation meeting: Prior to commencing work of this Section, arrange for manufacturer's technical representative to visit the site and review procedures to be adopted, conditions under which the work will be done, and inspect the surfaces to receive the work of this Section. Advise the Consultant of the date and time of the meeting.

1.3 SUBMITTALS

.1 Submit detailed shop drawings showing proposed method of shaping, forming, jointing, fastening, and application of sheet metal work. Submit lists of materials to be used.

.2 Samples: Submit representative sample section of prepainted metal flashing illustrating "S" lock jointing, minimum 600 mm long. Submit sample well in advance of material fabrication.

1.4 DELIVERY, STORAGE AND HANDLING

.1 Protect the work of this Section from damage. Replace damaged work which cannot be satisfactorily repaired, restored or cleaned, at no cost to the Owner.

1.5 WARRANTY

.1 Submit a standard CRCA written warranty for the Work of this Section stating that the metal flashing Work is warranted against leakage or latent defects for 2 years from the date of Substantial Performance of the Work.

.2 Warranty shall provide for removal of Products which fail to meet specified criteria, replacement with new Products conforming to specifications, and restoration of Work damaged by removal and replacement including labour and installation costs.

PART - 2 PRODUCTS

2.1 MATERIALS

.1 Prepainted Sheet Steel: 0.607 mm minimum thickness, commercial quality to ASTM A653/A653M, with Z275 zinc coating designation, prepainted with Stelcolour or Dofasco 10000 series proven paint system, in colour selected by Consultant.

.2 Sheet Steel: 0.607 mm minimum thickness, commercial quality to ASTM A653/A653M, with Z275 zinc coating designation.

.3 Starter Strips: Furnish a continuous run of starter strips of Z275 galvanized sheet metal, 0.91 mm thick, of height shown on Drawings, with metal flashing interlocked at the starter strip.

.4 Banding strip: Hot dipped galvanized sheet steel, 3 mm core nominal thickness, Z275 coating designation to ASTM A525M, 25 mm wide.

.5 Isolation coating: Alkali resistant bituminous paint.

.6 Sealant: 1 part polyurethane, Sika “RC-1”, Tremco “Dymonic”, or Sonneborn "NP-1”, conforming to ASTM C920, Type S, Grade NS, Class 25.

.7 Fasteners: Conforming to CSA B111 of same material as sheet metal secured, of type, length and size suitable for the particular conditions. Where exposed fasteners are permitted, use colour matched nylon heads with cupped neoprene washers.

.8 Touch-up paint: as recommended by the prefinished sheet metal manufacturer.

.9 Membrane underlayment: Composite peel and stick membrane comprised of rubberized or modified asphalt and polyethylene, Perm-A-Barrier by W. R. Grace & Co. of Canada Ltd., Blueskin SA by Bakor Inc. or other approved equivalent. Complete with compatible primer and sealant.

2.2 SHEET METAL FABRICATION

.1 Fabricate cap flashings, counter flashings, closures, starter strips, and other miscellaneous sheet metal work with prefinished sheet metal in general accordance with applicable CRCA FL series specifications and as indicated.

.2 Use competent mechanics and work accurately to details indicated.

.3 Fabricate cap flashings, starter strips, and base counter flashings less than 300 mm in height in 2400 mm maximum lengths. Form counter flashings between 300 mm and 600 mm in height in 1200 mm maximum lengths.

.4 Provide a counter flashing and an intermediate vertical flashing where the cap flashing is greater than 600 mm above the top of the roofing membrane. Form vertical flashings in 1200 mm maximum lengths.

.5 Provide an S-Lock joint at all end joints and at all horizontal joints between the cap flashing and the vertical flashing and between the vertical flashing and base counter flashing.

.6 Mitre and form standing seams at all corners. Make allowance for movement at joints.

.7 Hem all exposed edges at least 13 mm for appearance and stiffness.

.8 Form sections square, true, and accurate to size, free from distortion, oil canning and other defects detrimental to appearance or performance.

.9 Apply isolation coating to metal surfaces to be embedded in concrete or mortar joints.

PART - 3 EXECUTION

3.1 INSTALLATION

.1 Install cap flashings, counter flashings, starter strips, and other miscellaneous sheet metal work in general accordance with applicable CRCA FL series and as detailed.

.2 Ensure parapet cap flashings are installed with a minimum positive slope of 5% toward the roof area.

.3 Do not use exposed fasteners unless approved before installation or where shown on Drawings.

.4 Provide membrane underlayment beneath sheet metal flashings at all locations, except where membrane flashings are present.

.5 Provide continuous starter strips where indicated or required to present a true, non-waving, leading edge. Fasten starter strips to substrate at a minimum of 300 mm on centre.

.6 Provide continuous banding strips along top of membrane flashings where indicated on Drawings and at locations and where membrane flashings terminate at the base of a wall and no other means of mechanical securement is specified or indicated. Fasten banding strips to substrate at a minimum of 150 mm on centre.

.7 End joints where adjacent lengths of metal flashing meet shall be made using an “S-lock” joint. Execute by inserting the end of 1 coping length in a 25 mm deep “S” lock formed in the end of adjacent length. Extend concealed portion of the “S” lock 25 mm outwards and nail to substrate prior to installation of subsequent sheets. Face nailing of joints will not be permitted.

.8 Insert top edge of sheet metal flashing under cap flashings to form weather tight junctions. Turn top edge of flashings into recessed reglets or mortar joints a minimum of 25 mm. Fasten sheet metal flashing into reglet joint at a minimum spacing of 460 mm.

.9 Ensure fasteners are located a minimum of 300 mm above the surface of the roofing membrane, unless other wise indicated on Drawings.

.10 Tie-in sheet metal flashings to sheet metal flashings associated with metal roofing and ensure weathertight connections.

.11 Exposed fastenings will not be permitted on horizontal work exposed to view from the building exterior.

.12 Install starter strips where indicated or required to present a true, non-waving, leading edge. Anchor to back-up to provide rigid, secure installation.

.13 Prepare and touch up scratches on prepainted material with air drying formulation of the coil coating paint. Replace material at no cost to Owner, if touching up is unacceptable to the Consultant.

3.2 **MEMBRANE UNDERLAYMENT**

.1 Install membrane underlayment under sheet metal flashings as per manufacturer's printed instructions.

.2 Ensure all surface areas are free from frost, dust, grease, oil, loose or spalled material.

.3 Apply primer as per manufacturer's printed instructions. Allow the primer to dry and install air barrier membrane on the same day as priming.

.4 Proceed only when weather is favourable. Should installation be undertaken at temperature below 4°C, consult manufacturer regarding special procedures.

.5 Maintain the recommended minimum sidelap and endlap in accordance with the manufacturer's printed instructions.

.6 Roll the membrane underlayment immediately after placement to ensure continuous adhesion. The roller to be of the type and size recommended by the manufacturer.

.7 Ensure the continuity of the membrane underlayment is maintained at all penetrations and terminations. Apply membrane sealant as required to fill inaccessible gaps following the manufacturer's instructions.

.8 Do not cover the membrane underlayment until it is reviewed and approved by the Consultant.

3.3 **SEALANT**

.1 Apply sealant where required to form weathertight seal between flashing and adjoining surface and between flashing and other work of this Section. Sealant work consists of bedding between members where possible and with neatly formed sealant bead where exposed.

END OF SECTION

PART - 1 GENERAL

1.1 SUMMARY

.1 Section Includes:

.1 Labour, Products, equipment and services necessary to complete the work of this Section.

.2 Related Requirements

.1 Comply with Conditions of the Contract and Division 01 - General Requirements.

1.2 REFERENCES

.1 American Society for Testing and Materials (ASTM):

.1 ASTM E2174, Standard Practice for On-Site Inspection of Installed Fire Stops

.2 Underwriters' Laboratories of Canada (UL Canada):

.1 CAN/ULC-S102, Method of Test for Surface Burning Characteristics of Building Materials and Assemblies.

.2 CAN/ULC-S104, Standard Method for Fire Tests of Door Assemblies

.3 CAN/ULC-S105, Standard Specification for Fire Door Frames Meeting the Performance Required by CAN/ULC-S104.

.4 CAN/ULC-S115, Standard Method of Fire Test of Firestop Systems.

1.3 REQUIREMENTS OF REGULATORY AGENCIES

.1 Fire rated assemblies: Labelled and listed by a nationally recognized testing agency having factory inspection service in conformance with CAN/ULC-S104 and CAN/ULC-S105 for ratings indicated.

1.4 SYSTEM DESCRIPTION

.1 Work of this Section is inclusive of all firestopping specified herein and indicated on Drawings except for firestopping and smoke seal within mechanical assemblies (i.e. inside ducts, dampers, intumenscent pipe sleeves) and electrical assemblies (i.e. inside bus ducts) shall be provided as part of work of the Mechanical and Electrical Divisions respectively. Firestopping and smoke seals around outside of such mechanical and electrical assemblies, where they penetrate fire rated separations, shall be part of work of this Section.

.2 Fire stopping materials and/or systems intended to act as firestop and smoke seal for any through-penetrating items, termination devices, receptacles or any cut-out openings or joints, including openings and spaces at perimeter edge conditions, with wall and floor assemblies having fire-resistance rating.

.3 Fire stop and seal (draft-tight) gaps, expansion joints and penetrations in fire separations and fire walls against passage of fire, smoke, gasses, fire fighter's hose stream and, where designated, passage of liquids. Smoke seal at angle support at fire dampers.

.4 Materials and systems capable of providing effective barrier against passage of fire, smoke, gasses, and where specifically indicated passage of liquids.

.5 Ensure firestopping system provides fire-resistance rating (flame and temperature) not less than fire resistance rating of surrounding floor, wall or assembly, in accordance with requirements of OBC.

.6 Firestop system rating: Comply with F, FH, FT, or FTH ratings as required by authorities having jurisdiction.

.7 Firestopping seals except for wall joints in visible areas must be of easily identifiable colour, such as red or yellow to be clearly distinguished from other building materials.

.8 Supply asbestos-free and PCB-free materials and systems tested in accordance with CAN/ULC S115, be ULC listed, or be acceptable by authorities having jurisdiction.

.9 Ensure suitability of products for application and compatibility of materials with surfaces to which it will be applied.

.10 Site system assembly shall be in accordance with ULC listed system design limitations, unless proposed assembly is approved by authorities having jurisdiction and meets Consultant's approval.

.1 Technical submissions that propose deviations from a listed assembly must be prepared, stamped and signed by a Professional Engineer, licensed to practice in the Province of Ontario.

1.5 **QUALITY ASSURANCE**

.1 Provide work of this Section using competent installers experienced, trained and approved by material or system manufacturer for application of materials and systems being used. Installers shall have minimum 5 years experience in installation of firestopping materials as systems for multiple trade projects.

.1 Approved applicators of fireproofing materials shall select, with manufacturer’s recommendations, ULC rated assembly to achieve the required fire resistance rating.

.2 Work of this Section shall be by one Sub-Contractor responsible for firestopping materials and systems for all of the Work except as outlined above.

.3 Pre-installation meeting: Prior to commencing work of this Section, arrange for manufacturer's technical representative to visit the site and review procedures to be adopted, conditions under which the work will be done, and inspect the surfaces to receive the work of this Section. Advise the Consultant of the date and time of the meeting.

.4 Manufacturer’s site inspection: Have the manufacturer’s technical representative inspect the work at suitable intervals during application and at conclusion of the work of this Section, to ensure the work is correctly installed. When requested, submit manufacturer’s inspection reports and verification that the work of this Section is correctly installed.

.5 Request inspection by Consultant of completed systems before they are covered.

1.6 **COORDINATION**

.1 Coordinate with Sections involved (and advise dates) where work will take place throughout various areas of Work.

1.7 **DELIVERY, STORAGE AND HANDLING**

.1 Deliver materials to Site in manufacturer's sealed and labelled containers. Materials shall be subject to Consultant's inspection.

.2 Store materials inside building for 24 hours prior to use; store in area designated by Consultant; protect from damage and environmental conditions detrimental to material.

1.8 **ENVIRONMENTAL CONDITIONS**

.1 Maintain minimum temperature of 40 deg F for minimum period of 1 week before application, during application and until application is fully cured.

.2 Conform to manufacturer's recommended temperatures, relative humidity and substrate moisture content for storage, mixing, application and curing of firestopping materials.

.3 Ventilate areas in which firestopping is being applied. Protect water-soluble material from wetting until fully cured.

1.9 **SUBMITTALS**

.1 Shop Drawings: Submit complete and detailed shop for each condition encountered on Site. Indicate following:

.1 ULC assembly number certification, unless proposed assembly is approved by authorities having jurisdiction and meets Consultant's approval

.2 Required temperature rise and flame rating

.3 Hose stream rating (where applicable)

.4 Thickness

.5 Proposed installation methods

.6 Material of firestopping and smoke seals, primers, reinforcements, damming materials, reinforcements and anchorages/fastenings

.7 Size of opening

.8 Adjacent materials

.9 Number of penetrations

.10 Location of penetrations

.2 Product Data: Submit up-to-date manufacturer's product data proposed for use under this Section. Include manufacture printed instructions for installation.

.3 Samples: If requested, submit samples of each type of firestopping systems, smoke seals and accessories. Indicate location where material/system shall be used

.4 Certification: Submit current ULC listings and certified copies of test reports and/or smoke seals indicating that firestopping material/systems conforms to or exceeds specified requirements.

1.10 **WARRANTY**

.1 Warrant work of this Section against defects and deficiencies for period of 5 years commencing at the date of Substantial Performance. Promptly correct any defects or deficiencies which become apparent within warranty period, to satisfaction of Consultant and at no additional cost to Owner. Defects shall include but shall not be limited to cracking, breakdown of bond, failure to stay in place or bleeding.

PART - 2 PRODUCTS

2.1 **MATERIALS**

.1 Primer: As recommended by firestopping material manufacturer for specific substrate and use.

.2 Damming and backup materials, support and anchoring devices: Non-combustible, in accordance with tested assembly and as recommended by manufacturer. Combustible material for damming purpose may be permitted only if they are removed after permanent firestop materials are cured. Sheet steel covers over temporarily unused sleeves shall be minimum 0.8 mm (1/32") thick galvanized steel sheet.

.3 Pipe and duct insulation and wrappings: Compatible with firestopping material; as recommended by manufacturer.

.4 Fire stopping and smoke seals at opening intended for ease of re-entry such as cable: Elastomeric seal. Do not use cementitious or rigid seal at such locations.

.5 Fire stopping and smoke seals at opening around penetrations for ductwork and other mechanical items requiring sound and vibration control: Elastomeric seal. Do not use cementitious or rigid seal at such locations.

.6 Sealants at vertical surfaces: Non-sagging.

.7 Sealants on floor surfaces requiring level finish: Self-levelling.

.8 Firestop insulation / packing material: Intertek certified mineral wool batt insulation, pre-formed, semi-rigid, non-combustible, minimum 64 kg/m^3 (4 lbs/ft^3) density.

PART - 3 EXECUTION

3.1 PREPARATION

.1 Remove combustible material and loose material detrimental to bond from edges of penetration. Clean, prime or otherwise prepare substrate material to manufacturer's recommendation.

.2 Do not apply firestop material to surfaces previously painted or treated with sealer, curing compound, water repellent or other coatings unless tests have been performed to ensure compatibility of materials. Remove coatings as required.

.3 Verify openings, dimensions and surfaces conform to fire and smoke seal assembly.

.4 Comply with manufacturer's recommended requirements for temperature, relative humidity, moisture content and presence of any sealer or release agents on substrate during application and curing of materials. Surfaces shall be dry, dust and frost free.

.5 Fully protect walls, windows, floors and other surfaces around areas to be firestopped from marring or damage.

.6 Prime surfaces in accordance with manufacturer's directions. Mask where necessary to avoid spillage on to adjoining surfaces. Remove stains on adjacent surfaces as required.

.7 Remove insulation from area of insulated pipe and duct where such pipes or ducts penetrate fire separation unless ULC certified assembly permits such insulation to remain within assembly.

.8 Provide temporary forming, packing and bracing materials necessary to contain firestopping. Upon completion, remove forming and damming materials not required to remain as part of system.

.9 Install damming and firestopping materials as per manufacturer's instructions.

.10 Mix materials at correct temperature and in strict accordance with manufacturer's directions.

3.2 INSTALLATION

.1 Seal penetrations through and gaps in fire rated separations. Fill gap in accordance with ULC details for tested system selected.

.2 Apply firestopping materials in strict accordance with manufacturer's written instructions and tested designs to provide required temperature and flame rated seal. Apply with sufficient pressure to properly fill and seal openings to ensure continuity and integrity of fire separation. Tool or trowel exposed surfaces as required.

.3 Remove excess compound promptly as work progresses and upon completion.

.4 Examine sizes, anticipated movement and conditions of opening and penetration to establish correct system and depth of backup materials and of firestopping material required. Use firestopping and smoke seals best suited for specific application as required, indicated or specified. Use only components specified in fire test of system. Do not eliminate any component for firestop system that was present in fire tests.

.5 Do not cover materials until full cure has taken place.

.6 Provide firestop systems at following locations, without being limited to:

.1 At openings, voids and penetrations through floor slabs except openings within shafts constructed with a fire resistance rating and slabs on granular fill.

.2 At openings, voids and penetrations through fire rated masonry, concrete and gypsum board walls, partitions and shaft walls.

.3 At openings, voids and penetrations installed for future use through fire rated masonry, concrete and gypsum board walls, partitions and shaft walls.

.4 Around mechanical and electrical assemblies penetrating fire assemblies.

.5 Between perimeter of floor and roof slabs and exterior wall construction, and cladding systems.

.6 Between tops of fire rated walls and partitions and underside of floor or roof slabs.

.7 At all expansion joints in walls, floors and assemblies as detailed

.7 Refer to all other sections of Specifications and the Drawings to ascertain where firestops are to be used and, if noted, type of firestop required.

.8 Cure materials in accordance with manufacturer's directions.

3.3 **CLEANING**

.1 Remove excess materials and debris and clean adjacent surfaces immediately after application to satisfaction of Consultant. Remove and/or correct staining and discolouring of adjacent surfaces as directed.

.2 Remove temporary combustible damming materials after initial set of firestopping materials. Such dams may be required to remain in place if flame spread rating is below 25, in accordance with CAN/ULC-S102.

END OF SECTION

PART - 1 GENERAL

1.1 SUMMARY

.1 Section Includes:

.1 Labour, Products, equipment and services necessary to complete the work of this Section for joint sealants as indicated on drawings and as required.

.2 This Section specifies sealing work not specified in other Sections. Refer to other Sections for other sealants.

.2 Related Requirements:

.1 Comply with Conditions of the Contract and Division 01 - General Requirements.

1.2 REFERNCES

.1 American Society for Testing and Materials (ASTM)

.1 ASTM C719, Standard Test Method for Adhesion and Cohesion of Elastomeric Joint Sealants Under Cyclic Movement (Hockman Cycle)

.2 ASTM C834, Standard Specification for Latex Sealants

.3 ASTM C920, Standard Specification for Elastomeric Joint Sealants

.4 ASTM C1248, Standard Test Method for Staining of Porous Substrate by Joint Sealants

.5 ASTM E90, Standard Test Method for Laboratory Measurement of Airborne Sound Transmission Loss of Building Partitions and Elements

1.3 ACTION SUBMITTALS

.1 Product Data: Submit to Consultant Product information from sealant manufacturer prior to commencement of work of this Section verifying:

.1 Selected sealant materials are from those specified.

.2 Composition and physical characteristics.

.3 Surface preparation requirements.

.4 Priming and application procedures.

.5 Suitability of sealants for purposes intended and joint design.

.6 Test report on adhesion, compatibility and staining effect on samples of adjacent materials used on Project.

.7 Sealants compatibility and adhesion with other materials and Products with which they come in contact including but not limited to sealants provided under other Sections, insulation adhesives, bitumens, membranes, stone, concrete, masonry, metals and metal finishes, ceramic tile, plastic laminates and paints.

.8 Suitability of sealants for temperature and humidity conditions at time of application

.2 Samples: Submit duplicate samples of each type of material and colour. Submit samples of primer, bond breaker tape and joint backing material, if requested.

1.4 INFORMATION SUBMITTALS

.1 Product Certificates: For each kind of joint sealant and accessory, from manufacturer.

.2 Manufacturer's Instructions: submit manufacturer's installation instructions and special handling criteria, installation sequence, cleaning procedures.

1.5 **ADMINISTRATIVE REQUIREMENTS**

.1 Pre-installation meeting:

.1 Two (2) weeks prior to commencing work of this Section, arrange for manufacturer's technical representative to visit the site and review with installer preparatory and installation procedures to be followed, conditions under which the work will be done, and inspect the surfaces to receive the work of this Section.

.2 Establish a procedure to maintain optimum working conditions and to coordinate this work with related and adjacent work.

.3 Advise the Consultant of the date and time of the meeting.

1.6 **QUALITY ASSURANCE**

.1 Applicators: Recognized and established sealant applicators with at least five years experience and having skilled mechanics thoroughly trained and competent in the use of sealant equipment and the specified materials.

.2 Single source responsibility: Use sealants from single manufacturer for each different product required to ensure compatibility.

.3 Pre-installation compatibility and adhesion testing: Provide sealant manufacturer samples of actual materials that will contact or affect their sealants in the Work for compatibility and adhesion testing. This testing will not be required where sealant manufacturer is able to furnish data acceptable to Consultant based on previous testing for adhesion and compatibility to materials matching those of the Work.

.4 Pre-installation field adhesion testing:

.1 Conduct site field-tests for adhesion of sealants to actual joint substrates using proposed preparation methods and materials recommended by manufacturer.

.2 Conduct tests for each type of sealant and substrate.

.3 Locate field-test joints where inconspicuous or as directed by Consultant. Include areas typical of those requiring removal of existing sealants and utilize methods proposed for sealant removal.

.4 Test method: Use manufacturer's standard field adhesion test methods and methods proposed for joint preparation to verify proper priming and joint preparation techniques required to obtain optimum adhesion of joint sealants to joint substrate.

.5 Evaluate and report results of field adhesion testing.

.6 Do not use joint preparation methods or sealants that produce less than satisfactory adhesion to joint substrates during testing.

.5 Standard of acceptance: Retain at least one 1500 mm long acceptable joint for each type of sealant and substrate installed during pre-installation field adhesion testing as standard of acceptability for the Work. Acceptable joints may form part of the Work.

.6 Mockups: Install sealant in mockups of assemblies specified in other Sections that are indicated to receive joint sealants specified in this Section. Use materials and installation methods specified in this Section.

1.7 **DELIVERY, STORAGE, AND HANDLING**

.1 Deliver and store materials in original wrappings and containers with manufacturer's seals and labels, intact. Protect from freezing, moisture and water.

1.8 **PROJECT CONDITIONS**

.1 Do not proceed with installation of joint sealants under the following conditions:

.1 When ambient and substrate temperature conditions are outside limits permitted by joint-sealant manufacturer, or are below 5 deg C (40 deg F).

.2 When joint substrates are wet.

.3 Where joint widths are less than those allowed by joint-sealant manufacturer for applications indicated.

.4 Where contaminants capable of interfering with adhesion have not yet been removed from joint substrates.

PART - 2 PRODUCTS

2.1 **MATERIALS - GENERAL**

.1 Provide exterior and interior joint sealants establishing and maintaining water tight, water resistant and air tight continuous joint seals without staining or deteriorating joint substrates.

.2 Ensure joint sealants comply with specified type, grade, class and uses.

.3 Compatibility: Provide joint sealants, backings, and other related materials that are compatible with one another and with joint substrates under conditions of service and application, as demonstrated by joint-sealant manufacturer, based on testing and field experience.

.4 Provide Products with capability, when tested, for adhesion and cohesion under maximum cyclic movement in accordance with ASTM C719, to withstand required percentage change in joint width existing at time of installation and remain in compliance with other requirements of ASTM C920 for uses indicated.

.5 VOC Content of Interior Sealants: Sealants and sealant primers used inside the weatherproofing system shall comply with the following limits for VOC content when calculated according to 40 CFR 59, Subpart D (EPA Method 24):

.1 Architectural Sealants: 250 g/L.

.2 Sealant Primers for Nonporous Substrates: 250 g/L.

.3 Sealant Primers for Porous Substrates: 775 g/L.

.6 Low-Emitting Interior Sealants: Sealants and sealant primers used inside the weatherproofing system shall comply with the testing and product requirements of the California Department of Health Services' "Standard Practice for the Testing of Volatile Organic Emissions from Various Sources Using Small-Scale Environmental Chambers."

.7 Liquid-Applied Joint Sealants: Comply with ASTM C 920 and other requirements indicated for each liquid-applied joint sealant specified, including those referencing ASTM C 920 classifications for type, grade, class, and uses related to exposure and joint substrates.

.8 Stain-Test-Response Characteristics: Where sealants are specified to be non-staining to porous substrates, provide products that have undergone testing according to ASTM C 1248 and have not stained porous joint substrates indicated for Project.

.9 Sealants, cleaning solvents and primers: Compatible with each other.

.10 Colours of Exposed Joint Sealants: As selected by Consultant from manufacturer's full range. Allow for special colours as selected by the Consultant.

2.2 **JOINT SEALANTS**

.1 **Sealant Type 1**: Provide 1 of following:

.1 Multicomponent, non-sag, polyurethane joint sealant, meeting specified requirements of ASTM C 920, Type M, Grade NS, Class 50, for Use NT.

.1 Dymeric 240 by Tremco (Canada),

OR

.2 Multicomponent, non-sag, polyurethane joint sealant, meeting specified requirements of ASTM C 920, Type M, Grade NS, Class 25, for Use NT.

.1 Vulkem 227 by Tremco (Canada),

.2 SikaFlex 2c NS by Sika Canada Inc.

.3 Sonolastic NP2 by BASF Construction Chemicals, LLC-Building Systems.

OR

.3 Non-sag type, 1 component ultra-low-modulus, pre-pigmented, neutral cure elastomeric silicone sealant conforming to ASTM C920, Type S, Grade NS, Class 100/50, Use NT, G, M, A and O. Supply in standard colours as selected.

.1 Dow Corning 790 by Dow Corning Corporation.

.2 GE SCS2700 SilPruf LM by Momentive Performance Materials Inc.

.3 SikaSil-C990 by Sika Canada Inc.

.4 Spectrem 1 by Tremco (Canada).

OR

.4 Non-sag type, 1 component medium-modulus, pre-pigmented, neutral cure elastomeric silicone sealant conforming to ASTM C920, Type S, Grade NS, Class 50, Use NT, G, M, A and O. Supply in standard colours as selected.

.1 Dow Corning 791 by Dow Corning Corporation.

.2 GE SCS2000 SilPruf by Momentive Performance Materials Inc.

.3 SikaSil-C995 by Sika Canada Inc.

.4 Spectrem 2 by Tremco (Canada).

.5 OmniSeal by BASF Construction Chemicals, LLC-Building Systems.

.2 **Sealant Type 2**:

.1 Single-component, non-sag, polyurethane joint sealant meeting specified requirements of ASTM C 920, Type S, Grade NS, Class 25, for Use NT.

.1 Dymonic by Tremco (Canada),

.2 SikaFlex 1a by Sika Canada Inc.

.3 Sonolastic NP1 by BASF Construction Chemicals, LLC-Building Systems.

.3 **Sealant Type 3**: Acrylic latex or siliconized acrylic latex joint sealant meeting specified requirements of ASTM C 834, Type OP, Grade NF.

.1 Tremflex 834 by Tremco Incorporated,

.2 Sonolac by BASF Construction Chemicals, LLC-Building Systems.

.4 **Sealant Type 4**: Mildew-resistant, single-component, acid-curing silicone joint sealant, meeting specified requirements of ASTM C 920, Type S, Grade NS, Class 25, for Use NT, G, A and O.

.1 Tremsil 200 by Tremco (Canada).

.2 Dow Corning 786 by Dow Corning Corporation.

.3 GE SCS1700 Sanitary by Momentive Performance Materials Inc.

.4 OmniPlus by BASF Construction Chemicals, LLC-Building Systems.

.5 **Sealant Type 5**: Single component, non-skinning, non-hardening, non-sag synthetic rubber sealant, tested to reduce airborne sound transmission through perimeter joints and openings in building construction as demonstrated by testing representative assemblies according to ASTM E 90.

.1 Acoustical Sealant by Tremco (Canada).

.6 Preformed expanding foam secondary (or concealed) sealant:

.1 Watertight, 100% free of wax or asphalt compounds, thermal insulating, conforms to gap irregularities, high density open-cell polyurethane foam with microsphere-modified acrylic impregnation technology, sealant sizing in accordance with manufacturer's joint sizing chart.

.2 Movement performance, including tension and shear: +25%, -25% (50% total) of nominal material size.

.3 Acceptable Products:

.1 Backerseal by Emseal Joint Systems, Ltd.

2.3 **MISCELLANEOUS MATERIALS**

.1 Joint primer: As recommended by sealant manufacturer for substrates, conditions and exposures indicated.

.2 Bond breaker: Polyethylene tape or other adhesive faced tape as recommended by sealant manufacturer to prevent sealant contact where it would be detrimental to sealant performance.

.3 Joint backer: Polyethylene foam rod or other compatible non-waxing, non-extruding, non-staining resilient material in dimension 25 percent to 50 percent wider than joint width as recommended by sealant manufacturer for conditions and exposures indicated. Ensure backing is compatible with sealant, primer and substrate.

.4 Masking tape: Non-staining, non-absorbent tape product compatible with sealants and adjacent joint surfaces that is suitable for masking.

.5 Cleaning Material: Non-corrosive, non-staining, solvent type, xylol, MEK, toluol, IPA or as recommended by sealant manufacturer and acceptable to material or finish manufacturers for surfaces adjacent to sealed areas free of oily residues or other substances capable of staining or harming joint substrates and adjacent nonporous surfaces in any way and formulated to promote optimum adhesion of sealants with joint substrates.

PART - 3 EXECUTION

3.1 EXAMINATION

.1 Examine joints indicated to receive joint sealants, with Installer present, for compliance with requirements for joint configuration, installation tolerances, and other conditions affecting joint-sealant performance.

.2 Proceed with installation only after unsatisfactory conditions have been corrected.

3.2 PREPARATION

.1 Prepare surfaces to receive work in accordance with sealant manufacturer's instructions and recommendations except where more stringent requirements are indicated.

.2 Thoroughly clean joint surfaces using cleaners approved by sealant manufacturer whether primers are required or not.

.3 Remove all traces of previous sealant and joint backer by mechanical methods, such as by cutting, grinding and wire brushing, in manner not damaging to surrounding surfaces.

.4 Remove paints from joint surfaces except for permanent, protective coatings tested and approved for sealant adhesion and compatibility by sealant manufacturer.

.5 Remove wax, oil, grease, dirt film residues, temporary protective coatings and other residues by wiping with cleaner recommended for that purpose. Use clean, white, lint-free cloths and change cloths frequently.

.6 Remove dust by blowing clean with oil-free, compressed air.

.7 Joint backer: Provide joint backer uniformly to depth required for proper joint design using a blunt instrument. Fit securely by compressing backer material 25 percent to 50 percent so no displacement occurs during tooling. Avoid stretching or twisting joint backer.

.8 Bond breaker: Provide bond-breaker recommended by sealant manufacturer, adhering strictly to the manufacturer’s installation requirements.

.9 Priming: Prime joint substrates where required. Use and apply primer to sealant manufacturers recommendations. Confine primers to sealant bond surfaces; do not allow spillage or migration onto adjoining surfaces.

.10 Taping: Use masking tape, where required, to prevent sealant or primer contact with adjoining surfaces that would be permanently stained or otherwise damaged by such contact or the cleaning methods required for removal. Apply tape so as not to shift readily, and remove tape immediately after tooling without disturbing joint seal.

3.3 INSTALLATION

.1 Do not apply sealants to joint surfaces treated with sealer, curing compound, water repellent, or other coatings unless tests have been performed to ensure compatibility of materials. Remove coatings as required.

.2 Install sealants immediately after joint preparation.

.3 Mix, apply and cure sealants in accordance with manufacturer's printed instructions.

.4 Install sealants to fill joints completely, without voids or entrapped air, using proven techniques, proper nozzles and sufficient force that result in sealants directly contacting and fully wetting joint surfaces.

.5 Install sealants to uniform cross-sectional shapes with depths relative to joint widths that allow optimum sealant movement capability as recommended by sealant manufacturer.

.6 Dry tool sealants in manner that forces sealant against back of joint, ensures firm, continuous full contact at joint interfaces and leaves a finish that is smooth, uniform and free of ridges, wrinkles, sags, air pockets and embedded impurities.

.1 Tooling liquids that are non-staining, non-damaging to adjacent surfaces and approved by sealant manufacturer may be used if necessary when care is taken to ensure that the liquid does not contact joint surfaces before the sealant.

.2 Provide concave tooled joints unless otherwise indicated to provide flush tooling or recessed tooling.

.3 Provide recessed tooled joints where the outer face of substrate is irregular.

.7 Remove sealant from adjacent surfaces in accordance with sealant and substrate manufacturer recommendations as work progresses.

.8 Do not cover up sealants until proper curing has taken place.

.9 Protect joint sealants from contact with contaminating substances and from damages. Cut out, remove and replace contaminated or damaged sealants immediately, so that they are without contamination or damage at time of Substantial Performance.

3.4 INSTALLATION – COMPRESSIBLE SEALER

.1 Prepare joint faces by grind or wire brush.

.2 Heat and apply compressible sealer in accordance with manufacturer’s instructions. Join consecutive lengths with 45 degree power saw miters. Provide corner bead of liquid silicone tooled between the preformed silicone bellows and substrate

3.5 LOCATION SCHEDULE

.1 Refer to Drawings for sealing work not specifically listed in this Section.

.2 Use one of the sealants specified for each type in following locations. Ensure sealant chosen from several specified types listed under Part 2 Materials, and recommended by manufacturer for use for conditions encountered:

.3 Seal following joints with Sealant Type 1:

.1 Typically used in joints between metal frames and adjacent masonry and/or concrete construction in exterior walls, exterior and interior sides; control and expansion joints in exterior and interior surfaces of poured-in-place concrete walls, precast architectural wall panels and unit masonry walls; sealing of joints between underside of pre-stressed precast concrete floor slabs and masonry; and other locations where sealant is required or noted on Drawings except in locations designated for Type 2, 3, 4 and 5 and except where sealant is specified in other Sections.

.4 Seal following joints with Sealant Type 2 one component modified polyurethane sealant:

.1 Interior masonry and gypsum board control joints.

.5 Seal following joints with Sealant Type 3 acrylic sealant:

.1 Joints between interior metal and/or wood frames and adjacent construction in interior partitions.

.2 Joints between interior aluminum door, window and screen frames and adjacent construction in interior partitions.

.3 Interior joints to receive paint finish.

.6 Seal following joints with Sealant Type 4 mildew resistant silicone sealant:

.1 Typically used in joints between around washrooms accessories, at corners of walls, between splash backs and walls, in shower, damp or wet areas, at ceramic tiles where mildew resistant sealant is required.

.2 Underside of rims of sinks between sink rims and counters.

.3 Around pipes and conduits passing through walls and ceilings in washrooms. Conceal sealant with escutcheons.

.4 Joints in ceramic tile walls where joints occur over control joints in masonry back-up and where joints occur over control joints between cast-in-place concrete and masonry back-up.

.5 Joints between counters/vanities and walls in washrooms.

.7 Seal following joints with Sealant Type 5 Acoustical Sealant

.1 Joints in assemblies with acoustic requirements and as indicated on drawings.

END OF SECTION

PART - 1 GENERAL

1.1 SUMMARY

.1 Section Includes:

.1 Labour, Products, equipment and services necessary to complete the work of this Section for the supply and installation of pressed steel door frames.

.2 Related Requirements:

.1 Comply with Conditions of the Contract and Division 01 - General Requirements.

1.2 REFERENCES

.1 American Society for Testing and Materials (ASTM):

.1 ASTM A568/A568M, Standard Specification for Steel, Sheet, Carbon, Structural, and High-Strength, Low-Alloy, Hot-Rolled and Cold-Rolled, General Requirements for

.2 ASTM A653/A653M, Standard Specification for Steel Sheet, Zinc-Coated (Galvanized) or Zinc-Iron Alloy-Coated (Galvannealed) by the Hot-Dip Process.

.2 Canadian Standards Association (CSA):

.1 CSA-W59: Welded Steel Construction (Metal Arc Welding).

.3 Canadian General Standards Board (CGSB):

.1 CAN/CGSB-1.40: Anti-corrosive Structural Steel Alkyd Primer.

.4 DHI (Door Hardware Institute) - The Installation of Commercial Steel Doors and Steel Frames, Insulated Steel Doors in Wood Frames and Builder's Hardware.

.1 ANSI/DHI A115.IG: Installation Guide for Doors and Hardware.

.5 CSDFMA (Canadian Steel Door and Frame Manufacturers Association).

.6 SDI-100 - Standard Steel Doors and Frames.

.7 NAAMM HMMA 802: Manufacturing of Hollow Metal Doors and Frames.

.8 NAAMM HMMA 840: Guide Specification for Installation and Storage of Hollow Metal Doors and Frames.

1.3 ACTION SUBMITTALS

.1 Product Data: For each type of product.

.1 Include construction details, material descriptions, fire-resistance ratings, and finishes.

.2 Shop Drawings: Include the following:

.1 Frame details for each frame type, including dimensioned profiles and metal thicknesses;

.2 Fire rating;

.3 Locations of reinforcement and preparations for hardware;

.4 Details of each different wall opening condition;

.5 Details of anchorages, joints, field splices, and connections;

.6 Details of moldings, removable stops, and glazing;

.7 Details of conduit and preparations for power, signal, and control systems.

.3 Samples: Submit one sample of frame, 300 x 300 mm in size, illustrating factory finish, frame colours, and surface texture.

.4 Submit a copy of NAMMA-HMMA 840 to the contractor responsible for the storage and installation of hollow metal doors and frames.

1.4 **REQUIREMENTS OF REGULATORY AGENCIES**

.1 Fire rated assemblies: Labelled and listed by a nationally recognized testing agency having factory inspection service in conformance with CAN/ULC-S104 and CAN/ULC-S105 for ratings indicated.

.2 Install fire rated assemblies to NFPA 80 except where specified otherwise.

1.5 **DELIVERY, STORAGE, AND HANDLING**

.1 Deliver hollow-metal work palletized, packaged, or crated to provide protection during transit and Project-site storage. Do not use non-vented plastic.

.1 Provide additional protection to prevent damage to factory-finished units.

.2 Deliver welded frames with two removable spreader bars across bottom of frames, tack welded to jambs and mullions.

.3 Store hollow-metal work vertically under cover at Project site with head up. Place on minimum 100 mm high wood blocking. Provide minimum 6 mm space between each unit to permit air circulation.

PART - 2 PRODUCTS

2.1 **MATERIALS**

.1 Galvanized steel sheet: ASTM A653/653M, Commercial Steel (CS), Type B, coating designation A40 (ZF120).

.2 Minimum thickness:

.1 Door frame: 1.6 mm.

.2 Lock and strike reinforcements: 1.6 mm.

.3 Hinge reinforcements: 3.4 mm.

.4 Anchors: 0.9 mm.

.5 Closer and magnetic lock reinforcements: 2.7 mm.

.6 Glazing stops: 0.9 mm.

.3 Resilient bumpers: Round, black rubber, stud mount.

.4 Materials for fire rated doors and frames: Complying with labelling authority requirements.

.5 Primer: Zinc rich primer.

.6 Mullions and Transom Bars: Join to adjacent members by welding or rigid mechanical anchors.

.7 Grout Guards: Formed from same material as frames, not less than 0.4 mm thick.

2.2 **FABRICATION**

.1 Fabricate hollow-metal work to be rigid and free of defects, warp, or buckle. Accurately form metal to required sizes and profiles, with minimum radius for metal thickness. Where practical, fit and assemble units in manufacturer's plant. To ensure proper assembly at

Project site, clearly identify work that cannot be permanently factory assembled before shipment.

.2 Sidelight and Transom Bar Frames: Provide closed tubular members with no visible face seams or joints, fabricated from same material as door frame. Fasten members at crossings and to jambs by butt welding.

.3 Provide countersunk, flat- or oval-head exposed screws and bolts for exposed fasteners unless otherwise indicated.

.4 Grout Guards: Weld guards to frame at back of hardware mortises in frames to be grouted.

.5 Floor Anchors: Weld anchors to bottoms of jambs with at least four spot welds per anchor; however, for slip-on drywall frames, provide anchor clips or countersunk holes at bottoms of jambs.

.6 Jamb Anchors: Provide number and spacing of anchors as follows:

.1 Masonry Type: Locate anchors not more than 406 mm from top and bottom of frame. Space anchors not more than 813 mm o.c., to match coursing, and as follows:

.1 Two anchors per jamb up to 1524 mm high.

.2 Three anchors per jamb from 1524 to 2286 mm high.

.3 Four anchors per jamb from 2286 to 3048 mm high.

.4 Four anchors per jamb plus one additional anchor per jamb for each 610 mm or fraction thereof above 3048 mm high.

.2 Stud-Wall Type: Locate anchors not more than 457 mm from top and bottom of frame. Space anchors not more than 813 mm o.c. and as follows:

.1 Three anchors per jamb up to 1524 mm high.

.2 Four anchors per jamb from 1524 to 2286 mm high.

.3 Five anchors per jamb from 2286 to 2438 mm high.

.4 Five anchors per jamb plus one additional anchor per jamb for each 610 mm or fraction thereof above 2438 mm high.

.3 Compression Type: Not less than two anchors in each frame.

.4 Postinstalled Expansion Type: Locate anchors not more than 152 mm from top and bottom of frame. Space anchors not more than 660 mm o.c.

.7 Head Anchors: Two anchors per head for frames more than 1067 mm wide and mounted in metal-stud partitions.

.8 Door Silencers: Except on weather-stripped frames, drill stops to receive door silencers as follows. Keep holes clear during construction.

.1 Single-Door Frames: Drill stop in strike jamb to receive three door silencers.

.2 Double-Door Frames: Drill stop in head jamb to receive two door silencers.

.9 Terminated Stops: Terminate stops 152 mm above finish floor with a 90-degree angle cut, and close open end of stop with steel sheet closure. Cover opening in extension of frame with welded-steel filler plate, with welds ground smooth and flush with frame.

.10 Cut mitres and joints accurately and weld continuously on inside of frame profile.

.11 Grind welded corners and joints to flat plane, fill with metallic paste filler and sand to uniform smooth finish.

.12 Knock down frames will not be allowed.

.13 Provide jamb anchors for fixing at floor.

.14 Provide 3 bumpers on strike jamb for each single door.

.15 Fabricate thermally broken frames for exterior doors using steel core, separating exterior portion of frame from interior portion with polyvinyl chloride thermal breaks.

.16 Hardware Preparation: Factory prepare hollow-metal work to receive templated mortised hardware; include cutouts, reinforcement, mortising, drilling, and tapping according to SDI A250.6, the Door Hardware Schedule, and templates.

.1 Reinforce frames to receive nontemplated, mortised, and surface-mounted hardware.

.2 Comply with applicable requirements in SDI A250.6 and BHMA A156.115 for preparation of hollow-metal work for hardware.

.17 Blank, reinforce, drill and tap frames for mortised hardware. Reinforce frames for surface mounted hardware.

.18 Stops and Moldings: Provide stops and moldings around glazed lites and louvers where indicated. Form corners of stops and moldings with butted or mitered hairline joints.

.1 Single Glazed Lites: Provide fixed stops and moldings welded on secure side of hollow-metal work.

.2 Multiple Glazed Lites: Provide fixed and removable stops and moldings so that each glazed lite is capable of being removed independently.

.3 Provide fixed frame moldings on outside of exterior and on secure side of interior frames.

.4 Provide loose stops and moldings on inside of hollow-metal work.

.5 Coordinate rabbet width between fixed and removable stops with glazing and installation types indicated.

.19 Apply, at factory, touch up primer to doors and frames manufactured from galvanized steel where coating has been removed during fabrication.

.20 Make provisions in doors and frames to suit requirements of Section providing security devices.

.21 Fabricate fire rated assemblies to ULC requirements and bearing ULC, ULI or Warnock-Hersey International Ltd., label, as acceptable to authorities having jurisdiction.

.22 Locate fire rating labels on the inside of the frame hinge jamb and door hinge edge midway between the top hinge and the head of the door.

PART - 3 EXECUTION

3.1 EXAMINATION

.1 Examine substrates, areas, and conditions, with Installer present, for compliance with requirements for installation tolerances and other conditions affecting performance of the Work.

.2 Examine roughing-in for embedded and built-in anchors to verify actual locations before frame installation.

.3 Proceed with installation only after unsatisfactory conditions have been corrected.

3.2 **PREPARATION**

.1 Remove welded-in shipping spreaders installed at factory. Restore exposed finish by grinding, filling, and dressing, as required to make repaired area smooth, flush, and invisible on exposed faces.

.2 Drill and tap frames to receive non-templated, mortised, and surface-mounted hardware.

3.3 **INSTALLATION**

.1 General: Install hollow-metal work plumb, rigid, properly aligned, and securely fastened in place. Comply with Drawings and manufacturer's written instructions.

.2 Hollow-Metal Frames: Install hollow-metal frames of size and profile indicated. Comply with SDI A250.11 or NAAMM-HMMA 840 as required by standards specified.

.3 Set frames accurately in position; plumbed, aligned, and braced securely until permanent anchors are set. After wall construction is complete, remove temporary braces, leaving surfaces smooth and undamaged.

.1 At fire-rated openings, install frames according to NFPA 80.

.2 Where frames are fabricated in sections because of shipping or handling limitations, field splice at approved locations by welding face joint continuously; grind, fill, dress, and make splice smooth, flush, and invisible on exposed faces.

.3 Install frames with removable stops located on secure side of opening.

.4 Install door silencers in frames before grouting.

.5 Remove temporary braces necessary for installation only after frames have been properly set and secured.

.6 Check plumb, square, and twist of frames as walls are constructed. Shim as necessary to comply with installation tolerances.

.7 Field apply bituminous coating to backs of frames that will be filled with grout containing antifreezing agents.

.4 Floor Anchors: Provide floor anchors for each jamb and mullion that extends to floor, and secure with postinstalled expansion anchors.

.5 Metal-Stud Partitions: Solidly pack mineral-fiber insulation inside frames.

.6 Masonry Walls: Coordinate installation of frames to allow for solidly filling space between frames and masonry with grout.

.7 Concrete Walls: Solidly fill space between frames and concrete with mineral-fiber insulation.

.8 In-Place Concrete or Masonry Construction: Secure frames in place with postinstalled expansion anchors. Countersink anchors, and fill and make smooth, flush, and invisible on exposed faces.

.9 In-Place Metal or Wood-Stud Partitions: Secure slip-on drywall frames in place according to manufacturer's written instructions.

.10 Installation Tolerances: Adjust hollow-metal door frames for squareness, alignment, twist, and plumb to the following tolerances:

.1 Squareness: Plus or minus 1.6 mm , measured at door rabbet on a line 90 degrees from jamb perpendicular to frame head.

.2 Alignment: Plus or minus 1.6 mm , measured at jambs on a horizontal line parallel to plane of wall.

.3 Twist: Plus or minus 1.6 mm , measured at opposite face corners of jambs on parallel lines, and perpendicular to plane of wall.

.4 Plumbness: Plus or minus 1.6 mm , measured at jambs at floor.

.11 Glazing: Comply with installation requirements in Section 08 80 00 Glazing, and with hollow-metal manufacturer's written instructions.

.1 Secure stops with countersunk flat- or oval-head machine screws spaced uniformly not more than 230 mm o.c. and not more than 51 mm o.c. from each corner.

.12 Touch up with primer galvanized finish damaged during installation.

.13 Set frames plumb, square, level and at correct elevation.

.14 Provide suitable anchors to suit construction. Use one base anchor and two wall anchors per jamb side for frames up to 1500 mm and one additional wall anchor per jamb side for each additional height of 750 mm or fraction thereof.

.15 Secure anchorages and connections to adjacent construction.

.16 Brace frames rigidly in position while building-in. Install temporary horizontal wood spreader at third points of door opening to maintain frame width. Remove temporary spreaders after frames are built-in.

.17 Make allowances for deflection of structure to ensure structural loads are not transmitted to frames.

3.4 **ADJUSTING AND CLEANING**

.1 Final Adjustments: Remove and replace defective work, including hollow-metal work that is warped, bowed, or otherwise unacceptable.

.2 Remove grout and other bonding material from hollow-metal work immediately after installation.

.3 Prime-Coat Touchup: Immediately after erection, sand smooth rusted or damaged areas of prime coat and apply touchup of compatible air-drying, rust-inhibitive primer.

END OF SECTION

PART - 1 GENERAL

1.1 SUMMARY

.1 Section Includes:

.1 Labour, Products, equipment, and services necessary to complete the work of this Section, including but not limited to:

.1 Solid-core wood doors with MDO faces.

.2 Factory finishing of wood doors.

.2 Related Requirements

.1 Comply with Conditions of the Contract and Division 01 - General Requirements.

.2 Section 08 12 00 Metal Frames: for pressed steel door frames.

1.2 REFERENCES

.1 Abbreviations and Acronyms:

.1 AWMAC: Architectural Woodwork Manufacturers Association of Canada; www.awmac.com.

.2 FSC: Forest Stewardship Council; www.fsccanada.org.

.3 MDO: Medium Density Overlay.

.4 NAAWS: North American Architectural Woodwork Standards, latest edition including all errata and supplements, a jointly sponsored by Architectural Woodwork Manufacturers Association of Canada (AWMAC) and the Woodwork Institute (WI).

.2 Reference Standards:

.1 ANSI/WDMA IS-1A, Architectural Wood Flush Doors.

.2 ASTM E90, Standard Test Method for Laboratory Measurement of Airborne Sound Transmission Loss of Building Partitions and Elements.

.3 ASTM E413, Classification for Rating Sound Insulation.

.4 CSA O112 Series-M77 (R2006), CSA Standards for Wood Adhesive.

.5 CAN/ULC-S104, Standard Method for Fire Tests of Door Assemblies.

.6 CAN/ULC S105, Standard Specification for Fire Door Frames Meeting the Performance Required by CAN/ULC-S104.

.7 CAN/ULC-S113, Standard Specification for Wood Core Doors Meeting the Performance Required by CAN/ULC-S104 for Twenty Minute Fire Rated Closure Assemblies.

.8 NFPA 80 - Standard for Fire Doors and Fire Windows.

.9 NFPA 252 - Standard Methods of Fire Tests of Door Assemblies.

.10 UL 10B - Underwriters Laboratories Fire Tests for Door Assemblies.

.11 ITS/Warnock Hersey Mark for Fire Door Test Certification.

1.3 DEFINITIONS

.1 Exposed surfaces: Surfaces visible when doors are opened, backs of hinged doors and edges of hinged doors exposed when opened.

.2 Pre-machined: Factory prepared cut-outs for hardware and glazing. Site trimming of work will not be permitted, except trimming of door height.

1.4 **SUBMITTALS**

.1 Product Data: For each type of door include details of core and edge construction**,** louvres**,** and trim for openings.

.2 Samples:

.1 Door Sample: Submit one 300 mm x 300 mm (corner sample showing construction, edge details, core, and face veneers.

.2 Frame Sample: Submit one 300 mm (long corner sample showing profiles, jointing method, face veneer, and glazing details.

.3 Factory Finish Control Samples: Submit duplicate 300 mm x 300 mm (stain finished wood veneer samples on representative substrates. Resubmit samples until approval is granted. After approval is obtained, divide one approved sample into four equal sized pieces and distribute to:

.1 Owner: Two pieces.

.2 Site: One piece.

.3 This Section: One piece.

.4 Provide glass size, type and thickness for factory glazed doors.

.3 Shop Drawings: Indicate location, size, type, and hand of each door; elevation of each kind of door; construction details not covered in Product Data; door schedule; and other pertinent data including the following:

.1 Dimensions and locations of hardware blocking.

.2 Dimensions and locations of cutouts, mortises and holes for hardware.

.3 Identify cut outs for louvers and glazing.

.4 Undercuts.

.5 Factory finish requirements.

.6 Fire ratings for fire doors.

.7 Jointing, fastening and related items.

1.5 **QUALITY ASSURANCE**

.1 Qualifications: Work of this Section shall be done by manufacturer and tradesmen with experience in successful manufacture and installation of this type of work and of quality as indicated on Drawings and as specified. Submit proof of such experience with list of installations in Ontario upon Consultant's request.

.2 Quality of work and materials: Unless otherwise specified, comply with the requirements for Premium Grade in accordance with the NAAWS standards.

.3 Factory Finish: Apply finish in accordance with the NAAWS standards and to match samples at Consultant's office.

.4 Finish Matching: Finish for solid wood members shall match wood veneer finish.

.5 Source Limitations, Doors: Obtain doors through one source from a single manufacturer.

.6 Source Limitations, Frames: Obtain frames through one source from a single manufacturer.

1.6 **REQUIREMENTS OF REGULATORY AGENCIES**

.1 Fire rated doors and frames: Labelled and listed by a nationally recognized testing agency having factory inspection service in conformance with CAN/ULC S104 and CAN/ULC S105 for ratings indicated.

.2 Install fire rated assemblies to NFPA 80 except where specified otherwise.

1.7 **DELIVERY, STORAGE, AND HANDLING**

.1 Package doors individually in cardboard cartons and wrap bundles of doors in plastic sheeting.

.2 Ensure complete protection of edges and finishes during shipment to the job site.

.3 Mark each door on top and bottom rail with opening number used on Shop Drawings.

.4 Store work in well ventilated room, off floor, in accordance with manufacturer's recommendations.

1.8 **PROJECT CONDITIONS**

.1 Environmental Limitations: Do not deliver or install doors until building is enclosed, wet work is complete, and HVAC system is operating and will maintain temperature and relative humidity at occupancy levels during the remainder of the construction period.

1.9 **WARRANTY**

.1 Provide a 5 year warranty commencing on date of Substantial Performance against defects in the materials and workmanship for wood doors, including but not limited to warping, cupping, twisting, shrinkage, swelling, delamination and splitting.

PART - 2 PRODUCTS

2.1 **GENERAL**

.1 All composite wood and agrifibre products (including core materials) used in the building must not contain added formaldehyde.

.2 Adhesives used to fabricate laminated assemblies used in the building that contain composite wood and agrifibre products must not contain added formaldehyde.

.3 Adhesives used must meet VOC requirements.

.4 Regulatory Requirements:

.1 Conform to NAAWS standards Section 9 or ASNI/WDMA I.S. 1A for wood flush doors and NAAWS standards Section 9 or ANSI/WDMA I.S. 6A for stile and rail doors, except as specified herein.

.2 Submit certification that fire-rated door has been tested in conformance to CAN/ULC-S104 or UL 10B, NFPA 80 and NFPA 252 as indicated on Drawings and Schedule.

.3 Ensure wood doors requiring fire rating carry either UL or ITS (Warnock Hersey) label.

.4 Submit certification that acoustic rated door construction meets ASTM E90 and ASTM E413 classification as indicated on Drawings or Schedule.

2.2 **MATERIALS**

.1 Plywood Door Face for Paint Finish: CSA 0115, 3 ply, 3 mm thick minimum, birch veneer, paint grade.

.2 Exposed solid members and trim: Cherry woodwood species as indicated in Section 09 06 00, Finishes Schedule, quarter sawn, architectural grade, matched for compatibility of grain and colour.

.3 Exposed Vertical Edges: Veneer minimum 13 mm (1/2") thick, of same species as face veneer for transparent finish; hardwood for paint finish.

.4 Particleboard: CSA-O188.1, extruded particle board, minimum density of 448 kg/cu.m.

.5 Mineral Core: Incombustible mineral as required by Underwriter's Laboratories of Canada, for the rating indicated.

.6 Medium Density Fibreboard: Premium grade, minimum 768 kg/cu.m. (48 pcf.) density, fire retardant treated, acceptable to authority having jurisdiction.

.7 Crossbanding: Composite or 1.6 mm thick hardwood.

.8 Stiles and Rails: Hardwood or structural composite lumber/hardwood. Stile thickness minimum 38 mm(and rail thickness minimum 28 mm.

.9 Hardware Blocking, Non-Rated Doors: 150 mm glued block or structural composite lumber in particleboard core doors as follows:

.1 Top rail blocking in doors indicated to have closers.

.2 Bottom rail blocking in doors indicated to have kick or mop plates, and mortised or surface bottom door sweeps.

.3 Midrail blocking, in doors indicated to have exit devices.

.10 Hardware Blocking, Fire Protection Rated Doors: Fire resistant materials acceptable to authorities having jurisdiction, for positive attachments of closers, exit devices, hinges and locksets.

.11 Resilient Bumpers: Round, black rubber, 3 mm thick, adhesive mount.

.12 Factory Finish: NAAWS System 5, Premium Grade, Conversion Varnish .

.13 Adhesive: Waterproof type, suitable for specific end use.

.14 Metal Louvres: in accordance with Division 23.

2.3 **FABRICATION - GENERAL**

.1 Use wood veneer of same species on doors and frames.

.2 Fabricate fire rated assemblies to ULC requirements and bearing ULC, ULI or Warnock-Hersey International Ltd., label, as acceptable to authorities having jurisdiction for the required fire protection ratings.

.3 Locate fire rating labels on the inside of the frame hinge jamb and door hinge edge midway between the top hinge and the head of the door.

.4 Pre-machine work in factory.

2.4 **FABRICATION - DOORS**

.1 Paint Grade Doors Fire Doors, Solid Core: Mineral core, 7 ply construction, full length rails and triple ply laminated hardwood, plastic and hardboard stiles bonded to core. NAAWS Type D edge. Top, bottom and lock blocking. Laminate crossbandings to core, stiles and rails. Hot press veneer in accordance with manufacturer's instructions. Provide centre blocking for exit devices.

.2 Paint Grade Doors, Solid Core: Particleboard core, 7 ply construction, full length stiles and rails bonded to core. NAAWS Type A edge. Laminate plywood face to stiles, rails and core, under pressure and in accordance with manufacturer's instruction.

.3 Completely seal wood edges and edges of cut-outs in shop for doors scheduled to receive paint finish. Apply sealer in accordance with the manufacturer's printed instructions.

.4 Bevel edges of single acting doors 3 mm on lock side and 1.6 mm on hinge side.

.5 Undercut doors for carpet in the plant.

2.5 **FACTORY FINISH**

.1 Factory finish work scheduled to receive stained and clear finish to match approved control sample. Apply finish in accordance with manufacturer's approved methods using approved equipment to cut outs, and exposed surfaces. Unfinished work will be listed as deficiencies.

.2 Spray finish work to NAAWS System 5 Conversion Varnish, Premium Grade. Apply wash coat. Let dry and sand lightly. Apply first shade coat, let dry and sand. Apply second shade/toner coat, let dry and sand. Apply 1 coat of sealer, let dry and sand. Apply topcoat with clear conversion varnish, 45 degree sheen.

.3 Sand smooth work and clean surfaces free of dust before applying successive coat. Carefully sand with even strokes to provide perfect, scratch-free surface.

PART - 3 EXECUTION

3.1 **INSTALLATION**

.1 Install work of this Section plumb, square, true, rigid and secure. Conceal fastenings in the finished work unless otherwise indicated on final reviewed shop drawings and in accordance with manufacturer's printed instructions.

.2 Install wood doors after finishing of walls.

.3 Ensure that top and bottom edges of wood doors are sealed if they are cut to fit, in accordance with door manufacturer’s instructions and warranty requirements.

.4 Install doors in accordance with manufacturer's instructions.

.5 Pilot drill screw and bolt holes.

.6 Machine cut for hardware. Core for handsets and cylinders.

.7 Coordinate installation of doors with installation of frames specified in Section 08 12 00, and hardware specified in Section 08 71 00.

.8 Conform to NAAWS standards for fit, clearance, and joint tolerances.

.9 Provide even margins between doors and jambs and doors and finished floor as follows:

.1 Hinge side: 3 mm.

.2 Latchside and head: 3 mm.

.3 Finished floor for non-rated assemblies: 12 mm.

.4 Finished floor for rated assemblies: 6 mm.

3.2 **ADJUSTMENT AND CLEANING**

.1 Adjust doors to swing freely, smoothly and easily, to remain stationary at any point, to close evenly and tightly against stops without binding, and to latch positively when doors are closed with moderate force.

.2 Adjust hardware so that latches and locks operate smoothly and without binding, and closers act positively with the least possible resistance in use. Lubricate hardware if required by Supplier’s instructions.

.3 Ensure that doors equipped with closers operate to close doors firmly against anticipated wind and building air pressure, and to enable doors to be readily opened as suitable for function, location and traffic.

.4 Clean hardware after installation in accordance with Supplier's instructions.

.5 Sand and clean woodwork to leave free from finish defects in any exposed part.

END OF SECTION

PART - 1 GENERAL

1.1 SUMMARY

.1 Section Includes:

.1 Labour, Products, equipment and services necessary to complete the work of this Section.

1.2 QUALITY ASSURANCE

.1 Conduct pre-installation meeting to verify project requirements, manufacture's installation instructions and manufacturer's warranty requirements.

.2 Have the supervision, administration and servicing of the work of this Section performed by a hardware specialist certified as an Architectural Hardware Consultant (AHC).

.3 Have the installation of hardware performed by a firm which specializes in this work.

.4 Have the hardware installer fully cooperate with the hardware specialist to ensure doors and hardware are properly and securely installed and that the installed doors and hardware are functioning properly.

1.3 SUBMITTALS

.1 Shop Drawings:

.1 The hardware specialist shall prepare and submit shop drawings containing a completely itemized schedule of hardware for review. The schedule of hardware shall list all doors by number (in sequence) and location with complete details of the hardware to be supplied, including installation heights and special instructions. Format of schedule to be approved.

.2 The schedule of hardware shall incorporate the catalogue numbers of hardware as specified and all alternatives which have been accepted.

.3 The Contractor shall furnish copies of final reviewed shop drawings to the doors and frames fabricators and to the door and hardware installers.

.2 Wiring Diagrams: Include complete wiring diagrams indicating all component parts, disconnect switches, conduit, and voltage requirements provided under other Sections, and required to operate assembly.

.3 Samples: The hardware specialist shall submit complete samples of hardware items for review, if so requested.

.4 Templates: The hardware specialist promptly furnish templates and information necessary for proper preparation or doors and frames and for the installation of hardware to the doors and frames fabricator and to the doors and hardware installer, in ample time to facilitate the progress of the work.

.5 Furnish manufacturers' instructions for proper installation of each hardware component.

.6 Maintenance instructions manual: Prior to Date of Substantial Performance, hand over to the Owner, a manual containing a final "as built" hardware schedule, full instructions for the adjustment, maintenance, spare part list etc. of all hardware items, together with special keys, wrenches etc. required to carry out normal adjustments to hardware.

.7 Certification: Prior to date of Substantial Performance, have the hardware specialist provide a letter which certifies that the doors, frames and hardware installations have been inspected and are satisfactory.

1.4 **INSPECTION AND SUPERVISION**

.1 The hardware specialist shall examine the Drawings, Hardware Schedules and shop drawings to determine final dimensions, sizes and quantity of the hardware items required, ensure that the hardware listed shall fit and operate properly and make adjustments to the hardware at no extra cost to the Owner.

.2 The hardware specialist shall obtain electrical characteristics of the security and fire alarm systems from the electrical Subcontractor and furnish electrically operated hardware which suits the electrical characteristics and wiring connection requirements at no extra cost to the Owner.

.3 The hardware specialist shall obtain and examine shop drawings for doors and frames to ensure proper provisions and preparations for hardware are made.

.4 The hardware specialist shall make periodic inspections of the hardware and door installations, report improper and unsatisfactory conditions and expedite the replacement or correction of faulty hardware.

.5 The hardware specialist and the door and hardware installer shall attend job site meetings when so requested.

1.5 **LABELLING, PACKAGING, DELIVERY AND STORAGE**

.1 Deliver and store each hardware item in the manufacturers' original containers. The containers shall be clearly labelled as to content and door on which the hardware is to be installed, in accordance with the shop drawing schedule of hardware.

.2 The hardware specialist shall be responsible for ensuring the timely delivery of hardware so that all on site work progresses without delay and interruptions.

.3 Store hardware in a locked storage room in the building. Lay out all hardware in an organized manner on shelves.

.4 Stockpile items sufficiently in advance to ensure their availability and make all necessary deliveries in a timely manner to ensure orderly progress of the total Work.

.5 Store items in such a manner to allow easy access to each hardware item/group as needed without significantly disrupting storage arrangement.

.6 Review shipments at time of arrival on the site to ensure agreement with respect to items shipped and received, quantity, back ordered or short-shipped items, and adherence to hardware schedule.

1.6 **EXTENDED WARRANTY**

.1 Fully warrant exit devices, locksets, latchsets and door closers for a period of five (5) years from the date of Substantial Performance of the Project.

.2 The warranty shall state expressly that all hardware will be replaced on the doors and frames at no cost to the Owner in the event of breakage or other defect occurring, willful damage excluded.

PART - 2 PRODUCTS

2.1 **HARDWARE SCHEDULE AND ALTERNATIVES**

.1 The hardware schedule will be used for the purposes of establishing the hardware requirements and the hardware quality level.

.2 While certain manufacturer's catalogue numbers are used in the schedule of finishing hardware, it is not the intent that these items are specified exclusively. The manufacturer's numbers are used to denote minimum quality, style, design function, finish. Specified items that must be supplied without substitution are electrical strikes, locksets and latchsets, automatic door operators, security contracts, and alarms.

.3 Other manufacturer's products may be used providing the items are equal in all respects to the items specified, except as noted above.

.4 The Hardware Contractor shall submit a complete physical sample of each hardware type for review prior to the preparation of shop drawings. All hardware delivered to the job sites shall be equal in all respects to the accepted sample.

.5 List all manufacturer's names and complete catalogue number of all alternative hardware types proposed for supply and submit this list for review before preparing shop drawings.

.6 The Consultant's decision on the quality of proposed alternative products shall be final.

.7 Any proposed item that in the opinion of the Consultant is not equal to the item specified will be rejected and the supplier shall be required to supply items equal to the one specified at no extra cost.

2.2 **MATERIALS**

.1 General:

.1 Hardware shall be as specified in the hardware schedule prepared under the direction of the Consultant and as specified in this Section.

.2 Installed hardware shall comply with applicable fire and building codes and requirements of local authorities having jurisdiction over doors and hardware.

.3 All hardware applied to metal doors and frames shall be made to template.

.4 Supply hardware complete with all necessary screws, bolts and other fastening of suitable size and type to anchor the hardware in position neatly and properly in accordance with the best practices and to the Consultant's approval.

.5 All fastenings shall harmonize with the hardware as to materials and finishes.

.6 Hardware for fire rated and labelled door and frame assemblies: ULC listed or as accepted by authorities having jurisdiction.

.7 Finish on all stainless steel items (C32D) shall be equal to No. 4 finish.

.2 Hinges:

.1 Hinges for exterior doors shall be non-ferrous metal parts so that rust will not bleed from the bearing or other parts. Screws shall be provided in stainless steel.

.2 Where specified, provide hinges with non-removable pins or with safety stud feature to prevent doors being removed from frames even if pins are removed.

.3 Stamp hinge catalogue numbers on face of leaf of each hinge at factory to enable easy recognition of hinge material and manufacture after doors are hung.

.4 Where doors are required to swing to 180 degrees, furnish hinges of sufficient throw to clear trim.

.5 Furnish non-removable pins at out-swinging exterior doors.

.6 Supply concealed wired electric hinges with ULC label. Hinges to have 8 wires.

.3 Locks and Latches:

.1 Provide and install all locks and latches exactly as specified, complete with cylinders.

.2 Strikes shall be ANSI standard size with curved lip strikes for latch bolts and no lip strikes for dead locks. Provide complete with wrought boxes finished to match strike.

.4 Exit Devices:

.1 All exit devices installed on labelled fire doors shall bear the ULC Label.

.2 Through bolts complete with sleeves for mineral core doors.

.3 Coordinate exit devices with astragals, coordinators, carry open bars and thresholds for correct and safe operation.

.5 Keying:

.1 All locks and exit devices with cylinder operation shall be grand masterkeyed to Owner's requirements.

.2 Prepare a detailed keying schedule and submit to the Consultant for review. Revise as necessary to suit Owner's requirements before ordering cylinders. The Consultant will hand over to the hardware supplier a list of the Owner masterkeying requirements.

.3 Stamp all keys "DO NOT DUPLICATE".

.4 Provide 2 change keys for each lock. 3 keys for each submaster level and 6 grand master keys. In the case of keyed alike groups, supply 6 (six) cut keys only and supply the balance as blanks.

.5 Allow for keying as required including key alike sets and keyed different sets.

.6 Construction Keying:

.1 All lock cylinders shall have a construction masterkey system.

.2 The construction key system to be inoperative once the Owner's keys are inserted in the cylinders.

.3 Provide 12 construction master keys.

.7 Closers:

.1 All door closers shall be hydraulically controlled and full rack and pinion in operation.

.2 Each closer shall have adjustable general speed, latch speed and back check control.

.3 The swing power of door closers shall be adjustable.

.4 Supply to the Owner special closer keys and wrenches as usually packed with closers.

.5 Install all necessary attaching brackets, mounting channels, cover plates, etc. where necessary for correct application of door closers.

.6 Closers to have parallel arms at out swinging exterior doors and at interior doors where specified.

.7 Coordinate closers with overhead holders.

.8 Through bolts complete with sleeves for mineral core doors.

.8 Thresholds:

.1 Provide and install thresholds exactly as specified in required widths and lengths to suit door openings.

.2 The ends of the thresholds shall be cut to follow exactly the door frame profile.

.3 All thresholds shall be supplied in aluminum and installed complete with lead shields and stainless steel screws.

.9 Push Plates and Kickplates

.1 Provide and install stainless steel plates in C32D finish and install secure with screw fastening.

.2 Length of kick plates shall be 40 mm less than door width for single doors and 3/4" less than door width for doors in pairs.

.3 All stainless steel plates are to be 1.3 mm thick, free of rough or sharp edges. Corners and edges to be slightly radiuses. Install kick plates and armour plates on both sides of the door with 3M tape.

.4 Engrave pushplates with pictographs as noted in hardware schedule.

.10 Door Push/Pulls:

.1 Where door pulls are scheduled on one side of door and push plates on other side issue installations instructions to ensure that the pull is secured through door from reverse side and countersunk flush with door installation of push plate. Locate push plate to cover fasteners for door pulls.

.11 Door Stops:

.1 Wall stops shall not be installed on drywall partitions.

.2 Floor stops shall be installed so as not to create a tripping hazard and allows maximum opening of doors.

.3 Furnish door stops of height to engage doors.

.12 Door Seals:

.1 Provide and install door seals, top door sweeps and astragals.

.13 Electronic Hardware Items:

.1 Ensure electrical characteristics are compatible with card readers and related security systems provided by other Sections.

.2 Obtain electrical power and wiring characteristics from the Electrical Subcontractor and from the Electronic Security Subcontractor and provide the hardware to suit.

.3 Power Door Operators: Install operators by skilled trade persons who have been specifically trained in the installation and operation of these devices by a manufacturer's factory representative.

.4 All wiring shall be supplied and installed by Division 26 including conduit, boxes and other electrical appurtenances, including connection and termination.

.5 Be responsible for ensuring that all wiring work is performed at appropriate times to coordinate with installation of frames, doors and finish hardware. It is also responsible for ensuring that all electrical work is done in accordance with electronic hardware manufacturer's wiring diagrams and directions and that boxes, cut-outs, connections etc. are installed properly.

.6 Arrange for testing and commissioning of electronic finish hardware by manufacturer or system. Submit a copy of reports to Consultant.

.14 Miscellaneous Accessories:

.1 All other items, not specifically described but required for complete and proper installation of finish hardware, shall be as selected by Hardware Supplier subject to approval of the Consultant.

.15 Hardware Finish Codes:

	BHMA	Canadian Code	US Code	Description
.1	600	CP	USP	Primed for Paint
.2	602	C2C	US2C	Cadmium Plated
.3	603	C2G	US2G	Zinc Plated
.4	605	C3	US3	Brightened Brass, Clear Coated
.5	606	C4	US4	Satin Brass, Clear Coated
.6	612	C10	US10B	Satin Bronze, Clear Coated
.7	613	C10B	US10B	Oxidized Satin Bronze Oil Rub
.8	619	C15	US15	Satin Nickel Plate, Clear Coat
.9	625	C26	US26	Bright Chromium Plated
.10	626	C26D	US26D	Satin Chromium Plated
.11	627	C27	US27	Satin Aluminum Clear Coated
.12	628	C28	US28	Satin Aluminum Clear Anodize
.13	629	C32	US32	Polished Stainless Steel
.14	630	C32D	US32D	Satin Stainless Steel
.15	671	AL		Black Anodized
.16	689	SBL, AL	US28	Aluminum Paint
.17	690	DBL, STAT	US20	Dark Bronze Paint
.18	691	ES, SB		Bronze Lacquer
.19	692	TAN		Tan Lacquer
.20	693	KPD, BLACK		Black Lacquer
.21	696	EAB, SB		Satin Brass Lacquer

.16 keying symbol/codes:

.1	GGMK	Great Grand Master Keyed
.2	GMK	Grand Master Keyed
.3	MK	Master Keyed
.4	KA	Keyed Alike
.5	KD	Keyed Different
.6	SK	Separate Key (no masters)

.17 Hardware codes:

.1	LH	Left Hand
,2	RH	Right Hand
.3	LHR	Left Hand Reverse
.4	RHR	Right Hand Reverse
.5	LHA	Left Hand Active
.6	RHA	Right Hand Active
.7	LHRA	Left Hand Reverse Active
.8	RHRA	Right Hand Reverse Active
.9	SGL,SGLE	Single
.10	PR	Pair
.11	D/A	Double Acting
.12	O/S	Opposite Swing
.13	D/E	Double Egress
.14	DR	Door
.15	FR	Frame
.16	HM	Hollow Metal
.17	AL	Aluminum
.18	PS	Pressed Steel
.19	P/LAM	Plastic Laminate
.20	KAL	Kalamein
.21	HMD	Hollow Metal Door
.22	HMF	Hollow Metal Frame
.23	CIF	Channel Iron Frame
.24	PSF	Pressed Steel Frame
.25	WD	Wood
.26	WD/DR	Wood Door
.27	WD/FR	Wood Frame
.28	CYL	Cylinder
.29	H/O	Hold Open
.30	O/H	Overhead
.31	U/C	Undercut
.32	B/S	Back Set
.33	NRP	Not Removable Pin
.34	TB	Thru Bolts
.35	CTB	Countersunk Thru Bolts

.36	TMS	Template Machine Screws
.37	MS	Machine Screws
.38	STS	Self Tapping Screws
.39	WS/LS	Wood Screws & Lead Shields
.40	TRR	Labeled for Temperature Rise Rating.
.41	A Label, 3 Hour Label or 180MFR	Labeled for 180 minutes (3 hour) Fire Protection Rating.
.42	B Label, 1-1/2 Hour Label or 90 MFR	Labeled for 90 minutes (1-1/2hour) Fire Protection Rating.
.43	C Label, 3/4 Hour Label or 45 MFR	Labeled for 45 minutes (3/4 hour) Fire Protection Rating.
.44	20 MIN Label or 20 MFR	Labeled for 20 minutes Fire Protection Rating.

PART - 3 EXECUTION

3.1 EXAMINATION

.1 Verification of Conditions: Examine doors, frames, related items and conditions under which work of this section is to be performed and identify conditions detrimental to proper and timely completion. Do not proceed until unsatisfactory conditions have been corrected.

.2 Confirm kickplate and threshold sizes before ordering.

3.2 INSTALLATION

.1 Install hardware to standard hardware location dimensions in accordance with Canadian Metric Guide to Steel Doors and Frames (Modular Construction) prepared by Canadian Steel Door and Frame Manufacturers' Association, except as otherwise indicated in this Section and elsewhere in the Contract Document.

.2 Where door stop contacts door pulls, mount stop to strike bottom of pull.

.3 Barrier Free Access: Mount all hardware in full conformity with authorities having jurisdiction. Confirm mounting heights with Consultant prior to commencement of frame and door preparation.

.4 Install all miscellaneous hardware as shown on details and specified.

.5 Do not use wall stops on gypsum board, demountable or moveable partitions.

.6 Mineral core doors: Pre-drill 3 mm diameter pilot holes for all hardware items. Manual turn fasteners into pilot holes. If installer does not follow this method, it may void door manufacturer warranty.

.7 Provide even margins between doors and jambs and doors and flooring and/or thresholds as follows:

.1 Hinge side: 1.6 mm.

.2 Latchside and head: 1.6 mm.

.3 Flooring and/or thresholds: 12 mm.

.4 Flooring, fire rated assemblies: 6 mm.

3.3 **HARDWARE MOUNTING HEIGHTS**

.1 Install and mount hardware as follows:

.1 Door knobs and lever: 965 mm centre line from finish floor

.2 Deadlock cylinder: 1370 mm centre line from finish floor

.3 Deadlatch cylinders: 1370 mm centre line from finish floor

.4 Door pulls: 1069 mm centre line from finish floor

.5 Push plates: 1090 mm centre line from finish floor

.6 Push bars: 1069 mm centre line from finish floor

.7 Top hinges: 125 mm down from top of door to top of hinge

.8 Bottom hinges: 250 mm up from finish floor to bottom of hinge

.9 Intermediate hinges: equally spaced between top and bottom hinges

.10 Floor stops: maximum 150 mm from lock edge when door is in fully open position

.11 Exit devices: to manufacturer's instructions

.12 Kickplates: maximum 3 mm from bottom of door to bottom of kickplate

3.4 **ADJUSTING AND CLEANING**

.1 Clean hardware with materials and methods as recommended by hardware manufacturer. Repair or replace defective hardware.

.2 Remove protective material where present.

.3 Adjust operable parts for correct function.

.4 Upon completion and verification of performance of installation, remove surplus materials, excess materials, rubbish, tools and equipment.

END OF SECTION

DOOR HARDWARE

08 71 00

PROJECT: SickKids

SickKids SPECT CT **(HS1024-0175)**

555 UNIVERSITY AVENUE, LEVEL 2
TORONTO, ON
M5G1X8

ARCHITECT: NORR

175 Bloor Street E.
North Tower, 15th Floor
Toronto, ON
M4W 3R8

Prepared By: Chad Connors
Date: February 28, 2025
Revised: September 11, 2025
September 30, 2025

Issued for Tender Permit – Oct. 1, 2025

Architectural Hardware Finishes

	Steel	Stainless Steel	Brass/Bronze	Aluminum	Paint/Powder Coat	US/CAN
Clear Anodized				628	689	US28
Satin Nickel	646		619	670		US15
Polished Nickel	645		618	669		US14
Satin Stainless Steel		630				US32D
Polished Stainless Steel		629				US32
Satin Chrome	652		626	702		US26D
Polished Chrome	651		625	672		US26
Satin Brass	633		606	667	678	US4
Polished Brass	632		605	666	677	US5
Satin Bronze	639		612	668	680	US10
Oil Rubbed Bronze	640		613	703	695	US10B
Flat Black / Anodized Black	631		622	671	693	US19

Door Handing's

Abbreviations

RH = Right Hand	RHA = Right Hand Active	SS = Single Slider
LH = Left Hand	LHA = Left Hand Active	BP = Bi-Parting Slider
RHR = Right Hand Reverse	RHA/LHA = Right & Left Hands Active	BF = Bi-Folding Slider
LHR = Left Hand Reverse	RHRA/LHRA = Right & Left Hand Reverse Active	TS = Telescopic Slider
RHRA = Right Hand Reverse Active	DA = Double Acting	PKT = Pocket Slider
LHRA = Left Hand Reverse Active	DE = Double Egress	

NOTE: The handing of a swing door is determined by placing yourself on the secured or keyed side of the door.

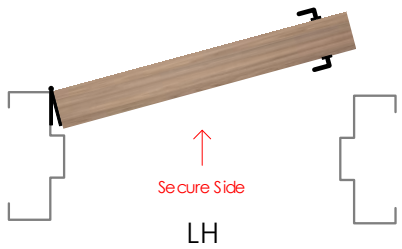

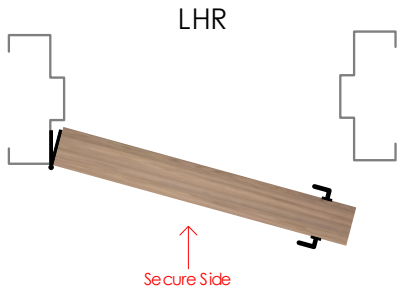

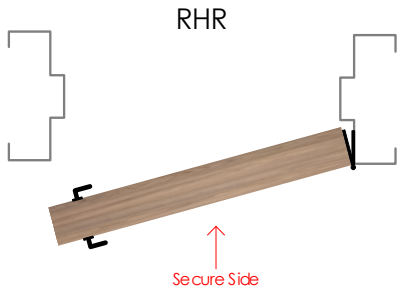

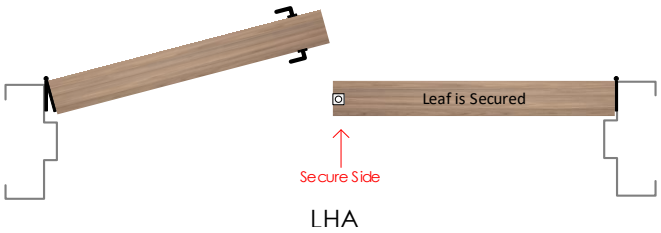

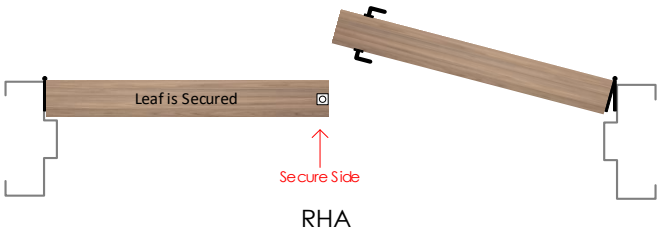

RHRA

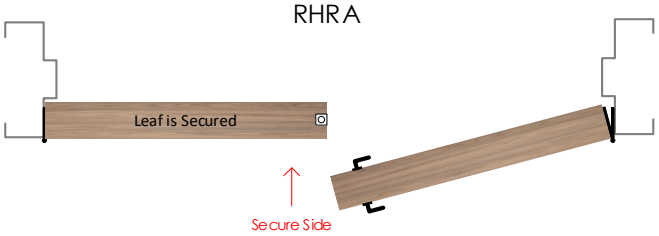

LHRA

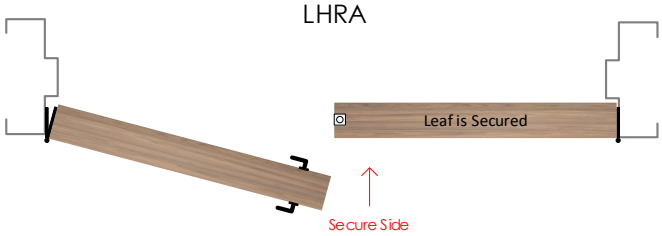

LHRA/RHRA

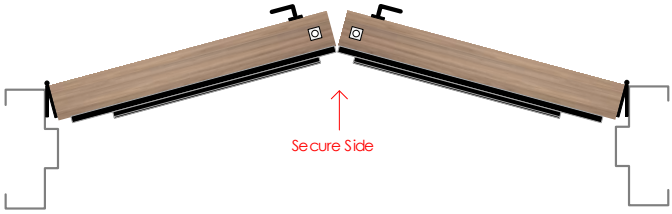

LHA/RHA

DA – Double Acting

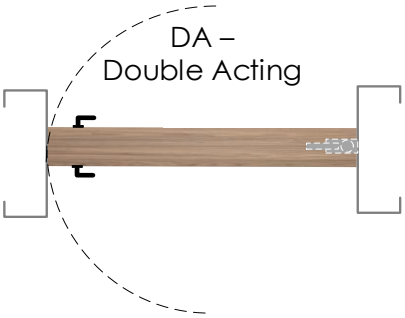

DE- Double Egress

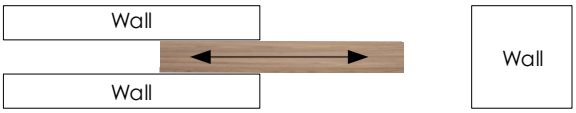

PKT- Pocket Door

SS- Single Sliding Door

BP- Bi Parting Sliding Door

BPS- Bi Passing Sliding Door

Products & Alternatives

NOTE: Only those products / brands listed here are acceptable and should be used to form a bid price. No unsolicited products will be considered. If acceptable alternates are listed here those too can be used to form a bid price provided, they are exactly the same as the specified item. If using an alternate product to form a price it is the bidder's responsibility to ensure that product is identical in every way to the specified item. If no alternates are listed, no alternate products are acceptable.

Product Type	Product#	Manufacturer	Alternate Manufacturer 1	Alternate Manufacturer 2
Continuous Hinge	SL24	Select	Ives	Best
Automatic Flush Bolt	F7940/FB	Standard Metal	Ives	Hager
Mortise Locks	8200 Series	Sargent	N/A	N/A
Overhead Stops	1ADJ /6ADJ Series	Rixson	N/A	N/A
Coordinator	F7600	Standard Metal	CBH	Gallery
Closers	1431 / 351 Series	Sargent	N/A	N/A
Wall Stop	S120	Standard Metal	CBH	Gallery
Armour/Kick Plates	K10A & K10F	Standard Metal	CBH	Gallery
Door Edge Guard	K42F	Standard Metal	CBH	Gallery
Frame Guard	K51F	Standard Metal	CBH	Gallery
Gasketing	W-66	KN Crowder	Pemko	National Guard
Auto Door Bottom	CT-51	KN Crowder	Pemko	National Guard
Lead Lined Astragal	139SPLD	National Guard	N/A	N/A
Auto Door Operator	SW200i	Besam	Dormakaba	MFG
Actuator	CM-331	Camden	MFG	MFG
Relay	CX-33	Camden	MFG	MFG
Key Switch	CM-170	Camden	N/A	N/A
Electric Strike	1006	HES		
Magnetic Lock	M680	Securitron		

Symbols

- Door has a fire rating and all associated hardware must have a fire label to suit. Must comply with local requirements.

- Door is automatic and is equipped with an auto operator. Door must meet local barrier free codes

- Door has an electrical requirement and requires power to be brought to the appropriate location above the door or to the latch, for either security or barrier free applications. Refer to security & electrical drawings for further information.

- Door requires security card access. Refer to security / electrical drawings for further information.

Abbreviations

Door:

HMD = Hollow Metal Door
IHMD = Insulated Hollow Metal Door
ALD = Aluminum Door
SSD = Stainless Steel Door
ISSD = Insulated Stainless Steel Frame
STL = Steel Door
IC-ALD = Insulated Clad Aluminum Door
SCWD = Solid Core Wood Door
HCWD = Hollow Core Wood Door
FGD = Frameless Glass Door
FRP = Fiberglass Reinforced Plastic Door
OHD = Overhead Door

Frame:

HMF = Hollow Metal Frame
ALF = Aluminum Frame
Cased Open HMF = Cased Open Hollow Metal Frame
SSF - Stainless Steel Frame
STL = Steel Frame
WDF = Wood Frame
Cased Open WDF = Cased Open Wood Frame
Cased Open Drywall = Cased Open Drywall

Fire Ratings:

0 HR – Zero Hour Fire Rating / Smoke Barrier
20 MIN – 20 Minute Fire Rating
¾ HR – 45 Minute Fire rating
1 ½ HR – 90 Minute Fire Rating
2 HR – 120 Minute Fire Rating
3 HR – 180 Minute Fire Rating

Disclaimer

Weblinks:
Weblinks do change from time to time as manufacturers move around their websites, please inform us if you have a none functioning weblink.

HARDWARE SCHEDULE

Heading# 1

Opening Information					
Opening Type:	Single	**Opening Size:**	915 x 2135 x 45	**STC Rating**	None
Door Material:	SCWD	**Frame Material:**	HMF	**Fire Rating**	None

1	**Total Openings**							
1	**Door#**	D2139	**Location:**	SPEC CT 2140	From	Bell Rm. 2139	**Handing:**	LHR

By Hardware Supplier					
1	Continuous Hinge	SL24HD x 2108 x TIPIT	630 / US32D / Satin Stainless Steel	Select	
1	Mortise Classroom Lockset	LC-8204 LNJ	630 / US32D / Satin Stainless Steel	Sargent	
1	LFIC Mortise Cylinder Housing	32-0275	626 / US26D / Satin Chrome	Medeco	
1	LFIC Construction Core	320201CC BI R1	626 / US26D / Satin Chrome	Medeco	
1	LFIC Permanent Core	320201	626 / US26D / Satin Chrome	Medeco	
1	Adjustable Collar	CP-160180-26	626 / US26D / Satin Chrome	Medeco	
1	Overhead Stop	1ADJ-336	689 / US28 / Painted Aluminum	Rixson	
1	Door Closer	351-P10	689 / US28 / Painted Aluminum	Sargent	
1	Kick Plate	K10A 203 x 877 x Tape	630 / US32D / Satin Stainless Steel	Standard Metal	
1	Smoke / Sound Seal	W-66 x 5185	Black	KN Crowder	

End of Heading

Fire Rated | Electrical | Card Access | Barrier Free

Heading# 2

Opening Information					
Opening Type:	Pair	**Opening Size:**	1 – 965 & 1 – 560 x 2135 x 45 (lead lined)	**STC Rating**	STC 50
Door Material:	SCWD	**Frame Material:**	HMF	**Fire Rating**	1 1/2 HR

1	**Total Openings**							
1	**Door#**	D2140a	**Location:**	Corridor 2100A	To	SPEC CT 2140	**Handing:**	LHA

By Hardware Supplier					
2	Continuous Hinge	SL24HDLL x 2108 x TIPIT (Rivnuts)	630 / US32D / Satin Stainless Steel	Select	
1	Auto Flush Bolt Set	F7940/FB	630 / US32D / Satin Stainless Steel	Standard Metal	
1	Passage Set	74-8215 LNJ	630 / US32D / Satin Stainless Steel	Sargent	
1	Electric Strike	1006CS	630 / US32D / Satin Stainless Steel	HES	
1	Magnetic Lock	M680E-BD	630 / US32D / Satin Stainless Steel	Securitron	
1	Coordinator / Filler Bar	F7660	600 / USP / Primed	Standard Metal	
1	Overhead Stop	6ADJ-336	689 / US28 / Painted Aluminum	Rixson	
1	Door Closer	1431-O	689 / US28 / Painted Aluminum	Sargent	
2	Armour Plate	K10F 864 x 895 x Tape	630 / US32D / Satin Stainless Steel	Standard Metal	
2	Armour Plate	K10F 864 x 490 x Tape	630 / US32D / Satin Stainless Steel	Standard Metal	
2	Door Edge Guard	K42F x 2134 x Tape (size to suit door height)	630 / US32D / Satin Stainless Steel	Standard Metal	
2	Frame Guard	K51F x 1220 x Tape (width to suit jamb profile)	630 / US32D / Satin Stainless Steel	Standard Metal	
1	Wall Stop	S120	630 / US32D / Satin Stainless Steel	Standard Metal	
1	Smoke / Sound Seal	W-66 x 5795	Black	KN Crowder	
1	Auto Door Bottom	CT-51 x 965	719 Milled Aluminum	KN Crowder	
1	Auto Door Bottom	CT-51 x 560	719 Milled Aluminum	KN Crowder	
1	Lead Lined Astragal	139SPLD x 2135	628 / US28 / Clear Anodized	National Guard	
By Automatic Operator Supplier					
1	Auto Door Operator	SW200i	628 / US28 / Clear Anodized	Besam	

2	Actuator	CM-331/42R-SGLR	630 / US32D / Satin Stainless Steel	Camden	
1	Relay	CX-33		Camden	
By Security Supplier					
1	Intercom	By Security Provider		MFG	
1	Card Reader	By Security Provider		MFG	
2	Door Contact	By Security Provider		MFG	
1	Push to Lock Button	By Security Provider		MFG	
1	Push to Unlock Button	By Security Provider		MFG	
1	Pull Station	By Security Provider		MFG	
1	Power Supply	By Security Provider		MFG	
1	Access Controller	By Security Provider		MFG	

Notes:

- 120VAC is required at the head of the door for all barrier free door operators, 15A dedicated circuit. Wall/Frame must be reinforced for automatic operator mounting, all conduit and back boxes for actuators, emergency call kits, and washroom locking kits with pull cords are to be provided by the electrical contractor.
- Electrician to confirm wire locations with auto door operator supplier prior to pulling wires.
- Final commissioning of all access control items, such as but not limited to electric strikes, request to exit sensors, door contacts & relays is the responsibility of the security provider.
- Magnetic lock to be tied to the fire alarm.

Method of Operation:

Ingress: Valid card authorization releases the magnetic lock and electric strike allowing ingress. Alternatively, the actuator can engage the auto door operator after valid card authorization has released the magnetic lock and electric strike. The 'Push to Lock' button inside the room disables the card reader to prevent entry during procedure.

Egress: The 'Push to Unlock' button releases the magnetic lock allowing egress and re-activates the card reader. The magnetic lock will release on power failure or fire alarm activation. In the event of an emergency the pull station will release the magnetic lock.

End of Heading

Heading# 3

Opening Information					
Opening Type:	Single	**Opening Size:**	965 x 2135 x 45 (lead lined)	**STC Rating**	STC 50
Door Material:	SCWD	**Frame Material:**	HMF	**Fire Rating**	None

1	**Total Openings**							
1	**Door#**	D2140b	**Location:**	SPEC CT 2140	From	Control Room 2141	**Handing:**	RHR

By Hardware Supplier					
1	Continuous Hinge	SL24HDLL x 2108 x TIPIT (Rivnuts)	630 / US32D / Satin Stainless Steel	Select	
1	Mortise Classroom Lockset	LC-74-8237 LNJ	630 / US32D / Satin Stainless Steel	Sargent	
1	LFIC Mortise Cylinder Housing	32-0275	626 / US26D / Satin Chrome	Medeco	
1	LFIC Construction Core	320201CC BI R1	626 / US26D / Satin Chrome	Medeco	
1	LFIC Permanent Core	320201	626 / US26D / Satin Chrome	Medeco	
1	Adjustable Collar	CP-160180-26	626 / US26D / Satin Chrome	Medeco	
1	Overhead Stop	1ADJ-336	689 / US28 / Painted Aluminum	Rixson	
1	Door Closer	351-P10	689 / US28 / Painted Aluminum	Sargent	
2	Armour Plate	K10A 864 x 895 x Tape	630 / US32D / Satin Stainless Steel	Standard Metal	
1	Door Edge Guard	K42 x 2134 x Tape (size to suit door height)	630 / US32D / Satin Stainless Steel	Standard Metal	
2	Frame Guard	K51 x 1220 x Tape (width to suit jamb profile)	630 / US32D / Satin Stainless Steel	Standard Metal	
1	Smoke / Sound Seal	W-66 x 5235	Black	KN Crowder	
1	Auto Door Bottom	CT-51 x 965	719 Milled Aluminum	KN Crowder	
By Security Supplier					
1	Intercom	By Security Provider		MFG	

End of Heading

Electrical

Heading# 4

Opening Information					
Opening Type:	Single	**Opening Size:**	965 x 2135 x 45 (existing door & frame)	**STC Rating**	STC 50
Door Material:	SCWD	**Frame Material:**	HMF	**Fire Rating**	1 1/2 HR

1	**Total Openings**							
1	**Door#**	D2141	**Location:**	Corridor 2100A	To	Control Room 2141	**Handing:**	RH

By Hardware Supplier					
		Re-use existing door hardware			
By Security Supplier					
1	Intercom	By Security Provider		MFG	

Notes:

- Final commissioning of all access control items, such as but not limited to electric strikes, request to exit sensors, door contacts & relays is the responsibility of the security provider.

End of Heading

Fire Rated

Heading# 5

Opening Information					
Opening Type:	Single	**Opening Size:**	965 x 2135 x 45	**STC Rating**	STC 55
Door Material:	HMD	**Frame Material:**	HMF	**Fire Rating**	3/4 HR

1	**Total Openings**							
1	**Door#**	D2138	**Location:**	Office 2107C	To	Office 2138	**Handing:**	LH

By Hardware Supplier					
1	Continuous Hinge	SL24HD x 2108 x TIPIT	630 / US32D / Satin Stainless Steel	Select	
1	Mortise Storeroom Lockset	LC-8204 LNJ	630 / US32D / Satin Stainless Steel	Sargent	
1	LFIC Mortise Cylinder Housing	32-0275	626 / US26D / Satin Chrome	Medeco	
1	LFIC Construction Core	320201CC BI R1	626 / US26D / Satin Chrome	Medeco	
1	LFIC Permanent Core	320201	626 / US26D / Satin Chrome	Medeco	
1	Adjustable Collar	CP-160180-26	626 / US26D / Satin Chrome	Medeco	
1	Overhead Stop	6ADJ-336	689 / US28 / Painted Aluminum	Rixson	
1	Door Closer	1431-O	689 / US28 / Painted Aluminum	Sargent	
1	Kick Plate	K10A 203 x 927 x Tape	630 / US32D / Satin Stainless Steel	Standard Metal	
1	Smoke / Sound Seal	W-66 x 5235	Black	KN Crowder	
1	Auto Door Bottom	CT-51 x 965	719 Milled Aluminum	KN Crowder	

End of Heading

PART - 1 GENERAL

1.1 SUMMARY

.1 Section Includes:

.1 Labour, Products, equipment, and services necessary to complete the work of this Section.

.2 This Section includes glazing work not specified in other Sections. Refer to other Sections for other glazing.

.2 Related Requirements

.1 Comply with Conditions of the Contract and Division 01 - General Requirements.

1.2 SUBMITTALS

.1 Shop drawings:

.1 Submit shop drawings indicating manufacturing and installation details.

.2 Product Data: Submit manufacturer's product specifications, including the PVB interlayer products. Include documentation of compliance with specified requirements, referenced tests, and compatibility of all products in contact with glazing.

.1 Provide Installer signed letter listing all products to be used, with signed letters from each glass, sealant, glazing tape, and blocking manufacturer certifying their compatibility.

.2 Provide a sample warranty and instructions for handling, storing, installing, cleaning, and protecting each type of glass and glazing material.

.3 Samples:

.1 Submit samples for each type of glass and of glazing materials identifying quality and type of glass if required by the Consultant before commencing work.

.2 Ensure samples are clearly labelled with manufacturer's name and type.

.4 Certificates:

.1 Submit manufacturer's certification compatibility of glass and glazing materials.

.5 Test Results:

.1 Provide test results in accordance with ASTM C1087 and ASTM C794 showing compatibility of applied sealants with accessories used in butt-joint glazing systems and determine strength, ability of cured sealant to maintain a bond to substrate under severe conditions and characteristics of peel properties of a cured-in-place elastomeric joint sealants for use in butt-joint glazing. Provide a statement and test data confirming sealant used in design indicated to accommodate design load requirements without failure.

.6 Operations and Maintenance Manual: Information on cleaning, maintenance, and replacement of all types of glass or glazing products shall be included in the Operations and Maintenance Manual.

1.3 QUALITY ASSURANCE

.1 Installer Qualifications: Glazier shall have minimum five (5) years' experience in the successful installation of glazing products similar to those specified for this Project.

.2 Glazing Installation Standard: Comply with recommendations of the GANA (Glass Association of North America), "Glazing Manual" and "Glazing Sealing Systems Manual" except where more stringent requirements are called for by manufacturers or these specifications. Refer to GANA for definitions of glass and glazing terms not otherwise defined.

.3 Safety Glazing Standard: Where safety glass is indicated or required by authorities having jurisdiction, provide type of products indicated which comply with OBC, ANSI Z97.1, and requirements of CPSC 16 CFR Part 1201 for category II materials.

.4 Single Source Responsibility: Provide materials obtained from one source for each type of glass and glazing product indicated, and for visually related areas.

.5 Pre-installation Conference: at least two weeks prior to commencing work of this Section, arrange for manufacturer's technical representative to visit the site and review preparatory and installation procedures to be followed, conditions under which the work will be done, and inspect the surfaces to receive the work of this Section. Advise the Consultant of the date and time of the meeting.

.6 Manufacturer’s site inspection: Have the manufacturer’s technical representative inspect the Work at suitable intervals during application and at conclusion of the work of this Section, to ensure the Work is correctly installed. When requested, submit manufacturer’s inspection reports and verification that the work of this Section is correctly installed.

1.4 **DELIVERY, STORAGE AND HANDLING**

.1 Handle and store materials and products in accordance with manufacturer's recommendations. Deliver and store packaged materials and products in original, undamaged containers with manufacturer's labels and seals intact.

PART - 2 PRODUCTS

2.1 **PERFOMANCE/DESIGN CRITERIA**

.1 Glass Strength:

.1 Provide glass products in the thickness and strengths required to meet or exceed the following criteria based on project loads and in-service conditions.

.2 Minimum thickness of annealed or heat-treated glass products to be selected so the worst case probability of failure does not exceed the following:

.1 8 breaks per 1000 for glass installed vertically less than 15 degrees from the vertical plane and under wind action.

.2 5 breaks per 1000 for heat soaked tempered glass as a result of verifiable NiS inclusion.

.3 1 break per 1000 for glass installed 15 degrees or more from the vertical plane and under action of wind and/or snow.

.3 Glass at guards, balustrades, and where glass is likely to be subjected to human impact shall comply with safety glass requirements of CAN/CGSB 12.20 and CAN/CGSB 12.1, and building code.

.4 Provide annealed, heat strengthened, and tempered lights where required by the building code.

.5 Glass thicknesses and glass types specified, indicated, or scheduled in the Contract Documents are minimums required. Glass designer/engineer to modify as required to satisfy design and building code requirements, and requirements of authorities having jurisdiction, and any such modifications shall be clearly indicated on shop drawings.

.2 Glazing systems shall be capable of withstanding normal thermal movements, wind loads and impact loads, without failure, including loss due to defective manufacture, fabrication and installation; deterioration of glazing materials; and other defects in construction.

.3 Protect laminated glass interlayer from damage or discolouration resulting from contact with deleterious and incompatible sealants, substances, and materials. Comply with manufacturer's recommended installation instructions.

2.2 **GLASS**

.1 Float glass (GL-F): CAN/CGSB-12.3, glazing quality polished.

.2 Tempered Safety Glass (GL-T):

.1 ASTM C1048, Kind FT (fully tempered), Condition A (uncoated surfaces), Type I (transparent glass, flat), Class 1 (clear), Quality q3 (glazing select), and meeting requirements of ANSI Z97.1, tong and roller marks free, minimum thickness 6 mm.

.2 Ensure surface compression is equal to or greater than 68.9 MPa (10 000 psi)

.3 Tempered glass material to come from one tempering furnace and be tempered to minimize distortion variance.

.1 Roller-wave distortion not to exceed 0.127 mm (0.005") from peak to valley.

.2 Maximum peak to valley roller-wave 0.8 mm (0.003") in the central area and 0.20 mm (0.008") within 267 mm (10.5") of the leading and trailing edge.

.3 Maximum bow and warp 0.79 mm per lineal 305 mm (1/32" per lineal foot).

.3 Laminated safety glass (GL-L): CAN/CGSB-12.1, Type 1, Class B, fabricated with minimum 1.6 mm clear polyvinylbutyral interlayer between 2 lites of 3 mm thick glass, minimum overall 7.6 mm thick.

.4 Laminated Tempered safety glass (GL-LT): transparent laminated tempered glass conforming to ASTM C1172, Kind LT, and meeting requirements of ANSI Z97.1, with two or more lites of flat glass, all of which are tempered safety glass (GL-T) as specified above and bonded by minimum 1.6 mm clear polyvinylbutyral interlayer.

.5 Plastic Film (FLM): flexible polyester material with acrylic, pressure sensitive, permanent adhesive.

.1 Fire Classification: Class A.

.2 Types and applications: as indicated in Section 09 06 00 Finishes Schedule.

2.3 **FIRE PROTECTION RATED GLASS**

.1 Fire-rated glass, non-impact rated, non-wired:

.1 Monolithic ceramic glazing:

.1 Fire rated, clear ceramic glazing material for use in non-impact safety-rated locations, not functioning as a barrier to heat.

.2 Fire-ratings: as indicated or scheduled, from 20 minutes to 90 minutes with hose stream test.

.3 Surface finish:

.1 Premium Grade: clear glass, polished for superior optical clarity.

.4 Basis of Design: Technical Glass Products 'FireLite'.

.2 Fire rated, impact safety resistant glass, non-wired:

.1 Film-faced ceramic glazing:

.1 Fire-rated and impact safety-rated, clear ceramic glazing material with surface applied impact safety film, and listed for use in doors, sidelites, transoms, and borrowed lites in both interior and exterior applications, not functioning as a barrier to heat.

.2 Fire-ratings: as indicated or scheduled, from 20 minutes to 90 minutes, 3 hours in doors where applicable, with hose stream test.

.3 Impact Safety Resistance: ANSI Z97.1-2009 and CPSC 16 CFR 1201 (Cat. I and II).

.4 Surface finish:

.1 Premium Grade: clear glass, polished for superior optical clarity.

.5 Basis of Design: Technical Glass Products 'FireLite Plus'.

2.4 **GLAZING MATERIALS**

.1 General - Glazing materials (fire-rated and non-fire-rated): Select glazing sealants, tapes, gaskets, and additional glazing materials of proven compatibility with other materials they will contact, including glass products, seals of insulating glass units and glazing channel substrates, under conditions of installation and service, as demonstrated by testing and field experience.

.2 Shims, spacers and setting blocks: 45, 70 and 90 Durometer A hardness plus/minus 5 respectively, neoprene rubber, resistant to oxidation and permanent deformation under load.

.3 Glazing gaskets: Extruded neoprene or EPDM of approved profile. Tensile strength of 7300 kPa; Durometer A hardness of 50 plus/minus 5; 25% maximum permanent set; 300 % minimum elongation at break; and resistant to ozone, showing no cracks.

.4 All glazing materials, products, primers, and cleaning solvents: Mutually compatible.

.5 Colours for glazing materials: As selected later and not necessarily standard colours.

2.5 **FABRICATION**

.1 Accurately size glass to fit openings allowing clearances recommended by the Flat Glass Marketing Association. Cut glass clean and free of nicks and damaged edges. Grind smooth and polish exposed glass edges. Do not cut or abrade tempered, heat treated, or coated glass.

.2 Take field measurements and levels required to verify and supplement those shown on the Drawings for the proper layout and installation of the work. Co-ordinate dimensional tolerances in adjacent building elements and confirm prior to commencement of work.

.3 Sandblast glass at depth recommended by the glass manufacturer and to patterns indicated. Do not weaken glass by sandblasting. Apply protective coating.

PART - 3 EXECUTION

3.1 INSPECTION

.1 Verify dimensions at the site before proceeding with fabrication or glazing units.

.2 Ensure that openings are free from distortion, and that surfaces are free from protrusions that will obstruct face and edge clearances.

.3 Ensure that wood is sealed; ferrous metals are painted, or zinc coated; and that surfaces are suitable for adhesion of the glazing materials.

.4 Ensure that movable units to be glazed are adjusted for proper operation.

.5 Ensure that surfaces to receive mirrors are sealed.

.6 Ensure that ambient and surface temperatures are above 5 degree C.

3.2 PREPARATION

.1 Inspect hollow metal and other glass framing for compliance with manufacturing and installation tolerances, including those for size, squareness, offsets at corners, existence of minimum required face or edge clearances, and effective sealing of joinery.

.2 Provide written report listing conditions detrimental to performance of glazing work.

.3 Do not perform glazing work prior to correction of unsatisfactory conditions. Commencement of installation indicates Installer's acceptance of substrate.

.4 Ensure rabbets, stops and glass edges are free of dust, dirt, moisture, oil and other foreign matter detrimental to, or obstructing the glazing material.

.5 Clean contact surfaces with solvent and apply primers to surfaces to receive tapes and sealants in accordance with the manufacturer's instructions. Ensure surfaces are free of moisture and frost.

.6 Immediately before glazing clean glazing channels and other framing members to receive glass.

.1 Remove coatings which are not firmly bonded to substrates.

.2 Promptly complete glazing both sides of a lite once started, to prevent re-entry of dust and dirt in glazing channels.

.7 Clean surfaces thoroughly prior to installation of films. Prepare surfaces using the methods recommended by the film’s manufacturer for achieving the best result for the substrate under the project conditions.

3.3 INSTALLATION - GENERAL

.1 Handle and install glass in accordance with manufacturer's directions. Prevent nicks, abrasions, and other damage likely to develop stress on edges.

.2 Remove and replace glazing stops in original locations, using original fasteners, securely set and undamaged.

.3 Use setting blocks and spacers as required to properly support the glass, centred in place in the glazing space independent of the materials and to uniformly distribute its load.

.4 Use a minimum of 2 setting blocks, located at the quarter points. Locate spacers at jamb edges of glass, uniformly spaced at 600 mm o.c. maximum, and 300 mm maximum from top and bottom.

.5 Assess coloured glass units for colour uniformity and arrange to avoid abrupt variation in appearance.

.6 Set glass properly centred with uniform bite and face and edge clearance, free from twist, warp, or other distortion likely to develop stress.

.7 Leave labels on glass until it has been set and inspected and approved. Leave glass whole and without cracks, scratches, or other defects and with setting in perfect condition at completion, to the approval of the Consultant.

.8 Remove rejected, broken or damaged glass due to defective materials or improper setting and replace with perfect materials. Units producing distorted vision will be rejected and replaced at the reasonable discretion of the Consultant.

3.4 **INTERIOR GLAZING**

.1 Unless otherwise specified, all interior glazing shall be dry glazing.

.2 Provide glazing gasket around entire perimeter of glass. Make tight butt joint at corners of lights. Place setting blocks at sill and spacers at both jambs as required to centre the unit in the frame. Place the unit into the frames and apply the stops against the gaskets. Tighten the screws or clips to obtain positive uniform pressure avoiding excessive pressure.

.3 Ensure rattle-free cushioning.

.4 Remove non-permanent labels promptly after installation and promptly clean adhesive and other residue from both surfaces of all glass.

3.5 **PROTECTION AND CLEANING**

.1 Protect glass from contact with contaminating substances resulting from construction operations or cleaning of adjacent materials.

.2 Remove and replace glass which is broken, chipped, cracked, abraded, scratched, or damaged in other ways during the construction period, including natural causes, accidents and vandalism.

.3 Clean glass on both faces not more than 4 days prior to date scheduled for inspections intended to establish date of Substantial Performance in each area of project. Clean glass by method recommended by glass manufacturer.

.4 Clean and make good to the approval of the Consultant, surfaces soiled or otherwise damaged in connection with the work of this Section. Pay the cost of replacing finishes or materials that cannot be satisfactorily cleaned.

.5 Upon completion of the work, remove all debris, equipment and excess material resulting from the work of this Section from the site.

END OF SECTION

NOTE: The application / location for the materials indicated is not limited to the list below and is to be used in conjunction with and may be supplemented by, the Specifications, Schedules and Drawings. Refer to Specifications, Schedules and Drawings for full extent of material application and additional material types.

CODE	ITEM	DESCRIPTION	IMAGE
DIVISION 06 – WOOD, PLASTICS, AND COMPOSITES			
PLAM-1	Plastic Laminate	Manufacturer: Wilsonart or approved equivalent Product: New Age Oak Colour: 7938 Finish: Fine Velvet finish Location: Refer to Finish Plan	
PLAM-2	Plastic Laminate	Manufacturer: Formica or approved equivalent Product: Colour Core 2 Colour: New White, 7223 Finish: Natural Grain 9NG) Location: Refer to Finish Plan	
SSF-1	Solid Polymer Surface	Manufacturer: Wilsonart or approved equivalent Product: Corian Colour: New White, 7223, 12mm Finish: Natural Grain 9NG) Location: Countertop	
SSF-2	Solid Polymer Surface, wall	Manufacturer: Wilsonart or approved equivalent Product: Corian Colour: New White, 7223, 6mm Finish: Natural Grain 9NG) Location: backsplash	
MDP-1	Hardware door Pull	Manufacturer: Richilieu Product: Functional Steel Pull - 26 Product # BP263174 Finish: Brushed Nickel	

NOTE: The application / location for the materials indicated is not limited to the list below and is to be used in conjunction with and may be supplemented by, the Specifications, Schedules and Drawings. Refer to Specifications, Schedules and Drawings for full extent of material application and additional material types.

CODE	ITEM	DESCRIPTION	IMAGE
DIVISION 08 - OPENINGS			
FML-1	Film	Manufacturerer: 3m Film Product: Crystal	
DIVISION 09 – FINISHES			
RSF-1	Resilient Sheet Flooring	Manufacturer: Mondo Product: Harmoni, SD Color: HG481 Vellum Base: Flash Cove with Stainless Steel Cove Cap Location: Refer to finishes plan Adhesive: EP-55	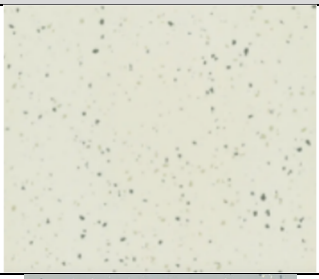
RSF-2	Resilient Sheet Flooring	Manufacturer: Mondo Product: Harmoni, SD Color: HG509 Blizzard Base: Flash Cove with Stainless Steel Cove Cap Location: Refer to finishes plan Adhesive: EP-55	
TEF-1	Troweled Epoxy Flooring	Manufacturer: Sika Quartzite Troweled System, 3mm product Provide grit sample	
RB-1	Rubber Base	Manufactuter: Roppe Product: 700 series Colour: to match existing area	

NOTE: The application / location for the materials indicated is not limited to the list below and is to be used in conjunction with and may be supplemented by, the Specifications, Schedules and Drawings. Refer to Specifications, Schedules and Drawings for full extent of material application and additional material types.

CODE	ITEM	DESCRIPTION	IMAGE
TS-1	Transition Strip	Manufacturer: Schluter Systems or approved equivalent Refer to drawings Location: Between Terrazzo and Rubber floor	
PT-14	Paint	Manufacturer: Benjamin Moore to match Pittsburgh Paint Product: Eco Spec Colour: Match existing Green colour PT-14 for SickKids Standards (Pittsburgh Paints Sentimental Lady) Y3 1x 4.5000 S1 1x 14.1250 G1 ox 13.9375 Finish: Pearl Location: to be confirmed based off graphic layout	
PT-16	Paint	Manufacturer: Benjamin Moore to match Pittsburgh Paint Colour: Match Pittsburgh Heavenly Blue) S1 0x 28.75 M1 0x 6.75 B1 1x2.0 Finish: Pearl Location: to be confirmed based off graphic location	
WP-1	Wall Graphic	All walls to be painted with PT-1 in preparation for Wall Graphic (WG-1) as supplied and installed by others.	

NOTE: The application / location for the materials indicated is not limited to the list below and is to be used in conjunction with and may be supplemented by, the Specifications, Schedules and Drawings. Refer to Specifications, Schedules and Drawings for full extent of material application and additional material types.

CODE	ITEM	DESCRIPTION	IMAGE
DIVISION 10 - SPECIALTIES			
CG-1	Corner Guard	Manufacturer: Construction Specialties Product: Acrovyn Corner Guards Model: SM-20N Colour: Mission white Shape: 90 degree corner Height: full height Size: 3” wing Location: Refer to Floor Finish Plan	
CG-2	Corner Guard, Stainless steel	Manufacturer: Construction Specialties Product: Stainless Steel corner guard Model: CO-8 Colour: Silver Shape: 90 degree corner , 16 gauge Height: full height Size: to match existing leg lenth Location: Refer to Floor Finish Plan	
WP-2	Protective Wall Covering	Manufacturer: Construction Specialties Product: Rigid Acrovyn Sheet 4000 Colour: 933 Mission White Finish: Suede Texture Thickness: 0.040” Height: 1200mm AFF (unless otherwise noted on drawings)	

NOTE: The application / location for the materials indicated is not limited to the list below and is to be used in conjunction with and may be supplemented by, the Specifications, Schedules and Drawings. Refer to Specifications, Schedules and Drawings for full extent of material application and additional material types.

CODE	ITEM	DESCRIPTION	IMAGE
WP-4	Protective Wall Covering	Manufacturer: Construction Specialties Product: Rigid Acrovyn Sheet 4000 Colour: 933 Mission White Finish: Suede Texture Thickness: 0.040” Height: 2200mm AFF (unless otherwise noted on drawings) *PTE-1 above	
BH-1	Transfer board hook	Manufacturer: Medicus Health or equivlient Product: Patient Transfer board universal mounting hanger Material : stainless steel	

End of Section

PART - 1 GENERAL

1.1 SUMMARY

.1 Section Includes: Labour, Products, equipment and services necessary to complete the work of this Section.

1.2 ACTION SUBMITTALS

.1 Product Data: Submit product data for each type of product.

.1 Submit manufacturer's instructions, printed product literature and data sheets for gypsum board assemblies and include product characteristics, performance criteria, physical size, finish and limitations.

.2 Fire-rated assembly listings:

.1 Submit fire-rated assembly listings for each required fire resistance rated assembly for work of this section.

.3 Samples: For the following products:

.1 Trim Accessories: Full size sample in 300 mm long length for each trim accessory indicated.

1.3 ADMINISTRATIVE REQUIREMENTS

.1 Pre-installation meeting:

.1 Two (2) weeks prior to commencing work of this Section, arrange for manufacturer's technical representative to visit the site and review preparatory and installation procedures to be followed, conditions under which the work will be done, and inspect the surfaces to receive the work of this Section.

.2 Establish a procedure to maintain optimum working conditions and to coordinate this work with related and adjacent work.

.3 Review products, conditions, and other performance requirements.

.4 Advise the Consultant of the date and time of the meeting.

1.4 QUALITY ASSURANCE

.1 Installer Qualifications: Subcontractor executing the work of this section shall have a minimum of 10 years continuous experience in successful installation of work of type and quality indicated and specified.

.2 Install work level to tolerance of 3 mm in 3000 mm.

.3 Select studs with maximum deflection of L/360 at lateral force of 240 Pa for maximum heights indicated.

.4 Fire test response characteristics: For gypsum board assemblies with fire-resistance ratings, provide materials and construction identical to those tested in assembly indicated according to ASTM E119 by an independent testing and inspecting agency acceptable to authorities having jurisdiction.

.5 Sound transmission characteristics: For gypsum board assemblies with STC ratings, provide materials and construction identical to those tested in assembly indicated according to ASTM E90 and classified according to ASTM E413 by a qualified independent testing agency.

1.5 **ENVIRONMENTAL REQUIREMENTS**

.1 When the outdoor temperature is less than 13°C ensure that heat is introduced in sufficient time, before work commences, to bring surrounding materials up to these temperatures; and maintained until materials installed by this Section have cured.

.2 Do not install paper-faced gypsum panels until installation areas are fully enclosed and conditioned.

.3 Maintain temperature between 10 degree C and 21 degree C both day and night, 24 hours before, during and after entire gypsum board joint finishing and until the permanent heating system is in operation or the building is occupied.

.4 Do not install work in any area unless satisfied that work in place has dried out, and that no further installation of damp materials is contemplated.

.5 Do not install panels that are wet, those that are moisture damaged, and those that are mold damaged.

.1 Indications that panels are wet or moisture damaged include, but are not limited to, discoloration, sagging, or irregular shape.

.2 Indications that panels are mold damaged include, but are not limited to, fuzzy or splotchy surface contamination and discoloration.

1.6 **DELIVERY, STORAGE, AND HANDLING**

.1 Deliver materials in original packages, containers, or bundles bearing brand name and identification of manufacturer or supplier.

.2 Store materials on the job site in their original packaging until ready for actual use.

.3 Store materials inside under cover and keep them dry and protected against damage from weather, direct sunlight, surface contamination, corrosion, construction traffic, and other causes. Stack gypsum panels flat to prevent sagging.

.4 Handle gypsum products with care to avoid damage.

.5 Do not store joint compounds for extended periods, as they are subject to aging.

PART - 2 PRODUCTS

2.1 **PERFORMANCE/DESIGN CRITERIA**

.1 Single source responsibility: Obtain gypsum board products from a single manufacturer, or from manufacturers recommended by the prime manufacturer of gypsum boards.

.2 Fire resistance rating: Where gypsum board systems with fire resistance ratings are indicated or required, provide materials and installations that are identical with those of applicable assemblies tested by fire testing laboratories acceptable to authorities having jurisdiction.

.3 Follow applicable requirements of ASTM C754 for installation of steel framing.

.4 Design system members to withstand own dead load, super-imposed dead loads, to maximum allowable deflection of L/240, without permanent deformation.

.5 Sheet metal thicknesses indicated herein pertains to the “minimum base steel thickness exclusive of coating”.

2.2 **MATERIALS**

.1 Products: Refer to Section 00 01 30, List of Materials for Products, manufacturer, designation and other requirements.

.2 Glass scrim interior gypsum board:

.1 Coated inorganic fiberglass mat-faced water-resistant treated gypsum board, non-combustible water and mould-resistant core encased in a moisture-resistant fiberglass mat on both sides, conforming to the physical properties of ASTM C1396/C1396M and ASTM C1177/C1177M; rating of 10 "No Mold Growth" as tested for 4 weeks according to ASTM D3273, fire rated where indicated.

.2 Acceptable Products: Georgia-Pacific “DensArmor Plus Fireguard and Fireguard C Interior Panel”, or equivalent by CGC.

.3 Impact resistant gypsum board:

.1 Mould and moisture resistant, glass scrim faced.

.2 Impact resistance performance:

.1 Surface abrasion surface damage: Level 3 to ASTM C1629.

.2 Surface indentation surface damage: Level 1 to ASTM D5420.

.3 Soft-body impact penetration: Level 3 to ASTM E695.

.4 Hard-body impact penetration: Level 2 to ASTM C1629.

.3 Thickness: 15.9 mm minimum, Type X.

.4 Tile backer board: ASTM C1178/C1178M, 12 mm thick, 1200 mm wide x maximum practical lengths, ends square cut, square edges, glass mat both sides, face side treated with heat-cured copolymer water and vapour resistant coating, Dens-Shield by G-P Gypsum Corporation or other acceptable equivalents.

.5 Cement board: Durock Cement Board by CGC Inc., PermaBase by Unifix Inc., Wonderboard by Roc-Crete Ltd., or Panaroc by Westroc Ltd.

.6 Column Covers: High density gypsum, reinforced with continuous filament glass fibre mat and structural reinforcing as required per ASTM C1381 and ASTM C1355.

.1 Glass Content: 5 to 6 percent by weight.

.2 Density: 100 to 115 pcf.

.3 Flammability:

.1 Flame Spread Index: 0 to ASTM E84 and ASTM E136.

.2 Smoke Development Index: 0 to ASTM E84 and ASTM E135.

.4 Impact Resistance: 8.0 ft.-lb./in^2 to ASTM D256.

.5 Product: Refer to Section 00 01 30, List of Materials.

.7 Steel studs: ASTM C645, minimum 0.46 mm base metal thickness, hot-dipped galvanized to ASTM A653/A653M G60 (Z180) zinc coating, roll formed, widths as indicated, with knock-out holes for mechanical and electrical services. Use 20 gauge studs for cement board and fiber reinforced panels.

.8 Floor and ceiling tracks (runners): ASTM C645, metal thickness to match studs, hot-dipped galvanized to ASTM A653/A653M G60 (Z180) zinc coating, roll formed, width to suit studs.

.1 For openings wider than 914 mm, provide 0.836 mm minimum thickness for header.

.9 Runner fasteners:

.1 To metal concrete inserts: Use 10 mm Type S-12 Pan Head screws.

.2 To suspended ceilings: Use prefinished clips to match ceiling grid, as manufactured by CGC or approved equivalent.

.10 Furring runners and channels: ASTM C645, minimum 0.46 mm base metal thickness, hot-dipped galvanized to ASTM A653/A653M G60 (Z180) zinc coating, roll formed.

.11 Resilient steel furring channels: ASTM C645, 12.7 mm x 65 mm, 0.46 mm base metal thickness, hot-dipped galvanized to ASTM A653/A653M G60 (Z180) zinc coating, roll formed; Hat shaped resilient furring channel for direct wall furring where resilient channels are indicated.

.12 Fasteners for furring members: Type and size recommended by furring manufacturer for substrate and application indicated.

.13 Channel bridging: 1.37 mm bare steel thickness, 38 mm deep with minimum 12.7 mm wide flange.

.14 Backing plate: Galvanized steel sheet for blocking and bracing in length and width indicated, minimum base metal 0.7 mm thick.

.1 Elimination of backer plates or direct attachment of accessories or equipment to studs will not be permitted.

.15 Attachment clips: Sized to suit acoustical ceiling grid members, complete with screws and other fastening system, Revoe Clips by Revoe Manufacturing Ltd.

.16 Hangers, tie wires, inserts, anchors: Manufacturer's standard.

.17 Insulating strip: Rubberized, moisture resistant 3 mm thick foam strip, 12 mm wide, with self-sticking adhesive on one face, lengths as required.

.18 Casing beads, corner beads: 0.48 mm hot dipped galvanized steel, perforated flanges, designed to be concealed with joint compound; one piece length per location.

.19 Reveal trims: Extruded 6063-T5 aluminum, designed to be concealed with joint compound, maximum lengths, reveal width and depth as indicated, Final Forms I 500 Series by Gordon Inc. or other approved equivalents.

.20 Acoustical sealant: Acoustical sealant by Tremco Ltd.

.21 Joint and laminating compounds: to ASTM C475, as recommended by gypsum board and tile backer board manufacturer, high bond, low shrinkage and asbestos-free.

.22 Joint tape: 50 mm wide reinforced tape.

.23 Acoustical insulation (Sound Attenuation Blankets): CAN/ULC-S702, mineral (glass and rock wool) fibre, flame spread and smoke developed in conformance with OBC requirements and other authorities having jurisdiction in accordance with CAN/ULC-S102. Non-combustible in accordance with requirements of CAN/ULC-S114. Sufficient thickness to meet required STC rating for sound-rated partitions and of width to suit metal framing spacing and other miscellaneous spacings.

.24 Acoustic putty pads: asbestos free gypsum based synthetic rubber moldable putty pad, 177.8 mm x 177.8 mm x 3 mm, non-conductive, of 1.6 kg/l density, tested to UL 263, in red colour, to match Hilti CP 617L Firestop Putty Pad by Hilti (Canada) Corp., for covering electrical boxes in acoustic partitions.

.25 Security mesh: ASTM A1011, security mesh of expanded carbon steel with nominal 19 mm openings, minimum 3.048 mm thick, Dramex Expanded Metal Corporation or other approved equivalents.”

PART - 3 EXECUTION

3.1 EXAMINATION

.1 Examine areas and substrates including welded hollow-metal frames and framing for compliance with requirements and other conditions affecting performance.

.2 Examine panels before installation. Reject panels that are wet, moisture damaged, and mold damaged. Remove rejected panels from site and replace with undamaged panels at no additional cost to the Owner.

.3 Do not proceed with installation until the building is completely enclosed and protected from exposure to the elements.

.4 Proceed with installation only after unsatisfactory conditions have been corrected.

3.2 INSTALLATION - GENERAL

.1 Comply with ASTM C754 and ASTM C840, Standard Specification for Application and Finishing of Gypsum Board.

3.3 INSTALLATION - PARTITION AND WALL FRAMING

.1 Align partition top and bottom tracks and secure by screws at 600 mm o.c. maximum.

.2 Place studs vertically at 400 mm oc, unless otherwise noted, and not more than 50 mm from abutting walls, and at each side of openings and corners. Position studs in top and bottom tracks.

.3 Screw attach end studs to top and bottom tracks. Screw attach intermediate studs to bottom tracks. Secure intermediate studs to top tracks by crimping or by other means of fastening acceptable to Consultant.

.4 Continuously cross brace steel studs at 1500 mm on centre to provide rigid installation to manufacturer's instructions.

.5 Maintain clearance under beams and structural slabs to avoid transmission of structural loads to studs.

.6 Provide two studs extending from floor to ceiling at each side of openings wider than stud centres specified. Secure studs together, 50 mm apart using clips or other approved means of fastening placed alongside frame anchor clips.

.7 Erect track at head of door/window openings and sills of sidelight/window openings to accommodate intermediate studs. Secure track to studs at each end, in accordance with manufacturer's instructions. Install intermediate studs above and below openings in same manner and spacing as wall studs.

.8 Frame openings and around built-in equipment, cabinets, access panels, on four sides. Extend framing into reveals. Check clearances with equipment suppliers.

.9 Provide stud, furring channel, and backing plates secured between studs for attachment of fixtures, electrical boxes, grab bars, washroom accessories, and other items. Comply with details indicated and with stud and gypsum board manufacturers' written recommendations.

.10 Terminate partitions at ceiling height except where indicated otherwise.

.11 Install continuous insulating strips to isolate studs from exterior window framing.

.12 Furr duct shafts, beams, columns, pipes and exposed services where indicated.

.13 Apply two continuous beads of acoustical sealant at junctions of metal framing and structure, including bottom and top tracks, where partitions abut fixed building components.

Fill junction completely and continuously from floor to ceiling, or to structure for full height partitions.

.14 Acoustic putty pads: Apply acoustic putty pads to the exterior of electrical boxes in acoustic partitions, completely sealing pads against the stud within the stud cavity and fitting around conduit and cables, in accordance with manufacturer's recommendations.

.15 Frame for gypsum board faced vertical bulkheads within and at termination of ceilings.

.16 Mechanically fasten resilient channels perpendicular to wall framing starting at 50 mm up from floor and end with 150 mm to the underside of structure at no more than 610 mm o.c. Install where indicated.

.17 Secure security mesh to each stud with #8 pan head type self tapping screws with minimum through penetration of 6 mm at maximum 200 mm o.c. and within 50 mm of mesh edge or secure mesh with 3 mm x 13 mm long fillet welds at maximum 200 mm o.c. and within 50 mm of mesh edge. Overlap joints by minimum 50 mm.

3.4 **INSTALLATION – ATTACHMENT CLIPS**

.1 Place attachment clips over acoustic ceiling main/cross tee from top. Line up pre-drilled hole on clip with hole on main/cross tee and screw clip to main/cross tee with 12.7 mm wafer screw.

.2 Screw through pre-drilled holes in attachment clip into top track of stud partition. Do not screw through ceiling grid.

.3 Do not damage ceiling grid system during installation of these clips.

3.5 **INSTALLATION - WALL FURRING**

.1 Space wall furring runners vertically at 600 mm o.c., and secure through alternate flanges of runners. Shim runners as required to present a true, plumb line for application of gypsum board.

.2 Locate furrings not more than 50 mm away from all openings, interior corners, intersections, frames, jambs, control joints and the like.

.3 At windows, doors or similar openings having returns, and around corners, install lengths of mitred and bent pieces of furring horizontally spaced approximately 600 mm o.c. Form mitres by cutting the flanges and bending the web. Do not cut web to form corners.

.4 Mechanically fasten resilient channel perpendicular to wall framing starting at 50 mm up from floor and end within 150 mm to the underside of structure, at no more than 600 mm o.c. Install where indicated.

3.6 **INSTALLATION - SUSPENDED CEILING FRAMING**

.1 Erect hangers and runner channels for suspended gypsum board ceilings in accordance with ASTM C840 except where specified otherwise.

.2 Provide additional ceiling suspension hangers within 150 mm of each corner and at maximum 600 mm around perimeter of light fixtures and diffusers.

.3 Furr above suspended ceilings for gypsum board fire and sound stops and to form plenum areas as indicated.

3.7 **INSTALLATION - GYPSUM PANELS**

.1 Do not apply gypsum panels until bucks, anchors, blocking, electrical and mechanical work are approved.

.2 Apply gypsum panels to furring or framing using screw fasteners, at 300 mm oc., and at closer spacings as required for fire resistance rated assemblies. Space fasteners in tile baker boards a maximum of 200 mm o.c.

.3 Install ceiling board panels across framing to minimize the number of abutting end joints and to avoid abutting end joints in the central area of each ceiling. Stagger abutting end joints of adjacent panels not less than one framing member.

.4 Install gypsum panels with face side out. Butt panels together for a light contact at edges and ends with not more than 1.6 mm of open space between panels. Do not force into place.

.5 Locate edge and end joints over supports, except in ceiling applications where intermediate supports or gypsum board back blocking is provided behind end joints. Do not place tapered edges against cut edges or ends. Stagger vertical joints on opposite sides of partitions. Do not make joints other than control joints at corners of framed openings.

.6 Attach gypsum panels to framing provided at openings and cutouts.

.7 Control Joints

.1 Prior to installation review exact locations of control joints with the Consultant. Install purpose made control joint metal trim at following locations:

.1 Where partition, wall, or ceiling traverses a construction joint (expansion, seismic, or building control element) in the base building structure.

.2 Furring or partition abuts a structural element or dissimilar wall or ceiling.

.3 Ceiling abuts a structural element, column or dissimilar wall, partition, or other vertical penetration.

.4 Construction changes within a partition or ceiling.

.5 Partition or furring runs exceeding 9100 mm and total area between control joints exceeding 84 m^2

.6 Partition and ceiling runs on column lines or at joints in ceiling runs.

.7 In interior ceilings without perimeter relief exceeding 9100 mm in either direction and total area between control joints exceeding 84 m^2

.8 In interior ceilings with perimeter relief exceeding 15000 mm and total area between control joints exceeding 230 m^2

.2 Install control joints full height floor to ceiling or door header to ceiling in partitions and furring runs.

.3 Install control joints from wall to wall in ceiling areas.

.8 Cover both faces of steel stud partition framing with gypsum panels in concealed spaces.

.1 Unless concealed application is indicated or required for sound, fire, air, or smoke ratings, coverage may be accomplished with scraps of not less than 0.7 sq.m. in area.

.2 Fit gypsum panels around ducts, pipes, and conduits.

.3 Where partitions intersect open joists and other structural members projecting below underside of slabs and decks, cut gypsum panels to fit profile formed by joists and other structural members; allow 6 mm to 10 mm wide joints to install sealant.

.9 Gypsum board single layer application:

.1 On ceilings, apply gypsum panels before wall/partition board application to the greatest extent possible and at right angles to framing, unless otherwise indicated.

.2 On partitions and walls, apply gypsum panels parallel to framing, unless otherwise indicated or required by fire resistance rated assembly, and minimize end joints.

.3 Stagger abutting end joints not less than one framing member in alternate courses of board.

.10 Gypsum board multilayer application - ceilings: Apply gypsum board indicated for base layers before applying base layers on partitions and walls; apply face layers in same sequence. Apply base layers at right angles to framing members and offset face layer joints one framing member, 400 mm minimum, from parallel base layer joints, unless otherwise indicated or required by fire resistance rated assembly.

.11 Gypsum board multilayer application – partitions and walls: Apply gypsum board indicated for base layers and face layers parallel to framing with joints of base layers located over stud or furring member and face-layer joints offset at least one stud or furring member with base-layer joints, unless otherwise indicated or required by fire-resistance-rated assembly. Stagger joints on opposite sides of partitions.

.1 Furring members: Apply base layer parallel to framing and face layer either vertically parallel or perpendicular to framing with vertical joints offset at least one furring member. Locate edge joints of base layer over furring members.

.12 Single layer fastening method: Fasten gypsum panels to supports with steel drill screws.

.13 Multilayer fastening method: Fasten base layers with screws; fasten face layers with adhesive and supplementary fasteners, unless otherwise indicated or required by fire resistance rated assembly.

.14 Laminating to substrate: Where gypsum panels are indicated as directly adhered to a substrate, comply with gypsum board manufacturer's written recommendations and temporarily brace or fasten gypsum panels until fastening adhesive has set.

.15 Tile backer board: Apply tile backer board where ceramic tile finish is scheduled. Comply with manufacturer's written installation instructions. Maintain 6 mm gap where panels abut other construction or penetrations.

3.8 INSTALLATION - CEMENT BOARD

.1 Fabricate and pre-cut cement board to required sizes and with necessary cutouts.

.2 Install cement board with edges centred on steel framing and joints staggered in adjacent rows. Fit ends and edges closely but do not force together.

.3 Install cement board fasteners at 150 mm o.c. with perimeter fasteners between 10 mm to 16 mm from ends and edges.

.4 Install cement board joint filler in accordance with cement board manufacturer's directions to produce watertight, filled joints without voids, cracks and excess joint filler.

3.9 INSTALLATION - ACOUSTICAL INSULATION

.1 Install acoustical insulation to partitions indicated. Provide continuous coverage between studs and run continuously from floor to ceiling, or to structure for full height partitions, over door frames and openings and around corners.

.2 Install acoustical insulation within induction units where partitions meet window mullions.

.3 Pack acoustical insulation around cut openings in gypsum board, behind outlet boxes around plumbing, heating or structural items passing through the system and at abutting walls.

.4 Secure acoustical insulation to one interior face of gypsum board with adhesive or mechanical fasteners or by other approved means.

.5 For partitions receiving acoustical insulation, seal construction at perimeters, behind control joints, and at openings and penetrations with a continuous bead of acoustical sealant. Install acoustical sealant at both faces of partitions at perimeters and through penetrations. Comply with ASTM C919, Standard Practice for Use of Sealants in Acoustical Applications, and with manufacturer's written recommendations for locating edge trim and closing off sound-flanking paths around or through assemblies, including sealing partitions above acoustical ceilings

3.10 **INSTALLATION - FIRE RATED ASSEMBLIES**

.1 Construct fire rated assemblies where indicated, to requirements of authorities having jurisdiction.

3.11 **INSTALLATION - ACCESSORIES**

.1 Erect casing beads, corner beads straight, plumb or level, rigid and at proper plane. Use full length pieces where practical. Make joints tight, accurately aligned and rigidly secured by screw fasteners. Fit corners accurately, free from rough edges.

.2 Provide corner beads at external corners of gypsum board partitions and where indicated.

.3 Provide casing beads at gypsum board terminations, at gypsum board wall/ceiling junctions, where gypsum board butts against surfaces having no trim concealing junction and where indicated.

.4 Construct control joints of two back-to-back casing beads set in gypsum board facing and supported independently on both sides of joint. Provide continuous polyethylene dust barrier behind and across control joints.

3.12 **INSTALLATION - ACCESS PANELS**

.1 Install access doors to electrical and mechanical fixtures specified in respective Sections.

.2 Rigidly secure frames to furring or framing systems.

3.13 **INSTALLATION - TAPING AND FILLING**

.1 Fill joints, casing beads, corner beads, screwholes and depressions on gypsum board surfaces exposed to view to provide smooth seamless surfaces and square neat corners.

.2 Apply joint compounds and reinforcing tapes in accordance with manufacturer's specifications.

.3 Fill joints and apply joint compounds by three-coat method. Apply cover coat 175 mm wide, level coat 250 mm wide, and skim coat 300 mm wide.

.4 Embed reinforcing tape in a cover coat of joint compound. Apply level coat of joint compound when cover coat has dried. Apply skim coat of compound when level coat has dried.

.5 Feather edges of compounds into surfaces of gypsum boards. After skim coat has dried for at least 24 hours sand to leave smooth for decoration. Do not sand paper face of gypsum board.

.6 At internal corners: First fill gaps between boards with joint compound. Imbed creased reinforcing tape into a thin coat of joint compound applied 50 mm wide at each side of

corner. Apply cover coat. Apply skim coat to one side of joint, and when dry apply skim coat to other side.

.7 At external corners: Fill to nose of corner bead with joint compound and sand smooth.

.8 At screwheads and nailheads: Fill holes and depressions with a two coat application of joint compound and sand smooth.

.9 Finish gypsum board joints above finished ceiling with tape and first coat of joint compound.

3.14 **EXISTING BASE BUILDING GYPSUM WALL PARTITIONS**

.1 All existing Base Building gypsum wall partitions mast be repaired, patched, taped, filled and sanded prior to receive new finishes.

.2 Patching and Repair:

.1 Gypsum panel product patch must be mechanically secured; attachment with joint compound material only is not acceptable. The patching material should be cut from gypsum panel product of a type and thickness equal to the original materials so that the patching material is in the same geometric shape as, but slightly larger than, the damaged area. The damaged area is then further enlarged to match exactly the size of the patching material. Restore thermal insulation, if present.

.2 Metal runner track is secured to the inside edges of the damaged area. The patching material is screw attached to the exposed face of the runner track with fasteners a maximum of 8 in. (200 mm) apart. The patch should be treated with tape and joint compound to restore appearance to Level 5 gypsum board finish, fire resistance qualities, and acoustical performance.

.1 Apply skim coat of topping or all-purpose drying-type compound over the entire wall where patching and repair was performed.

3.15 **INSTALLATION TOLERANCES**

.1 Provide and install studs, framing, shimming, and furring to provide proper support for gypsum board to achieve the following installation tolerances:

.1 Do not exceed 3 mm in 3 m variation from plumb, level, and plane.

.2 Do not exceed 10 mm from drawings locations.

.3 Do not exceed 1.5 mm variation between planes of abutting edges or ends.

.4 Install each framing member so fastening surfaces vary not more than 3.2 mm from the plane formed by faces of adjacent framing.

.2 Suspended and furred ceilings:

.1 Level cross furring channels to maximum tolerance of 3 mm in 3 m.

.3 Installation tolerances gypsum and tile backer board panels:

.1 Do not exceed 3 mm in 3 m variation from plumb, level, and plane in exposed surfaces, except at end joint between gypsum board panels.

.2 Do not exceed 10 mm from indicated location.

.3 Do not exceed 1.5 mm variation between planes of abutting edges or ends.

.4 Surface flatness shall not exceed 1.5 mm within 305 mm straight edge. For non-tapered-edge end joints between boards, measure flatness tolerance with end of straight end at centreline of joint.

.4 Installation tolerances accessories:

.1 Alignment with board panels shall not exceed tolerances specified above.

.2 End joints shall be flush aligned to maximum offset of 0.5 mm.

3.16 **PROTECTION**

.1 Protect adjacent surfaces from drywall compound and promptly remove from floors and other non-drywall surfaces. Repair surfaces stained, marred, or otherwise damaged during drywall application.

.2 Protect installed products from damage from weather, condensation, direct sunlight, construction, and other causes during remainder of the construction period.

.3 Remove and replace panels that are wet, moisture damaged, and mold damaged at no additional cost to the Owner.

.1 Indications that panels are wet or moisture damaged include, but are not limited to, discoloration, sagging, or irregular shape.

.2 Indications that panels are mold damaged include, but are not limited to, fuzzy or splotchy surface contamination and discoloration.

END OF SECTION

PART - 1 GENERAL

1.1 SUMMARY

.1 Section Includes:

.1 Labour, Products, equipment, and services necessary to complete the work of gypsum board shaft wall assemblies.

.2 Related Requirements:

.1 Comply with Conditions of the Contract and Division 01 - General Requirements.

.2 Section 09 21 16 "Gypsum Board Assemblies" for gypsum board assemblies, metal framing systems, and other gypsum board components.

1.2 ACTION SUBMITTALS

.1 Product Data:

.1 Submit product data for each component of gypsum board shaft wall assembly.

.2 Prior to ordering products or materials, submit manufacturer's printed product datasheets for each type of product. Include product characteristics, performance criteria, physical size, finish, and limitations for products listed in selected designs.

1.3 DELIVERY, STORAGE, AND HANDLING

.1 Deliver materials in original packages, containers, or bundles bearing brand name and identification of manufacturer or supplier.

.2 Store materials inside under cover and keep them dry and protected against damage from weather, condensation, direct sunlight, construction traffic, and other potential causes of damage. Stack panels flat and supported on risers on a flat platform to prevent sagging.

1.4 FIELD CONDITIONS

.1 Environmental Limitations: Comply with ASTM C 840 requirements or with gypsum board manufacturer's written recommendations, whichever are more stringent.

.2 Do not install interior products until installation areas are enclosed and conditioned.

.3 Do not install panels that are wet, moisture damaged, or mould damaged.

.1 Indications that panels are wet or moisture damaged include, but are not limited to, discoloration, sagging, and irregular shape.

.2 Indications that panels are mould damaged include, but are not limited to, fuzzy or splotchy surface contamination and discoloration.

PART - 2 PRODUCTS

2.1 PERFORMANCE REQUIREMENTS

.1 Fire-Resistance-Rated Assemblies: For fire-resistance-rated assemblies, provide materials and construction identical to those tested in assembly indicated according to CAN/ULC S101 by an independent testing agency.

.1 Fire-Resistance Rating: As indicated.

2.2 **MATERIALS**

.1 Gypsum shaft liner board: ASTM C 1396/C 1396M; manufacturer's proprietary fire-resistive liner panels with glass mat faces, Type X core, 25 mm (1”) thick gypsum board panel, 600 mm (24”) wide, double bevel long edges: Sheetrock Glass Mat Liner Panel by CGC, or other acceptable equivalents.

.2 Shaft wall studs and runners: Minimum 0.45 mm (25 gauge) thick galvanized steel members, "J Runner", "C-H Stud" and "E-Stud" by CGC Inc., or other acceptable equivalents.

.3 Steel studs: ASTM C645, minimum 0.46 mm (0.018”) base metal thickness, hot-dipped galvanized to ASTM A653/A653M G60 (Z180) zinc coating, roll formed, widths as indicated, with knock-out holes for mechanical and electrical services. Use 20 gauge studs for cement board and fiber reinforced panels.

.4 Floor and ceiling tracks: ASTM C645, minimum 0.46 mm (0.018”) base metal thickness, hot-dipped galvanized to ASTM A653/A653M G60 (Z180) zinc coating, roll formed, width to suit studs.

.5 Furring runners and channels: ASTM C645, minimum 0.46 mm (0.018”) base metal thickness, hot-dipped galvanized to ASTM A653/A653M G60 (Z180) zinc coating, roll formed.

.6 Hangers, tie wires, inserts, anchors: Manufacturer's standard.

.7 Insulating strip: Rubberized, moisture resistant 3 mm (1/8") thick foam strip, 13 mm (1/2") wide, with self-sticking adhesive on one face, lengths as required.

.8 Acoustical sealant: Acoustical sealant by Tremco Ltd.

.9 Joint and laminating compounds: As recommended by gypsum board and cement board manufacturer, high bond, low shrinkage, and asbestos-free.

.10 Joint tape: 50 mm (2") wide reinforced tape.

.11 Acoustical insulation: AFB by Roxul Inc., or SAFB by Fibrex, or QuietZone Acoustic Batt Insulation by Owens Corning Canada LP, or other approved equivalent; width to match stud spacing.

PART - 3 EXECUTION

3.1 **EXAMINATION**

.1 Examine substrates to which gypsum board shaft wall assemblies attach or abut, including hollow-metal frames, elevator hoistway door frames, cast-in anchors, and structural framing. Examine for compliance with requirements for installation tolerances and other conditions affecting performance.

.2 Examine panels before installation. Reject panels that are wet, moisture damaged, and mould damaged.

.3 Proceed with installation only after unsatisfactory conditions have been corrected.

3.2 **INSTALLATION**

.1 General: Install gypsum board shaft wall assemblies to comply with requirements of fire-resistance-rated assemblies indicated, manufacturers’ written installation instructions, and ASTM C 754 other than stud-spacing requirements.

.2 Do not bridge building expansion joints with shaft wall assemblies; frame both sides of expansion joints with furring and other support.

.3 Install supplementary framing in gypsum board shaft wall assemblies around openings and as required for blocking, bracing, and support of gravity and pullout loads of fixtures, equipment, services, heavy trim, furnishings, wall-mounted door stops, and similar items that cannot be supported directly by shaft wall assembly framing.

.1 Elevator Hoistway: At elevator hoistway-entrance door frames, provide jamb struts on each side of door frame.

.2 Reinforcing: Where handrails directly attach to gypsum board shaft wall assemblies, provide galvanized steel reinforcing strip with 0.84-mm (0.033-inch) minimum thickness of base metal (uncoated), accurately positioned and secured behind at least one layer of face panel.

.4 Penetrations: At penetrations in shaft wall, maintain fire-resistance rating of shaft wall assembly by installing supplementary steel framing around perimeter of penetration and fire protection behind boxes containing wiring devices, elevator call buttons, elevator floor indicators, and similar items.

.5 Isolate perimeter of gypsum panels from building structure to prevent cracking of panels, while maintaining continuity of fire-rated construction.

.6 Firestop Tracks: Where indicated, install to maintain continuity of fire-resistance-rated assembly indicated.

.7 Control Joints: Install control joints according to ASTM C 840 and in specific locations approved by Consultant while maintaining fire-resistance rating of gypsum board shaft wall assemblies.

.8 Installation Tolerance: Install each framing member so fastening surfaces vary not more than 3 mm (1/8 inch) from the plane formed by faces of adjacent framing.

.9 Securely attach floor and ceiling J-runners with the short leg toward inside side of wall, and fasten to structure at 600 mm (24") o.c.

.10 Erect liner panel vertically between runners. Where walls exceed maximum available panel height, position panels and joints within upper and lower third points of wall. Stagger joints in adjacent panels and reinforce with horizontal C-H studs.

.11 Install C-H studs between liner panels with panels inserted in the stud groove.

.12 Install E-studs or J-runners vertically at intersections, corners and openings.

.13 Frame openings with E-studs or J-runners horizontally, reinforce as necessary.

.14 Apply two layers of shaft wall gypsum board to studs and runners on the opposite side of liner panels.

.15 Fasten base layer vertically to framing with 25 mm (1") screws at 300 mm (12") o.c. Apply face layer vertically over base layer with joints staggered and attached with 41 mm (1-5/8") screws staggered from those on base layer, spaced at 300 mm (12") o.c. and driven into studs and runners.

.16 Allow for movement of structures so that the wall will not have load imposed.

3.3 **INSTALLATION - TAPING AND FILLING**

.1 Fill joints, casing beads, corner beads, screwholes and depressions on gypsum board surfaces exposed to view to provide smooth seamless surfaces and square neat corners.

.2 Apply joint compounds and reinforcing tapes in accordance with manufacturer's specifications.

.3 Fill joints and apply joint compounds by three-coat method. Apply cover coat 175 mm (7") wide, level coat 250 mm (10") wide, and skim coat 300 mm (12") wide.

.4 Embed reinforcing tape in a cover coat of joint compound. Apply level coat of joint compound when cover coat has dried. Apply skim coat of compound when level coat has dried.

.5 Feather edges of compounds into surfaces of gypsum boards. After skim coat has dried for at least 24 hours sand to leave smooth for decoration. Do not sand paper face of gypsum board.

.6 At internal corners: First fill gaps between boards with joint compound. Imbed creased reinforcing tape into a thin coat of joint compound applied 50 mm (2") wide at each side of corner. Apply cover coat. Apply skim coat to one side of joint, and when dry apply skim coat to other side.

.7 At external corners: Fill to nose of corner bead with joint compound and sand smooth.

.8 At screwheads and nailheads: Fill holes and depressions with a two coat application of joint compound and sand smooth.

.9 Finish gypsum board joints above finished ceiling with tape and first coat of joint compound.

3.4 **PROTECTION**

.1 Protect installed products from damage from weather, condensation, direct sunlight, construction, and other causes during remainder of the construction period.

.2 Remove and replace panels that are wet, moisture damaged, or mould damaged.

.1 Indications that panels are wet or moisture damaged include, but are not limited to, discoloration, sagging, and irregular shape.

.2 Indications that panels are mould damaged include, but are not limited to, fuzzy or splotchy surface contamination and discoloration.

END OF SECTION

PART - 1 GENERAL

1.1 SUMMARY

.1 Section Includes:

.1 Labour, Products, equipment and services necessary to complete the work of this Section.

1.2 QUALITY ASSURANCE

.1 Installer: Trained and approved by the manufacturer and having a minimum three years experience in the installation of the work described in this Section and can show evidence of satisfactory completion of projects of similar size, scope and type. If requested, provide letter of certification from manufacturer stating that installer is certified applicator of its products, and is familiar with proper procedures and installation requirements required by the manufacturer.

.2 Finish ceiling system: Square with adjoining walls and level within 1:1000, in true plane, free from distorted, warped, soiled or damaged panels or grid.

.3 Comply with ASTM C635/C635M Intermediate Duty and C636/C636M except as otherwise specified herein.

.4 Maximum deflection of completed ceiling system: 1/360 of span.

.5 Design suspended ceiling system for adequate support of electrical fixtures as required by Electrical Safety Authority.

.6 Pre-installation meeting: Two weeks prior to commencing work of this Section, arrange for manufacturer's technical representative to visit the site and review preparatory and installation procedures to be followed, conditions under which the work will be done, and inspect the surfaces to receive the work of this Section. Advise the Consultant of the date and time of the meeting.

1.3 SUBMITTALS

.1 Product Data:

.1 For each type of product, certifying compliance with the specified or named product or material.

.2 Prior to ordering products or materials, submit manufacturer's printed product datasheets for each type of product. Include product characteristics, performance criteria, physical size, finish and limitations for products listed in selected designs.

.2 Samples: Duplicate full size samples of each type acoustical units and 300 mm long grid members.

.3 Provide shop drawings, load diagrams, and design calculations signed and stamped by a professional engineer licensed in the Province of Ontario. Ensure that the proposed ceiling and suspension system comply with the requirements of the Ontario building Code 2006, and with the seismic requirements for the project location.

.1 Shop drawings: Indicate typical plans, reflected ceiling plans, and sections of the suspended ceiling system as well as details on connections to the building, suspension system layout, spacing, locations, member sizes and thicknesses, fasteners, hangers, and all relevant accessories. Indicate materials and finishes.

.2 Load diagrams: Indicate dead and live loads to be carried by the building structure, and method in which vertical building deflections are handled.

.3 Design calculations: Provide complete set of design calculations showing design and seismic loads. Indicate seismic vulnerability for project location.

1.4 **ENVIRONMENTAL CONDITIONS**

.1 Permit wet work to dry before commencement of installation.

.2 Maintain uniform minimum temperature of 15°C and humidity of 20 - 40% before and during installation.

.3 Store materials in work area 48 hours prior to installation.

1.5 **EXTRA STOCK**

.1 Provide two percent of each pattern and type of acoustical units. Store where directed. Extra stock to be same production run as installed materials.

PART - 2 PRODUCTS

2.1 **MATERIALS**

.1 Basis of Design – Acoustic Tile Products: Refer to Section 00 01 30 List of Materials for a complete list of acoustic tile products, designations, manufacturers, sizes and colours.

.1 Products by other manufacturers similar in function, design, performance, and construction complying with requirements of this Section may be incorporated into the Work subject to Consultant's acceptance.

.2 Exposed main tee: Hot dipped galvanized steel to ASTM A653/A653M minimum Z90 coating designation, 24 mm exposed face and 38 mm high bulb tee design with double web and separate exposed cap piece, maximum length, with reversible and integral splice. Prefinish tee in baked enamel, standard colour.

.3 Exposed cross tee: Hot dipped galvanized steel to ASTM A653/A653M minimum Z90 coating designation, exposed face to match main tees, 38 mm high bulb tee design of same fabrication as main tee, with override stepped ends to allow cross tee flange to sit on main tee flange providing flush exposed faces, and with positive interlock to main tee, grid module to suit acoustical panels. Finish to match main tees.

.4 Main tee splices: Designed to lock lengths of main tees together so that joined lengths of tee function structurally as a single unit with tee faces at joint perfectly aligned and presenting a tight seam.

.5 Hangers and wires: Galvanized hangers and 2.6 mm minimum galvanized steel wire.

.6 Hold-down clips: Spring steel clips by the grid system manufacturer.

.7 Wall moulding: Prefinished galvanized steel, nominal 25 mm x 25 mm with nominal 25 mm exposed face, hemmed edges. Finish to match main tees.

.8 Shadow wall moulding: Prefinished galvanized steel, 19 mm x 19 mm reveal with nominal 25 mm exposed face, hemmed edges. Finish to match main tees.

.9 Adhesive: Recommended by acoustic unit manufacturer.

PART - 3 EXECUTION

3.1 **INSTALLATION - GENERAL**

.1 Install work in accordance with ASTM C636/C636M and to manufacturer's instructions except where specified otherwise.

.2 Do not commence installation until work above ceiling has been inspected by Consultant.

.3 Lay out system in accordance with reflected ceiling plans.

.4 Ensure work is co-ordinated with location of related components.

3.2 **INSTALLATION - GRID SYSTEM**

.1 Centre acoustical ceiling suspension systems on room axis; install equal border pieces, unless otherwise indicated.

.2 Install hangers spaced at maximum 1200 mm centres and within 150 mm from ends of main tees.

.3 Install supplemental suspension system where ducts or other construction within ceiling plenum produces hanger spacings that interfere with location of hangers at spacings required to support suspension system members. Size supplemental suspension members and hangers to support ceiling loads within performance limits established by referenced standards and publications.

.4 Install hanger wires plumb and securely anchored to the building structural framing, independent of walls, pipes, ducts, and metal deck; install additional framing and hangers to bridge interference items.

.5 Do not bend or twist hangers as a means of levelling. Form double loops tightly and lock to prevent vertical movement or rotation within the loop.

.6 Install wall moulding at intersection of ceiling and vertical surfaces to provide correct ceiling height.

.7 Provide additional ceiling suspension hangers within 150 mm of each corner and at maximum 600 mm around perimeter of light fixtures and diffusers.

.8 Use longest practical lengths of tees, furring and running channels to minimize joints. Make joints square, tight, flush and reinforced with concealed splines. Assemble framework to form a rigid and interlocking system.

.9 Run main tees at right angles to length of light fixtures.

.10 Interlock cross tees to main tees to provide rigid assembly.

.11 Frame at openings for light fixtures, air diffusers, speakers and at changes in ceiling heights.

3.3 **INSTALLATION - ACOUSTICAL PANELS**

.1 Neatly cut acoustic units for mechanical and electrical and other services.

.2 Carefully fit acoustic units in place; no broken edges permitted.

.3 Scribe acoustic units to fit adjacent work. Butt joints tight, terminate edges with moulding.

.4 Provide hold-down clips at acoustical system to hold units tight to grid system within 6000 mm of an exterior door and an operable window.

.5 Install adhesive bonded acoustic units to clean, dry and firm substrate.

END OF SECTION

PART - 1 GENERAL

1.1 SUMMARY

.1 Section Includes:

.1 Labour, Products, equipment and services necessary to complete the work of this Section.

1.2 QUALITY ASSURANCE

.1 Installer: Trained and approved by the manufacturer and having a minimum 5 years experience in the installation of the work described in this Section and can show evidence of satisfactory completion of projects of similar size, scope and type.

.2 Products: Provide like Products from same production run. Install Products in sequence from sequentially numbered dye lots.

.3 Pre-installation meeting: Prior to commencing work of this Section, arrange for manufacturer's technical representative to visit the Site and review preparatory and installation procedures to be followed, conditions under which the work will be done, and inspect the surfaces to receive the work of this Section. Advise the Consultant of the date and time of the meeting.

.4 Manufacturer’s site inspection: Have the manufacturer’s technical representative inspect the work at suitable intervals during application and at conclusion of the work of this Section, to ensure the work is correctly installed. When requested, submit manufacturer’s inspection reports and verification that the work of this Section is correctly installed.

.5 Moisture vapour emission of concrete floors: Maximum 3 lbs per 1000 sq.ft. per 24 hour. Test floors to ASTM F1869 using anhydrous calcium chloride method. Provide 3 test sites for floor area up to 1000 sq.ft., add one test site for each additional 1000 sq.ft. or fraction thereof. Locate test sites to cover representative areas of the floor. Conduct test simultaneously on floors free of sealer, curing compounds, oil, grease and other agents that are detrimental to the test and the installation of the Products, and in strict conformance with test kit manufacturer’s written instructions. Do not proceed with work when the moisture vapour emission is above the specified maximum.

.6 Alkalinity of concrete floors: Acceptable range of 5 to 9 on the pH scale. Test floors using distilled water and pH paper. Provide 2 tests for every moisture vapour emission test. Locate test sites to cover representative areas of the floor. Conduct test simultaneously on floors free of sealer, curing compounds, oil, grease and other agents that are detrimental to the test and the installation of the Products, and in strict conformance with test kit manufacturer’s written instructions. Do not proceed with work when the alkalinity is beyond the specified range.

.7 Maintenance seminars: Provide, to the Owner, training seminars and recommendations on Product maintenance procedures.

1.3 SUBMITTALS

.1 Shop Drawings: Show exact locations of all flooring, seams, colours, patterns and protrusions of piping through the floor.

.2 Samples: Duplicate 300 mm x 300 mm samples of each type of floor tile, 300 mm long grounding strip, and resilient base.

.3 Maintenance data: Submit 3 copies of maintenance data, giving specific warning of any maintenance practice or materials which may disfigure or damage the flooring.

1.4 **ENVIRONMENTAL CONDITIONS**

.1 Maintain floor and material temperature at 21 degree C 48 hours prior to, during and 48 hours after installation.

.2 Protect grounding strips from damage by work of other Sections.

1.5 **EXTRA STOCK**

.1 Provide 2% of each colour, pattern and type flooring material required for this project for maintenance use. Store where directed. Extra stock to be same production run as installed materials. Include cost of extra stock in the Contract Price.

1.6 **ELECTRICAL RESISTANCE TESTING**

.1 Test Report: Upon completion of work, manufacturer's representative shall visit site to review installation and conduct electrical resistance of the completed installation. Tile manufacturer shall submit test report and letter stating installation is in accordance with specifications and manufacturer's recommendations.

.2 Measure tile surface resistance using two 5 lb electrodes placed 900 mm apart and 900 mm away from any grounded objects and walls. Similarly measure resistance to ground between one electrode placed 36” from the ground and the walls.

.3 Connect electrodes to a megohmeter with 100 volts open circuit voltage. Apply 100 volts and record reading 15 seconds after application of 100 volts.

.4 Make five tile surface resistance and five resistance to ground measurements at different locations for every 1000 sq.ft.

.5 The average surface resistance and resistance to ground must be less than 106 ohms and no single reading shall be greater than 5 x 106 ohms.

1.7 **EXTENDED WARRANTY**

.1 Submit a 5 year Product and labour warranty, issued in the name of the Owner by the conductive floor tile manufacturer and commencing from date of Substantial Performance. Warranty shall cover the electrostatic performance and wearability of the conductive floor tile installation.

PART - 2 PRODUCTS

2.1 **MATERIALS**

.1 Static dissipative sheet vinyl (ESD-1): CSA A126 and SS-T-312B, high PVC content, Class 1 flame spread and smoke contribution to ASTM E84, electrical resistance 1 Mohms to 1,000 Mohms to ESD S7.1.

.1 Basis of Design: Excelon SDT by Armstrong Flooring.

.1 Colour: to be selected by Consultant from manufacturer’s full range.

.2 Grounding strip: 12 mm wide self-adhering copper tape, acceptable to manufacturer.

.3 Integral flash cove base: Provide integral flash cove base by extending sheet flooring up the vertical surfaces using adhesive, welding rod, and accessories recommended and approved by the flooring manufacturer.

.1 Provide a fillet support strip for integral cove base with a minimum radius of 2.54cm of wood or plastic.

.4 Cove Cap mouldings: rounded top cap, extended over coved material with glue surface, manufactured from a homogeneous composition of polyvinyl chloride (PVC), high quality additives, and colorants, meeting or exceeding ASTM E648 Class 1 Flammability requirements, Phthalate-free. Manufacturer: Johnsonite or approved equivalent.

.5 Primers and adhesives: Nontoxic, waterproof type, solvent free polyurethane, recommended by flooring manufacturer for specific material on applicable substrate, above, at or below grade, 555 by Amtico. Provide compatible primer.

.6 Metal edge strip: Extruded aluminum, smooth mill finish, polished, with lip to extend under floor tile, tapered edge.

.7 Transition adapter: Rubber, 150 by Mercer Products or CTA-XX-A by Johnsonite, standard colour.

.8 Substrate filler: Latex modified Portland cement based, recommended by the flooring manufacturer and approved by the Consultant.

PART - 3 EXECUTION

3.1 EXAMINATION

.1 Examine floor surfaces to ensure that they are clean, level and free from cracks, ridges, dusting, scaling and carbonation.

.2 Examine the floors from time to time in advance of the application of flooring to ensure that floors are protected against entry of water and moisture.

.3 Prior to the installation of the flooring, test concrete for excessive moisture content by a method acceptable to the flooring manufacturer.

.4 Cooperate with recommendations of flooring manufacturer.

3.2 PREPARATION

.1 Prepare floor substrates in accordance with manufacturer's recommendations including but not limited to vacuuming, grinding, sanding, cleaning, etc.

.2 Remove paint, coating, rust, and other materials that will prevent the grounding effect of the conductive floor tile installation.

.3 Fill cavities, cracks, joints and other surface imperfections in substrate with latex type fill in order to produce a smooth, flat, hard surface for receipt of the flooring.

3.3 INSTALLATION – GROUNDING STRIPS

.1 Apply grounding strips to floor and building grounds such as walls and columns. Provide minimum 600 mm long strips on floor and minimum 75 mm on walls or columns. Mechanically fasten strips to building grounds using fasteners approved by the tile manufacturer.

.2 Provide one grounding strips per 93 sq.m. of floor and a minimum of two strips per room, or as directed by floor manufacturer.

3.4 INSTALLATION – SHEET FLOORING

.1 Apply adhesive uniformly on subfloor and grounding strips using recommended trowel in accordance with flooring manufacturer's instructions. Do not spread more adhesive than can be covered by flooring before initial set takes place.

.2 Lay flooring with joints aligned and parallel to building lines to produce symmetrical tile pattern. Start tile pattern at centre of room. Border tiles minimum half tile width.

.3 Continuously machine weld seams with welding rods using methods and equipment in accordance with manufacturer's printed instructions.

.4 Continue flooring through areas to receive demountable type partitions without interrupting floor pattern.

.5 As installation progresses roll flooring in perpendicular directions with 69 kg minimum roller to ensure full adhesion.

.6 Cut flooring neatly around walls, columns and fixed objects.

.7 Terminate flooring at centerline of door in openings where adjacent floor finish is dissimilar.

.8 Install metal edge strips at unprotected or exposed edges where flooring terminates.

.9 Provide transition adapter at interface of dissimilar floor finishes, straight and true. Where interface occurs at doorway, locate adapter underneath door in its closed position.

3.5 **INSTALLATION - BASE**

.1 Provide integral flash cove wall base, including cove fillet support strip and top edge cove cap moulding. Construct flash cove base in accordance with the flooring manufacturer's instructions. Treat all seams in the flash cove area the same as seams throughout the rest of the installation.

.2 Securely adhered cove cap mouldings to the wall utilizing the manufacturer's recommended adhesive. Roll cove cap mouldings with a J-hand roller after installation, to ensure proper bonding.

3.6 **CLEANING**

.1 Remove any adhesive and releasing agent from flooring and base as the work progresses.

.2 Protect the newly laid flooring from construction traffic for a period of 48 hours. At the end of this period thoroughly clean all surfaces with a manufacturer approved cleaner.

.3 Do not wax floor tiles.

3.7 **PROTECTION**

.1 Protect flooring from damage until final inspection.

.2 Prohibit traffic on floor for 48 hours after installation.

END OF SECTION

PART - 1 GENERAL

1.1 SUMMARY

.1 Section Includes: Labour, Products, equipment and services necessary to complete the work of this Section including but not limited to:

.1 Trowel applied Epoxy flooring system.

1.2 REFERENCES

.1 ASTM International:

.1 ASTM C307-18, Standard Test Method for Tensile Strength of Chemical-Resistant Mortar, Grouts, and Monolithic Surfacings.

.2 ASTM C413-18, Standard Test Method for Absorption of Chemical-Resistant Mortars, Grouts, Monolithic Surfacings, and Polymer Concretes.

.3 ASTM C579-18, Standard Test Methods for Compressive Strength of Chemical-Resistant Mortars, Grouts, Monolithic Surfacings, and Polymer Concretes.

.4 ASTM C580-18, Standard Test Method for Flexural Strength and Modulus of Elasticity of Chemical-Resistant Mortars, Grouts, Monolithic Surfacings, and Polymer Concretes.

.5 ASTM D570-98(2018), Standard Test Method for Water Absorption of Plastics.

.6 ASTM D638-14, Standard Test Method for Tensile Properties of Plastics.

.7 ASTM D695-15, Standard Test Method for Compressive Properties of Rigid Plastics.

.8 ASTM D2240-15(2021), Standard Test Method for Rubber Property—Durometer Hardness.

.9 ASTM D2369-20, Standard Test Method for Volatile Content of Coatings.

.10 ASTM D3273-21, Standard Test Method for Resistance to Growth of Mold on the Surface of Interior Coatings in an Environmental Chamber.

.11 ASTM D4060-19, Standard Test Method for Abrasion Resistance of Organic Coatings by the Taber Abraser.

.12 ASTM D4263-83(2018), Standard Test Method for Indicating Moisture in Concrete by the Plastic Sheet Method.

.13 ASTM D4541-22, Standard Test Method for Pull-Off Strength of Coatings Using Portable Adhesion Testers.

.14 ASTM G21-15(R2021), Standard Practice for Determining Resistance of Synthetic Polymeric Materials to Fungi.

.2 Canadian Standards Association

.1 CSA A23.1-19/A23.2-19, Concrete materials and methods of concrete construction/Test Methods and Standard practices for Concrete.

.3 International Concrete Repair Institute (IRCI):

.1 ICRI Guideline No. 310.2R-2013, Selecting and Specifying Concrete Surface Preparation for Sealers, Coatings and Polymer Overlays.

.4 Underwriters' Laboratories of Canada (ULC)

.1 CAN/ULC-S102-18, Standard Method of Test for Surface Burning Characteristics of Building Materials and Assemblies.

.2 CAN/ULC-S102.2-2018, Standard Method of Test for Surface Burning Characteristics of Flooring, Floor Coverings, and Miscellaneous Materials and Assemblies.

1.3 ACTION AND INFORMATIONAL SUBMITTALS

.1 Provide submittals in accordance with Division 01.

.2 Product data: submit manufacturer's technical data, installation instructions and general recommendations for each type of flooring material required.

.1 Submit typical manufacturer’s installation details for project specific conditions such as cove bases, floor drains, service penetrations, crack repair, housekeeping pads, door frame terminations and flooring terminations.

.2 Submit for Consultant’s review and acceptance proposed layout plan for divider strips, cove bases and termination strips.

.3 Low-Emitting Materials:

.1 Submit listing of Products used in building, showing compliance with VOC and chemical component limits or restriction requirements.

.4 Samples for Verification: Submit samples of each colour and material being applied, with texture to simulate actual conditions, and as follows for Consultant’s verification:

.1 Use representative colours when preparing samples for review; resubmit until required sheen, colour, and texture are achieved.

.2 List of material and application for each coat of each sample; label each sample for location and application.

.3 Submit samples on the hardboard substrate for Consultant’s review of colour and texture. Provide two 100 mm square samples for each colour and finish.

.4 Obtain written acceptance of Samples in writing from Consultant before commencing Work of this Section.

.5 Sample mock-up: provide site sample floor area of 0.1 sq.m for each type of flooring, including waterproofing membrane, primer and necessary number of coats to obtain specified finish, showing colour range, bond and quality of work. Sample mock-up to include all accessories and cove bases. Erect additional sample, if required, to obtain approval. Approved samples shall become standard of comparison for flooring work on Site and shall not be destroyed or moved until authorized by Consultant.

.6 Maintenance data: submit maintenance data, include specific instructions for maintenance, preservation and cleaning. Provide adequate warning of maintenance materials or practices which may be detrimental to flooring.

1.4 CLOSEOUT SUBMITTALS

.1 Operations and Maintenance Data:

.1 Submit manufacturer's printed maintenance instructions for repair, cleaning and maintenance procedures

.2 Provide adequate warning of maintenance materials or practices which may be detrimental to flooring

.3 Include name of original Applicator and contact information.

1.5 QUALITY ASSURANCE

.1 Single Source Responsibility: Obtain primary resinous flooring materials including primers, resins, hardening agents, aggregates, finish or sealing coats from a single manufacturer

.2 Installer: trained and approved by the manufacturer and having a minimum three years experience in the installation of the work described in this Section and can show evidence of satisfactory completion of projects of similar size, scope and type.

.3 Maintenance seminars: provide, to the Owner, training seminars and recommendations on Product maintenance procedures.

.4 Pre-installation meeting: not less than 4 weeks prior to commencing work of this Section, arrange for manufacturer's technical representative to visit the site and review preparatory and installation procedures to be followed, conditions under which the work will be done, coordination with other trades, and inspect the surfaces to receive the work of this Section. Advise the Consultant of the date and time of the meeting.

.5 Manufacturer’s site inspection: have the manufacturer’s technical representative inspect the Work at suitable intervals during application and at conclusion of the work of this Section, to ensure the Work is correctly installed. When requested, submit manufacturer’s inspection reports and verification that the work of this Section is correctly installed.

.6 Testing of concrete floors:

.1 Test floors that have been cured for minimum 28 days, and after preparation for Product installation is complete and patching or levelling compound is fully cured. Test concrete substrate to ensure relative humidity or water vapour emission rates are in accordance with manufacturer’s recommendations

.2 Conduct testing simultaneously on floors free of sealer, curing compounds, oil, grease and other agents detrimental to the test and Product performance. Locate test sites to cover representative installation areas. Do not proceed with work when the test results do not conform to the specified allowable.

.3 Cohesive strength: minimum 1.5 MPa by tensile load as tested to CSA A23.2-6B. Do one test for every 10 sq.m. or fraction thereof.

.4 Moisture vapour transmission: to ASTM D4263, plastic sheet method, no visible condensation or vapour allowed. Do one test for every 5 sq.m. or fraction thereof.

.5 Surface moisture content: maximum 4%, tested by moisture meter. Do one test for every 5 sq.m. or fraction thereof.

.6 Surface temperature: minimum 3 degree C above the measured dew point.

.7 Tolerances: finish seamless flooring surfaces to produce plumb and level floor, or straight where sloped to drains, within tolerance of 3 mm in 3 m.

1.6 DELIVERY, STORAGE AND HANDLING

.1 Packing, shipping, handling and unloading:

.1 Deliver, store and handle materials in accordance with Division 01, and in accordance with manufacturer's printed directions.

.2 Deliver materials to Site in original, unopened containers with manufacturers labels and seals intact. Labels shall identify manufacturer's name, brand name of product, grade and type, application directions and shelf life and/or expiry date of product.

.3 Store flammable materials in safe, approved containers to eliminate fire hazards and remove from Site at end of each work shift.

.4 Ensure that storage areas for coating materials and floor surfaces are above 13°C and below 29°C.

.5 Do not use materials that have been stored for period of time exceeding maximum recommended shelf life of materials.

1.7 **PROJECT CONDITIONS**

.1 Do not install the Work of this Section outside of the following environmental ranges without Manufacturers' written acceptance:

.1 Material Temperature: Precondition material for at least 24 hours between 18°C and 30°C.

.2 Ambient and Substrate Temperature: Minimum/Maximum 13˚/30˚C. Maintain constant ambient room temperature for 48 hours before, during and after installation or until cured

.3 Substrate temperature must be at least 3˚C above measured Dew Point to reduce the risk of condensation, which may lead to adhesion failure or "blushing" on the floor finish. Be aware that the substrate temperature may be lower than the ambient temperature.

.4 Mixing and Application attempted at Material, when Ambient and/or Substrate Temperature conditions less than 18˚C will result in a decrease in Product workability and slower cure rates.

.5 Relative Ambient Humidity: maximum ambient humidity 75% (during application and curing).

.6 Prior to application, measure and confirm acceptable test results for Substrate Moisture Content, Ambient Relative Humidity, Ambient and Surface Temperature and Dew Point.

.2 Maintain well-lit and well-ventilated area.

.3 Comply with flooring manufacturer's directions for maintenance of substrate temperatures, ventilation and other conditions required to execute and protect work.

.4 Supply temporary utilities, including power, water, heat and finished lighting for use by applicator.

.5 Protect adjacent surfaces from damage resulting from work of this Section. If necessary, cover or mask adjacent surfaces to those receiving flooring including fixtures and equipment.

.6 Materials soiled by coatings during application and storage, and from which soil cannot be completely removed, shall be replaced by this Section at no extra cost.

.7 Erect barriers to prevent entry and presence of workers not performing work of this Section during application of flooring and for 48 hours following completion of application.

.8 Post "No Smoking" signs while work is in progress and curing. Ensure that spark-proof electrical equipment is used in areas where inflammable materials are being applied. Prevent use of open flames or equipment that may cause sparks during this phase of work.

PART - 2 PRODUCTS

2.1 MATERIALS

.1 General: Materials used in application of each flooring system shall be of same manufacturer and same supplier.

.2 Basis of Design: Refer to Finishes Schedule, Section 09 06 00, for complete list of all products, designations, manufacturers, sizes, finishes and colours.

.1 Total system thickness as per manufacturer's selected system, but no less than 3 mm, exclusive of primer and aggregate.

.2 Primer: two component, solvent-free, low viscosity, high strength epoxy resin, used as an epoxy primer and binder.

.3 Finish Coat: two-component, high solids, silicone free, low viscosity epoxy resin.

.1 Colour: as indicated.

.4 Minimum Physical Properties of the complete system, including primers, fillers, aggregates, and sealers, are as follows:

.1 Water Absorption: ~ 0.3% to ASTM C413.

.2 Bond Strength: > 2.0 MPa to ASTM D4541.

.3 Abrasion Resistance: ASTM D4060 Taber Abraser, CS-17 Wheel/1000 g / 1000 cycles no more than ~ 0.17 g loss.

.4 Resistance to Fungi Growth: Rated 1 to ASTM G21.

.5 Resistance to Mold Growth: Rated 10 to ASTM D3273.

.6 VOC Content: < 50 g/L.

.3 Epoxy Cove Base: three-component, solid colour, low odour, low VOC, vertical grade coving and detailing mortar complete with manufacturers recommended primer.

.1 Cove strips: type recommended by flooring manufacturer.

.4 One-Component, Polymer-Modified, Fast-Setting, Cementitious Repair Material: Packaged dry mix for repair of concrete, and containing a latex additive as either a dry powder or a separate liquid added during mixing; Mapecem 102 by MAPEI Inc., or other approved equivalent, compatible with elastomeric waterproofing system.

.5 Waterproofing membrane: Two component, high-quality polyurethane flexible membrane, liquid applied to 25 mils DFT, as recommended by epoxy flooring system manufacturer.

.1 Primer: as recommended by waterproofing membrane manufacturer

.6 Additional materials: Fill all joints, cracks, depressions or any other surface irregularities using additional materials recommended by the manufacturer of the specified product.

.7 Divider strips: L shape to required floor thickness, white alloy zinc.

.8 Joint backing: Preformed, compressible strips of closed cell polyethylene or urethane foam, rubber tubing or non-migrating plasticized vinyl with shore 'A' hardness of 20 and tensile

strength between 140 kPa and 200 kPa. Sizes and shapes to suit various conditions, diameter 25% greater than joint width. Compatible with sealant, primer, epoxy flooring and substrate.

.9 Joint sealant: CAN/CGSB-19.24-M, Type 1, Class B, multicomponent modified urethane base, chemical curing; material compatible with floor finish and as recommended by flooring manufacturer.

.10 Backing Plates: galvanized sheet steel, minimum base metal thickness 1.2 mm, in length indicated and of 125 mm height.

PART - 3 EXECUTION

3.1 EXAMINATION

.1 Ensure that concrete slab has been properly cured and dry for minimum of 28 days.

.2 Ensure that no curing and sealing compounds, hardeners or other chemical additives have been used on concrete.

.3 Verify that specified environmental conditions are maintained before commencing work. Be familiar with manufacturer's product literature and Material Safety Data Sheets and comply with precautions, handling procedures and equipment requirements.

.4 Report concrete floor test results to Consultant and obtain manufacturer's representative's approval before proceeding.

.5 Monitor the Dew Point during application and initial cure. The surface must be at least 3°C above the measured Dew Point at all times during application and cure.

.6 Do not start work until unsatisfactory conditions have been corrected. Commencement of work indicates acceptance of all surfaces and conditions.

3.2 PREPARATION

.1 Clean subfloor free of laitance, oil, grease and other foreign matter detrimental to flooring application.

.2 Prepare concrete floors with shot blasting or other method recommended by manufacturer. Remove uneven joints, rough areas, foreign and projection off surfaces. Surface to be hard, sound, and roughened to irregular surface with weak concrete removed and surface holes and voids exposed. Equip blasting machine with vacuum to minimize dust.

.3 Repair cracks, holes or other deficiencies in accordance with manufacturer's recommendations.

.4 Blow clean control joints, sawcuts and cracks with compressed air and grout with material compatible with floor coating materials.

.5 Ensure that backing surfaces for cove bases are free of voids and irregularities. Fill recessed joints with recommended material.

.6 All edges that do not terminate at a wall or curb shall be keyed to avoid featheredges. All through floor penetrations such as drains and trenches require a keyed edge that maintains a uniform 6 mm thickness.

.7 Obtain flooring manufacturer's approval of prepared substrate before commencement of work.

.8 Slopes: Provide slopes to drains with the cementitious repair material. Prepare substrates and apply material in accordance with manufacturer's recommendations.

3.3 **INSTALLATION**

.1 Prime concrete substrates to prevent the possibility of blisters, debonding, and pinholes. Apply primer over prepared substrate at manufacturer's recommended spreading rate with timing of application coordinated with subsequent application of topping mix to ensure optimum adhesion between flooring materials and substrate.

.2 Prepare, mix materials and apply each component of flooring system in strict accordance with CGSB 81-GP-10M and manufacturer's printed directions to produce uniform monolithic wearing surface of thickness indicated for each system, with integral cove bases, uninterrupted except at divider strips, sawn joints or other types of joints required.

.3 Apply work to ensure that no laps, pin holes, voids, crawls, skips or other marks or irregularities are visible, and to provide uniform appearance.

.4 Apply work into corners and other restricted areas, up and over equipment bases, and into recesses in floors to ensure full coverage.

.5 Make clean true junctions with no visible overlap between adjoining applications of flooring.

.6 Match approved sample for colour, sheen, texture and slip resistance.

.7 For large areas, stop each day's production at metal dividing strip at lines approved by Consultant.

.8 Primer: Apply primer over prepared substrate, at manufacturer's recommended spreading rate with timing of application coordinated with subsequent application of topping mix to ensure optimum adhesion between flooring materials and substrate.

.9 Waterproofing Membrane

.1 Apply waterproofing minimum 25 dry mils thick to entire floor surface, over coating properly prepared cracks, and joint. Allow overnight cure (16 hour minimum), or as recommended by manufacturer.

.10 Epoxy matrix: Combine aggregate to blended resin to form trowellable mortar. Place mortar over tacky primer and spread in number of coats and at spreading rates required to produce minimum thickness specified. Take care to spread newly mixed materials across the transition of previous applied mixes before the surface begins to set. Allow mortar to stand for a few minutes to permit entrapped air to escape. Allow matrix to harden minimum time recommended by manufacturer before applying finish coats.

.11 When trowelled epoxy matrix has hardened, remove imperfections by lightly abrading surface and vacuum clean. Apply finish coats at spreading rate and following method recommended by manufacturer to achieve minimum thickness and to obtain non-slip finish to match approved samples. Allow minimum recommended drying time between coats.

.12 Epoxy Cove Base: Provide 100 mm high cove base, struck straight to provide line for wall finish. Cap with manufacturer's recommended cove strip. Round interior and exterior corners. Install cove base with a minimum 3 mm thickness.

.1 Seal floor-wall interface with manufacturer's recommended sealer.

.13 Thresholds:

.1 Where flooring terminates at doorways, and difference in height occurs between seamless flooring and other floor finishes, cut back slab for 32 mm width to allow full thickness of seamless flooring to be flush with adjacent floor finish (chasing).

.2 Where flooring terminates at doorways, and floor finishes are of same thickness, provide metal divider strips flush with surfaces.

.14 Floor drains: Slope flooring to drains. Grind concrete around perimeter to provide 6 mm thickness of flooring material which is flush with top of drain and slopes.

.15 Control joints: Where substrate is interrupted by isolation, control or expansion joints, provide saw-cut joint in flooring after floor installation, install backer rod and fill with manufacturer's recommended epoxy or urethane sealant.

3.4 **ADJUSTMENT AND CLEANING**

.1 Touch up and refinish minor defects in work. Refinish entire coated surface areas where finish is damaged or otherwise unacceptable.

.2 Remove promptly as work progresses spilled or splattered coating materials from adjacent surfaces. Clean floors on completion of Work. Do not mar surfaces while removing splatters.

.3 Protect completed work from contact with water, chemical exposure, and traffic by suitable means for at least 7 days to allow proper curing of floor finish.

.4 Protect work from any trades using area after completion of installation.

END OF SECTION

PART - 1 GENERAL

1.1 SUMMARY

.1 Section Includes:

.1 Labour, Products, equipment and services necessary to complete the work of this Section.

1.2 QUALITY ASSURANCE

.1 Applicator experience: Having minimum of five years proven satisfactory experience. When requested, provide a list of the last three comparable projects including, name and location, consultant, start and completion dates, and value of the painting work.

.2 Applicator qualification: Qualified journeypersons, painters, as defined by local jurisdiction shall be engaged in painting and decorating work. Apprentices may be employed provided they work under the direct supervision of a qualified journeyperson in accordance with trade regulations.

.3 Materials, preparation and quality of work: In conformance with requirements of the latest edition of the Architectural Painting Specification Manual by the Master Painters Institute, referred to as the MPI Painting Manual in this Section, issued by the local MPI Accredited Quality Assurance Association having jurisdiction.

.4 Manufacturers and products: Listed under the Approved Product List section of the MPI Painting Manual.

.5 Maintenance seminars: Provide, to the Owner, training seminars and recommendations on Product maintenance procedures.

.6 Pre-installation meeting: Two weeks prior to commencing work of this Section, arrange for manufacturer's technical representative to visit the site and review preparatory and installation procedures to be followed, conditions under which the work will be done, and inspect the surfaces to receive the work of this Section. Advise the Consultant of the date and time of the meeting.

.7 Manufacturer’s site inspection: Have the manufacturer’s technical representative inspect the Work at suitable intervals during application and at conclusion of the work of this Section, to ensure the Work is correctly installed. When requested, submit manufacturer’s inspection reports and verification that the work of this Section is correctly installed.

.8 All surfaces requiring painting shall be inspected by the Consultant who shall notify the Consultant and General Contractor in writing of any defects or problems, prior to commencing painting work, or after the prime coat shows defects in the substrate.

.9 Ensure written confirmation is received from steel fabricators of the specific surface preparation procedures and primers used for steel work to ascertain appropriate and compatible finish materials.

1.3 SAMPLES AND MOCK-UPS

.1 Samples: Provide duplicate minimum 300 mm square samples of surfaces or acceptable facsimiles requested painted with specified paint or coating in colours, gloss, sheen and textures required to MPI Painting Manual standards for review. When approved, samples become acceptable standard of quality for appropriate on-site surface with one of each sample retained on-site.

.2 Sample installations: When requested by the Consultant, prepare and paint designated surface, area, room or item in each colour scheme to requirements specified, with specified paint or coating showing selected colours, gloss, sheen, textures and quality of work to MPI Painting Manual standards for review and approval. When approved, surface, area, room and items become acceptable standard of finish quality and workmanship for similar on-site work.

1.4 **SUBMITTALS**

.1 List of painting materials: Submit duplicate copy of list of painting materials for review prior to ordering materials. If requested, provide an invoice list of all paint materials ordered for project work to Consultant indicating manufacturer, types and quantities for verification and compliance with specification and design requirements.

.2 Material Safety Data Sheets (MSDS): Submit duplicate copies prior to commencement of work for review and for posting at job site as required.

.3 Project Data Manual: At project completion provide an itemized list complete with manufacturers' application instructions, paint type and colour coding for all colours used for Owner's later use in maintenance.

1.5 **PRODUCT DELIVERY, STORAGE AND HANDLING**

.1 Deliver all painting materials in sealed, original labelled containers bearing manufacturer's name, brand name, type of paint or coating and colour designation, standard compliance, materials content as well as mixing and/or reducing and application requirements.

.2 Store all paint materials in original labelled containers in a lockable, dry, heated and well ventilated single designated area meeting the minimum requirements of both paint manufacturer and authorities having jurisdiction and at a minimum ambient temperature of 7 degree C. Only material used on this project to be stored on site.

.3 Where toxic, volatile, explosive, flammable materials are being used, provide adequate fireproof storage lockers and take all necessary precautions and post adequate warnings such as no smoking signs as required.

.4 Take necessary precautionary and safety measures to prevent fire hazards and spontaneous combustion and to protect the environment from hazard spills. Store materials that constitute a fire hazard in suitable closed and rated containers and removed from the site on a daily basis.

.5 Comply with requirements of authorities having jurisdiction, in regard to the use, handling, storage and disposal of hazardous materials.

1.6 **SCHEDULING**

.1 Schedule painting operations to prevent disruption of and by other Sections.

.2 Schedule painting operations in occupied facilities to prevent disruption of occupants in and about the building. Perform painting after facility working hours in accordance with Owner's operating requirements. Schedule work such that painted surfaces will have dried before occupants are affected. Obtain written authorization from Consultant for changes in work schedule.

1.7 **PROJECT CONDITIONS**

.1 Unless specifically pre-approved by the Consultant, and the product manufacturer, do not perform work when the ambient air and substrate temperatures are below 10 degree C for both interior and exterior work.

.2 Do not perform exterior work unless environmental conditions are within MPI and manufacturer's requirements or until adequate weather protection is provided. Where required, provide suitable weatherproof covering and sufficient heating facilities to maintain minimum ambient air and substrate temperatures for 24 hours before, during and after work is completed.

.3 Do not perform interior work unless adequate continuous ventilation and sufficient heating facilities are in place to maintain ambient air and substrate temperatures above minimum requirements for 24 hours before, during and 48 hours after work is complete, unless required otherwise by manufacturer's instructions. Provide supplemental ventilating and heating equipment if ventilation and heating from existing system is inadequate to meet minimum requirements.

.4 Do not perform work when the relative humidity is above 85% or when the substrate temperature is less than 3 degree C above the measured dew point.

.5 Do not perform work when the maximum moisture content of the substrate exceeds:

.1 12 % for concrete and masonry.

.2 15% for wood.

.3 12 % for plaster and gypsum board.

.6 Conduct all moisture tests using a properly calibrated electronic Moisture Meter, except test concrete floors for moisture using a simple cover patch test.

.7 Test concrete, masonry and plaster surfaces for alkalinity as required.

.8 Apply work only to dry, clean, properly cured and adequately prepared surfaces in areas where dust is no longer generated by construction activities such that airborne particles will not affect the quality of finished surfaces.

.9 Do not perform work unless a minimum lighting level of 323 Lux is provided on surfaces to be painted or decorated.

1.8 **EXTRA STOCK**

.1 At project completion provide 4 liters of each type and colour of paint from same production run used in unopened cans, properly labelled and identified for Owner's later use in maintenance. Store where directed.

1.9 **WASTE MANAGEMENT AND DISPOSAL**

.1 Paint, stain and wood preservative finishes and related materials such as thinners, solvents are regarded as hazardous products and are subject to regulations for disposal. Obtain information on these controls from applicable authorities having jurisdiction.

.2 Separate and recycle waste materials. Where paint recycling is available, collect waste paint by type and provide for delivery to recycling or collection facility. Materials that cannot be reused must be treated as hazardous waste and disposed of in an appropriate manner.

.3 Place materials defined as hazardous or toxic waste, including used sealant and adhesive tubes and containers, in containers or areas designated for hazardous waste.

.4 Strictly adhere to the following procedures to reduce the amount of contaminants entering waterways, sanitary and storm drain systems or into the ground:

.1 Retain cleaning water for water-based materials to allow sediments to be filtered out. In no case shall equipment be cleaned using free draining water.

.2 Retain cleaners, thinners, solvents and excess paint and place in designated containers and ensure proper disposal.

.3 Return solvent and oil soaked rags used during painting operations for contaminant recovery, proper disposal, or appropriate cleaning and laundering.

.4 Dispose of contaminants in an approved legal manner in accordance with hazardous waste regulations.

.5 Empty paint cans are to be dry prior to disposal or recycling (where available).

.6 Close and seal tightly partly used cans of materials including sealant and adhesive containers and store protected in well ventilated fire-safe area at moderate temperature.

.5 Set aside and protect surplus and uncontaminated finish materials not required by the Owner and deliver or arrange collection for verifiable re-use or re-manufacturing.

PART - 2 PRODUCTS

2.1 MATERIALS

.1 Only materials listed in the latest edition of the MPI Approved Product List (APL) are acceptable for use on this project. Provide material from a single manufacturer for each system used.

.2 Other materials not listed in the APL shall be the highest quality product of an MPI listed manufacturer and shall be compatible with paint materials being used as required.

.3 All materials used shall be lead and mercury free and shall have low VOC content where possible.

.4 Where required, use only materials having a minimum MPI Environmentally Friendly E2 or E3 rating based on VOC (EPA Method 24) content levels.

.5 Where indoor air quality is an issue, use only MPI listed materials having a minimum E2 or E3 rating.

.6 Provide materials having good flowing and brushing properties and capable to dry or cure free of blemishes, sags, air entrapment.

.7 Where required, paints and coatings shall meet flame spread and smoke developed ratings to code requirements and authorities having jurisdiction.

2.2 EQUIPMENT

.1 Painting and Decorating Equipment: to best trade standards for type of product and application.

.2 Spray Painting Equipment: of ample capacity, suited to the type and consistency of paint or coating being applied and kept clean and in good working order at all times.

2.3 **MIXING AND TINTING**

.1 Unless otherwise specified or pre-approved, provide materials ready-mixed and pre-tinted. Re-mix materials in containers prior to and during application to ensure break-up of lumps, complete dispersion of settled pigment, and color and gloss uniformity.

.2 Mix paste, powder or catalyzed materials in strict accordance with manufacturer's written instructions.

.3 Do not exceed amount of thinner beyond manufacturer's recommendations. Do not use kerosene or organic solvents to thin water-based materials.

.4 If required, thin paint for spraying according in strict accordance with paint manufacturer's instructions. If directions are not on container, obtain instructions in writing from manufacturer and provide copy of instructions to Consultant.

2.4 **FINISH AND COLORS**

.1 The Consultant will select colours from a manufacturer’s full range of colours. Refer to Section 09 06 00, Finishes Schedule for identification and location of colours.

.2 Where required by authorities having jurisdiction, finish exit and vestibule doors in contrasting colour to walls and a different colour than any other door in the same area.

.3 Access doors, prime coated butts and other prime painted hardware, registers, radiators and covers, exposed piping and electrical panels: To match adjacent surfaces, unless otherwise noted or where pre-finished.

.4 Where other applied finishes and nosing are not specified at stairs, ramps and landings providing access and exit for persons with visual impairment, provide colour contrast slip resistant finish and warning strips at treads and landings.

2.5 **GLOSS AND SHEEN RATINGS**

.1 Paint gloss shall be defined as the sheen rating of applied paint, in accordance with the following MPI values:

Gloss Level	Description	Units@ 60 degrees	Units@ 85 degrees
G1	Matte or Flat finish	Max. 5	Max. 10
G2	Velvet finish	Max. 10	10 to 35
G3	Eggshell finish	10 to 25	10 to 35
G4	Satin finish	20 to 35	Min. 35
G5	Semi-Gloss finish	35 to 70	
G6	Gloss finish	70 to 85	
G7	High-Gloss finish	More than 85	

PART - 3 EXECUTION

3.1 CONDITION OF SURFACES

.1 Prior to commencement of work thoroughly examine and test as required conditions and surfaces scheduled to be painted. Do not commence work until adverse conditions and defects have been corrected and surfaces and conditions are acceptable to the Consultant.

3.2 SURFACE PREPARATION

.1 Prepare all surfaces in accordance with MPI requirements.

.2 Sand, clean, dry, etch, neutralize and test surfaces under adequate illumination, ventilation and temperature requirements.

.3 Remove and securely store miscellaneous hardware, surface fittings and fastenings such as electrical plates, mechanical louvers, door and window hardware, hinges, knobs, locks, trim, frame stops, removable rating/hazard/instruction labels, washroom accessories, light fixture trim, from wall and ceiling surfaces, doors and frames, prior to commencement of work. Carefully clean and replace items upon completion of work in each area. Do not use solvent or reactive cleaning agents on items that will mar or remove finishes. Remove doors to finish bottom and top edges and re-hang doors when work is complete.

.4 Protect all adjacent interior surfaces and areas, including rating/hazard/instruction labels on doors, frames, equipment, piping, from painting operations and damage using drop cloths, shields, masking, templates, or other suitable protective means and make good damages caused by failure to provide such protection.

.5 Make good substrate defects and sand ready for finishing particularly after the first coat is applied. Start of finishing on defective surfaces indicates acceptance of substrate and any costs of making good defects shall be borne by this Section including re-painting of entire defective surface.

.6 Confirm preparation and primer used with fabricator of steel items.

3.3 APPLICATION

.1 Do not perform work unless substrates are acceptable and until heating, ventilation, lighting and completion of work of other Sections are acceptable for applications of products.

.2 Apply materials in accordance with MPI Painting Manual Premium Grade finish and manufacturers' requirements.

.3 Work specified is intended to cover surfaces satisfactorily when applied at proper consistency and in accordance with manufacturer's recommendations.

.4 Tint each coat of finish progressively lighter to enable confirmation of number of coats.

.5 Unless otherwise approved by the Consultant, apply a minimum of four coats of paint where deep or bright colors are used to achieve satisfactory results.

.6 Sand between each coat to provide an anchor for next coat and to remove defects visible from a distance up to 1000 mm.

.7 Do not apply finishes on surfaces that are not sufficiently dry. Unless manufacturer's directions state otherwise, each coat shall be sufficiently dry and hard before a following coat is applied.

.8 Prime coat of stain or varnish finishes may be reduced in accordance with manufacturer's directions.

.9 Paint finish shall continue through behind all wall-mounted items.

.10 Unless noted otherwise, field-apply finish paint to all structural steel work, which will remain exposed and subject to normal view by pedestrians or occupants on the completed exterior or interior of the building.

3.4 **INTERIOR FINISHING SYSTEMS**

.1 Finish interior surfaces in accordance with MPI Painting Manual requirements:

.2 Galvanized Metal: Doors, frames, railings, misc. steel, pipes, overhead decking, ducts.

.1 INT 5.3M: High performance architectural latex G5 finish.

.3 Plaster and Gypsum Board:

.1 INT 9.2B: High performance architectural latex G5 finish.

3.5 **MECHANICAL, ELECTRICAL EQUIPMENT AND RELATED SURFACES**

.1 Unless otherwise specified or noted, finish all unfinished conduits, piping, hangers, ductwork and other mechanical and electrical equipment with color and texture to match adjacent surfaces, in the following areas:

.1 Where exposed-to-view in exterior and interior areas.

.2 In interior high humidity interior areas.

.3 In boiler room, mechanical and electrical rooms.

.2 In unfinished areas leave exposed conduits, piping, hangers, ductwork and other mechanical and electrical equipment in original finish and touch up scratches and marks.

.3 Touch up scratches and marks on factory finished equipment with products compatible with factory finish.

.4 Do not paint over nameplates.

.5 Paint the inside of all ductwork where visible behind louvers, grilles and diffusers for a minimum of 450 mm or beyond sight line, whichever is greater, with primer and one coat of flat black paint.

.6 Paint the inside of light valances gloss white.

.7 Paint disconnect switches for fire alarm system and exit light systems in red enamel.

.8 Paint or band all fire protection piping and sprinkler lines in accordance with mechanical specification requirements. Keep sprinkler heads free of paint.

.9 Paint or band all natural gas piping in accordance with mechanical specification requirements.

.10 Back prime and paint face and edges of plywood service panels for telephone and electrical equipment before installation to match adjacent wall surface. Leave equipment in original finish except for touch-up as required, and paint conduits, mounting accessories and other unfinished items.

3.6 **FIELD QUALITY CONTROL AND STANDARD OF ACCEPTANCE**

.1 Painted interior surfaces will be considered to lack uniformity and soundness if any of the following defects are apparent to the Consultant:

.1 Brush and roller marks, streaks, laps, runs, sags, drips, heavy stippling, hiding or shadowing by inefficient application methods, skipped or missed areas, and foreign materials in paint coatings.

.2 Evidence of poor coverage at rivet heads, plate edges, lap joints, crevices, pockets, corners and re-entrant angles.

.3 Damage due to touching before paint is sufficiently dry or any other contributory cause.

.4 Damage due to application on moist surfaces or caused by inadequate protection from the weather.

.5 Damage and/or contamination of paint due to blown contaminants (dust, spray paint, etc.).

.2 Painted surfaces will be considered unacceptable if any of the following are evident under natural lighting source for exterior surfaces and final lighting source (including daylight) for interior surfaces:

.1 Visible defects are evident on vertical and horizontal surfaces when viewed at normal viewing angles from a distance of not less than 1000 mm.

.2 Visible defects are evident on ceiling, soffit and other overhead surfaces when viewed at normal viewing angles.

.3 When the final coat on any surface exhibits a lack of uniformity of color, sheen, texture, and hiding across full surface area.

.3 Make good painted surfaces rejected by the Consultant and at the no extra cost to the Owner. Touch up small affected areas. Repaint large affected areas or areas without sufficient material dry film thickness. Remove runs, sags of damaged paint by scraper or by sanding prior to application of paint.

3.7 **PROTECTION**

.1 Protect interior surfaces and areas, equipment and any labels and signage from painting operations and damage by drop cloths, shields, masking, templates, or other suitable protective means and make good any damage caused by failure to provide such protection.

.2 Erect barriers or screens and post signs to warn of or limit or direct traffic away or around work area as required.

3.8 **CLEAN-UP**

.1 Remove paint where spilled, splashed, splattered or sprayed as work progresses using means and materials that are not detrimental to affected surfaces.

.2 Keep work area free from an unnecessary accumulation of tools, equipment, surplus materials and debris.

.3 Remove combustible rubbish materials and empty paint cans each day and safely dispose of same in accordance with requirements of authorities having jurisdiction.

.4 Clean equipment and dispose of wash water / solvents as well as all other cleaning and protective materials (e.g. rags, drop cloths, masking papers, etc.), paints, thinners, paint removers / strippers in accordance with the safety requirements of authorities having jurisdiction.

3.9 **EXISTING SURFACES**

.1 Finish or refinish existing surfaces of items or rooms where noted, including new work which has been incorporated into the existing work and existing work which has been damaged, altered or otherwise disturbed during renovation operations.

.2 Refinish surfaces or rooms adjacent to rooms where alterations or renovations have been carried out and which have been damaged or otherwise disturbed by the alterations or renovations. Where such damages occur, refinish completely.

.3 Remove from existing surfaces rust, scale, oil grease, mildew, chemicals and other foreign matters.

.4 If coatings on existing surfaces have failed so as to affect the proper performance or appearance of materials to be applied, or if such coatings can be easily removed, remove them and prepare the substrates properly. Dull hard or glossy surfaces by sanding, sandblasting or by other abrasive methods prior to finishing.

.5 Refinish surfaces entirely between changes of planes which have been incorporated into the existing work and existing work which has been damaged, altered or otherwise disturbed during renovation operations.

END OF SECTION

PART - 1 GENERAL

1.1 SUMMARY

.1 Section Includes:

.1 Labour, Products, equipment and services necessary to complete the work of this Section, including but not limited to:

.1 Wall coverings (WP)

.2 Corner guards (CG)

.3 Handrail

1.2 QUALITY ASSURANCE

.1 Installer: Trained and approved by the manufacturer and having a minimum three years experience in the installation of the work described in this Section and can show evidence of satisfactory completion of projects of similar size, scope and type. If requested, provide letter of certification from manufacturer stating that installer is certified applicator of its products, and is familiar with proper procedures and installation requirements required by the manufacturer.

.2 Maintenance seminars: Provide, to the Owner, training seminars and recommendations on Product maintenance procedures.

.3 Pre-installation meeting: Two weeks prior to commencing work of this Section, arrange for manufacturer's technical representative to visit the site and review preparatory and installation procedures to be followed, conditions under which the work will be done, and inspect the surfaces to receive the work of this Section. Advise the Consultant of the date and time of the meeting.

.4 Source limitations: Obtain each type of product from a single manufacturer.

.5 Products: Provide like Products from same production run. Install Products in sequence from sequentially numbered dye lots.

1.3 SUBMITTALS

.1 Samples: Three 300 mm x 300 mm samples of each wall covering material and three 300 mm long samples of handrail and chair rail.

.2 Maintenance data: Printed manufacturer's maintenance instructions giving specific warnings of maintenance practices of substances, which may stain or otherwise damage the wall coverings or handrails.

1.4 SAMPLE INSTALLATION

.1 Apply each type of covering to a sample area on the project and obtain the approval of the Consultant of such applications before proceeding. Locations of sample areas shall be as directed by the Consultant.

.2 Sample areas of wall covering shall be full height, as indicated on Drawings, and include one outside corner and one covering material joint.

.3 Sample areas of rail shall be full length, and include one outside corner, and one end cap.

.4 Promptly revise or replace coverings on sample areas at no additional cost to the Owner until approval of the Consultant is obtained. The approved sample area installations shall be the standard for acceptance of the remaining work.

1.5 **STORAGE**

.1 Store materials with manufacturer's seals and labels intact. Store materials flat in clean, dry storage area at temperatures over 10 deg C and normal humidity.

1.6 **PROJECT CONDITIONS**

.1 Environmental Limitations: Do not commence work until spaces are enclosed and weatherproof, wet work in spaces is complete and dry, work above ceilings is complete, and ambient temperature and humidity conditions are maintained at the levels indicated for Project when occupied for its intended use.

.2 Lighting: Do not commence work until a lighting level of not less than 160 lux is provided on the surfaces to receive wall covering.

.3 Ventilation: Provide continuous ventilation during installation and for not less than the time recommended by wall covering manufacturer for full drying or curing.

1.7 **EXTRA STOCK**

.1 Provide minimum 5% of each type and colour of wall covering and handrail material in unopened packages, and accessories installed. Store the extra materials at locations as directed by the Owner. Extra stock shall be of same production run as installed materials.

PART - 2 PRODUCTS

2.1 **MATERIALS**

.1 Basis of Design: Refer to Section 00 01 30 List of Materials, for complete list of corner guards and protective wall covering products, designations, manufacturers, sizes, finishes and colours.

.2 Aluminum Retainers: Extruded aluminum retainers 6063-T6 alloy, nominal 0.62” thick. Minimum strength and durability properties as per ASTM B221. Supplied by manufacturer.

.3 Fasteners: non corrosive and compatible with aluminium retainers supplied by manufacturer.

.4 Adhesive: Mildew resistant, nonstaining, strippable adhesive, for use with specific wall covering and substrate application, as recommended in writing by wall covering manufacturer.

.5 Primer/Sealer: Mildew resistant primer/sealer, and recommended in writing by wall covering manufacturer for intended substrate.

.6 Sealant: antimicrobial, 100% silicone sealant.

2.2 **ACCESSORIES**

.1 Wall covering and rails manufacture to supply a packaged system, containing all materials needed to complete wall covering and crash rails design.

.2 Supply all primers and adhesive required to install wall coverings, as per manufacturer’s recommendations.

PART - 3 EXECUTION

3.1 INSPECTION

.1 Examine areas, which are to receive the work of this Section and proceed only if conditions are satisfactory. Verify adequacy of support at substrate. Report unsuitable substrates. Commencement of work shall imply acceptance of conditions.

.2 Substrates shall be smooth, dry, free of dust and dirt.

3.2 PREPARATION

.1 Remove materials from packaging and acclimatize materials in the installation areas not less than 24 hours before installation.

.2 Test surfaces for moisture and alkali content prior to application of materials. Moisture content shall be less than 4%. Neutralize and seal surfaces in accordance with manufacturer's directions.

.3 Where substrate has been painted, apply a thin coat of adhesive over substrate and allow drying for one hour.

.4 Comply with manufacturer's written instructions for surface preparation.

.5 Clean substrates of substances that could impair wall covering's bond, including mold, mildew, oil, grease, incompatible primers, dirt, and dust.

.6 Prepare substrates to achieve a smooth, dry, clean, structurally sound surface free of flaking, unsound coatings, cracks, and defects.

.7 Remove hardware and hardware accessories, electrical plates and covers, light fixture trims, and similar items.

3.3 INSTALLATION – WALL COVERINGS

.1 Apply materials in strict accordance with manufacturer's instructions and as specified; report discrepancies immediately to Consultant.

.2 Install materials free from tears, ripples or air pockets. Horizontal joints in wall covering are not permitted except upon specific, written approval of the Consultant.

.3 Take special care to prevent plaster particles, grit, dirt, or other extraneous matter from being imbedded beneath the wall covering.

.4 Spread adhesive in a uniform coat to back of material and apply material to wall within time recommended by adhesive manufacturer. Thoroughly wash excessive adhesive off material and adjacent surfaces as application progresses.

.5 On gypsum board construction, avoid scoring gypsum board face by using a metal strip cutting base.

.6 Neatly and carefully trim around fixtures, door frames and the like, as indicated on Drawings.

.7 Match adjacent panels for colour, pattern, texture and direction of nap where applicable. All panels shall be uniform in colour and texture. Remove material, which fails to match when applied, and replace with matching material.

.8 Reinstall hardware and hardware accessories, electrical plates and covers, light fixture trims, and similar items.

3.4 **INSTALLATION – HAND RAILS**

.1 Apply materials in accordance with manufacturer's instructions.

.2 Install aluminum crash rail retainer to platform bracket base with fasteners, supplied by the manufacturer.

.3 Snap on crash rail cover overtop of retainer.

.4 Install end caps and corners where required, and as shown on Drawings.

.5 All covers shall be uniform in colour and texture. Remove material, which fails to match when applied, and replace with matching material.

.6 Reinstall hardware and hardware accessories, electrical plates and covers, light fixture trims, and similar items, if removed to install handrail.

3.5 **INSTALLATION – CORNER GUARDS**

.1 Install work in accordance with manufacturer’s written installation instructions and as shown on drawings.

3.6 **PATCHING**

.1 Perform cutting, fitting and patching of wall covering material as required to accommodate fixtures, railing brackets and other appurtenances occurring in surfaces to receive coverings. Maintain covering pattern regardless of position of appurtenances.

3.7 **CLEANING**

.1 Immediately upon completion of installation, clean wall covering and accessories in accordance with manufacturers recommended cleaning method.

.2 Remove surplus materials, and debris upon completion or work.

END OF SECTION

PART - 1 PRODUCTS

1.1 SUMMARY

.1 Section Includes:

.1 Labour, Products, equipment and services necessary to complete the work of this Section in accordance with the Contract Documents. The work of this Section includes but is not limited to:

.1 Washroom accessories

1.2 QUALITY ASSURANCE

.1 Source Limitations: Provide like products of same manufacturer unless otherwise approved by Consultant.

1.3 SUBMITTALS

.1 Shop Drawings: Indicate materials, products and finishes and showing in large scale detail the construction, reinforcing, anchorage and, where permitted, the location of exposed fastenings.

.1 Submit engineered shop drawings

.2 Maintenance data: Three copies of a list of the accessories requiring supplies together with names and addresses of local distributors of the supplies.

.3 Samples for Verification: Full size, for each accessory item to verify design, operation, and finish requirements. Approved full-size Samples will be returned and may be used in the Work.

.4 Product Schedule: Indicating types, quantities, sizes, and installation locations by room of each accessory required.

.1 Identify locations using room designations indicated on Drawings.

.2 Identify products using designations indicated on Drawings.

1.4 CLOSEOUT SUBMITTALS

.1 Operation and Maintenance Data: Provide maintenance data for toilet and bath accessories for incorporation into manual.

1.5 MAINTENANCE MATERIAL SUBMITTALS

.1 Tools

.1 Provide special tools required for assembly, disassembly or removal for toilet and bath accessories.

.2 Deliver special tools to Contracting Authority.

1.6 DELIVERY, STORAGE AND HANDLING

.1 Carefully wrap accessories ensuring protection during shipping and storage.

.2 Store accessories inside the building in the location directed, and so that their identification is readily visible, and in the general order in which they will be required for installation.

1.7 **COORDINATION**

.1 Coordinate accessory locations with other work to prevent interference with clearances required for access by people with disabilities, and for proper installation, adjustment, operation, cleaning, and servicing of accessories.

.2 Deliver inserts and anchoring devices set into concrete or masonry as required to prevent delaying the Work.

PART - 2 PRODUCTS

2.1 **ACCEPTABLE MANUFACTURERS**

.1 Basis of Design: Accessories specified are based on Products by Bobrick Washroom Equipment of Canada, except where specifically specified otherwise.

.1 Products by other manufacturers similar in function, design, performance, and construction complying with requirements of this Section may be incorporated into the Work subject to Consultant's acceptance, in accordance with Section 01 25 13, Product Substitution Procedures.

.2 Provide accessories for the Work from one manufacturer unless specified otherwise.

2.2 **MATERIALS**

.1 Sheet steel: To ASTM A653/A653M-11 with ZF001 designation zinc coating.

.2 Stainless steel: ASTM A167-99 (2009), type 304, with BA finish.

.3 Stainless Steel Tubing: Type 304, commercial grade, seamless welded, 1.2 mm wall thickness.

.4 Supply for installation under other Sections, mounting devices and reinforcement required to be built-in for support of grab bars and imposed loads. Be responsible for giving proper notice to other Sections and supplying such reinforcement when required by other Sections for building in.

.5 Concealed screws and bolts hot dip galvanized, exposed fasteners to match face of unit. Expansion shields fibre, lead or rubber as recommended by accessory manufacturer for component and its intended use.

.6 For mental health areas use tamper resistant fasteners, hexalobular conforming to ISO 10664 or other tamper resistant fastener design as accepted by Consultant.

2.3 **FABRICATION**

.1 Fabricate accessories true, square, rigid, free from distortion and from defects detrimental to appearance and performance.

.2 Butt visible joints straight and accurate. Mitre corner joints.

.3 Except as otherwise specified, fabricate accessories for concealed mounting by non-corrosive metal, expansion type, toggle type or other approved type of positive, mechanical anchors to suit the construction to which the accessory is to be mounted.

.4 Exposed fasteners, where permitted, shall be finished to match the adjacent accessory surface, and shall be countersunk. Where accessories are to be mounted to sheet metal, provide a 3 mm thick minimum full-size metal back-up plate drilled and tapped to receive machine screws and finished to match the adjacent sheet metal surface.

.5 Where specified as frameless, provide accessories in one piece fronts with 90 degree formed returns at their edges and openings. Continuously weld returns and ground smooth at the corners.

.6 Where accessory fronts are framed, frame edges, both inside and outside, shall have 90 degree formed returns continuously welded and ground smooth at the corners. Doors shall also have 90 degree formed returns as specified.

.7 Provide full length concealed stainless steel piano hinges. Hinged elements shall have concealed, mechanically-retained, rubber bumpers for silent closing, and shall close flush with faces of fronts or frames.

.8 Unless otherwise specified, portions of sheet metal accessory interiors which are visible in the completed work shall be stainless steel. Changes in plane shall be formed or continuously welded and ground smooth.

.9 Sheet metal accessory parts concealed in the finished installation shall be galvanized sheet steel.

.10 Hem edges of sheet metal accessible by users or maintenance personnel.

.11 Accessories for flange-type mounting shall have forged brass, full flanges drilled and countersunk for three mounting fasteners. Fix flanges to tubes using solid silver soldering.

.12 Back paint components where contact is made with building finishes to prevent electrolysis.

.13 Shop assemble components and package complete with anchors and fittings.

.14 Deliver inserts and rough-in frames to job site at appropriate time for building-in. Provide templates, details and instructions for building in anchors and inserts.

.15 Provide steel anchor plates and components for installation on studding and building framing.

.16 Engrave lettering on accessories to a depth of minimum 0.254 mm. Size, location and type face of lettering to selection by Consultant. Maintain engraving edges straight and sharp.

2.4 **ACCESSORIES**

.1 Refer to Section 00 01 30 List of Materials for additional manufacturer and product information.

.2 Soap Dispenser (SD): Counter-mounted plastic valve equipped with stainless steel spring to dispense liquid and lotion soaps, and synthetic detergents, complete with stainless steel piston and spout assembly, escutcheon locks to body with concealed locking mechanism with special key to open, B-822 by Bobrick,.

.3 Coat hook (CH): surface mount, double robe hook, stainless steel, B-76727 by Bobrick,. Provide one per barrier-free stall and all barrier-free washrooms on back of door.

.4 Toilet paper holder (PTD): surface-mount, two rolls, second roll to automatically drop in place, theft-resistant, heavy duty spindles, stainless steel, B-2860 by Bobrick,.

.5 Waste Receptacle (WR): recessed 18-8S, type 304 stainless steel with satin finish, minimum 102 mm required deep recess, consisting of cabinet, flange and waste receptacle. One piece seamless flange construction. Waste receptacle exposed edges hemmed for safe handling. secured to cabinet with tumbler lock keyed to match other washroom accessories. Capacity of minimum 454 litres. B-3644 by Bobrick.

2.5 **FINISHES**

.1 Where steel is specified as having a chrome plated finish, pretreat including mechanical removal of imperfections and buffing, degreasing, removal of degreaser, electrolytic cleaning, intermediate treatments of acid washes and cold water rinses in preparation for and to suit plating, nickel plating pretreatment, nickel plating, hard chromium plating with a final hot water rinse.

.2 Finish stainless steel to a standard No. 4 mechanical finish. Where possible, arrange sheet stainless steel so that the grain of the finish runs vertically in the finished installation.

.3 Manufacturer's or brand names on face of units not acceptable.

PART - 3 EXECUTION

3.1 **INSTALLATION**

.1 Install and secure accessories rigidly in place.

.2 Stud walls: Provide steel back-plate to stud prior to gypsum board finish. Provide plate with threaded studs or plugs.

.3 Hollow masonry units or existing gypsum board: Use toggle bolts drilled into cell/wall cavity.

.4 Install grab bars on built-in anchors provided by manufacturer.

.5 Fill units full with necessary supplies shortly before Substantial Performance.

END OF SECTION

PART - 1 GENERAL

1.1 SUMMARY

.1 Section Includes: Labour, Products, equipment and services necessary to complete the work of this Section

1.2 SUBMITTALS

.1 Product data sheets:

.1 Submit manufacturer's Product data sheets for Products proposed for use in the work of this section.

.2 Shop drawings:

.1 Submit engineered shop drawings.

.2 Indicate dimensions, materials, layout, attachment methods, trims and locations of openings, and related work.

.3 Indicate layout of radiation-protected areas.

.4 Indicate lead thickness or lead equivalencies of components.

.5 Indicate anchorage, wall support and framing systems.

.3 Certifications:

.1 Submit written certification of source of supply (including purchase orders and chain of supply/custody), as well as physical properties of materials (from a third party testing laboratory) for confirmation and review of authorities having jurisdiction and Hospital Radiation Protection Officer.

.4 Photographic record:

.1 Submit complete photographic record of each type of lead material installation.

.2 Photographic record shall be done prior to installation of finish materials or covering of the work of this section.

.3 Submit 3 copies of photographic record of finished installation in each location.

1.3 CLOSEOUT SUBMITTALS

.1 Maintenance Instructions:

.1 Submit maintenance instructions for incorporation in operation and maintenance manuals.

1.4 QUALITY ASSURANCE

.1 Retain a Professional Engineer registered in the Site to design the work of this section; to prepare, seal and sign shop drawings, including review of existing studs and any required modifications thereof; and to perform field review. Shop drawings shall show both design and installation requirements.

.2 Execute the work of this section only by a Subcontractor who has adequate plant, roll forming machinery, equipment, and skilled workers to perform it expeditiously, and is known to have been responsible for satisfactory installations similar to that specified during a period of at least the immediate past 5 years.

.3 Mock-ups:

.1 Construct mock-ups in locations as indicated by Consultant, provide typical installation of each type, complete with lead shielding, including window frame and partition junction, and electrical box and pipe intrusions. Modify mock-ups as directed and as required to obtain approval of the Consultant.

.2 Do not proceed with remainder of installation until mock-up installation has been reviewed and accepted by Consultant.

.3 Accepted mock-up may become a part of the final Work.

PART - 2 PRODUCTS

2.1 ACCEPTABLE MANUFACTURERS

.1 Acceptable manufacturers: Unless otherwise indicated.

.1 MarShield - Division of Mars Metal Company.

.2 Mayco Industries, Inc.

.3 Nelco.

.4 Pitts Little Corporation.

.5 Ray-Bar Engineering Corporation.

2.2 DESIGN REQUIREMENTS

.1 Radiation shielding shall meet the requirements of the Contract Documents, of authorities having jurisdiction, and of Hospital Radiation Protection Officer.

.2 Supports and support framing for lead Products shall be designed to withstand loads, without deflection that might impair the continuity of radiation protection.

.1 Supports and support framing shall maintain lead Products in place without any vertical slip movement or displacement of the lead Products due to the weight of the lead.

.3 Design radiation shielding to provide equivalent thickness in any straight line with no gaps in system.

.4 Seismic restraint: Design and install radiation protection systems, including support framing, and fastening and anchoring systems, to withstand the effects of earthquake motions in accordance with building code.

2.3 GENERAL

.1 Provide reinforcing, fastenings, and anchorage required for building-in of Products.

.2 Specified materials are minimum acceptable quality. Manufacturer’s standards exceeding specified quality shall be accepted.

2.4 MATERIALS

.1 Interlocking Lead Brick: Interlocking, tongue and groove lead bricks constructed from 99.9% pure unpierced virgin lead, free from dross, oxide inclusions, scale, laminations, blisters, and cracks, to ASTM B749 and ASTM B29.

.1 Thickness: as required to meet applicable codes and standards and as indicated on Drawings.

.2 Variation in thickness: Not to exceed 3%.

.2 Lead plate: 99.9% pure virgin lead, free from dross, oxide inclusions, scale, laminations, blisters and cracks, to ASTM B749.

.1 Thickness: as required to meet applicable codes and standards.

.2 Variation in thickness: Not to exceed 3%.

.3 Borated HDPE Panels: 5% borated polyethylene neutron shielding panels by MarShield or approved equivalent:

.1 Performance Requirements:

.1 Density: min 0.91 g/cc to ASTM D1505

.2 Tensile Strength: > 500% to ASTM D638.

.3 Elongation: > 1400 psi to ASTM D638.

2.5 **ACCESSORIES**

.1 Screw fasteners: Type S bugle head, length as required.

.2 Lead strips: 51 mm (2”) wide, unless indicated otherwise, by same thickness as sheet lead laminated on concrete, gypsum board and plywood.

.3 Lead angles: Leak-proof, lead angle system providing complete coverage of gamma rays used in lieu of lead strips and lead discs where sheet lead thickness is greater than 3 mm (1/8”) thick.

.4 Lead discs: 9.5 mm (3/8”) diameter lead discs for use with screw heads.

.5 Adhesive: Acceptable to radiation protection Product manufacturer and capable of adhering lead sheets where required.

2.6 **LEAD LABELS**

.1 Lead labels:

.1 Type 1: Lead label 15.9 mm x 50 mm x 0.635 mm (5/8” x 2” x 24 gauge) stainless steel plate with edges ground smooth. Stamp lead thickness on plate with minimum 3.2 mm (1/8”) high lettering. Secure plates with stainless steel screws to lead lined building components in locations as directed by Consultant.

.2 Type 2: Lead label 50 mm x 100 mm x 0.635 mm (2” x 4” x 24 gauge) stainless steel plate with edges ground smooth. Stamp lead thickness on plate with minimum 9.5 mm (3/8”) high lettering. Secure plates with stainless steel screws to wall containing lead in locations as directed by Consultant.

PART - 3 EXECUTION

3.1 **EXAMINATION**

.1 Verification of conditions:

.1 Examine areas and conditions under which work of this section is to be performed and identify conditions detrimental to proper or timely completion.

.2 Do not proceed until unsatisfactory conditions have been corrected.

3.2 **COORDINATION**

.1 Refer to mechanical, electrical and plumbing drawings for utility penetrations and shielding.

.2 Items furnished by other sections for installation into this section shall be installed in accordance with the requirements of such other sections, providing such requirements do not violate the shield.

.3 Items furnished by this section for installation into the work of other sections shall be furnished sufficiently early to the proper section for timely installation.

.4 Perform work of this section in proper sequence with the work of other sections and trades and in strict conformance with the reviewed shop drawings.

.5 Coordinate as required with other trades to assure proper and adequate provision in the work of those trades that interface with the work of this section.

3.3 **INSTALLATION**

.1 Shielding shall be continuous within its limits, with soldered seams, where other work, materials or accessories penetrate the shielding, all penetrations must be approved by shielding Subcontractor.

.2 Installation shall be by the manufacturer's field installation technicians.

.3 Supplier shall provide information and templates required for installation of the work of this section, and assist or supervise, of both, the setting of anchorage devices, and construction of other work incorporated with products specified in this section in order that they function as intended.

.4 Install work to meet manufacturer's recommended specifications, true, tightly fitted, and level or flush to adjacent surfaces, as suitable for installation.

.5 Provide lead sheet envelope to enclose back and sides of all items and equipment recessed in solid masonry walls, and in locations so noted. Form lead so as not to reduce the effective thickness at any location. Lead shall not be pierced for fastenings unless essential and pierced areas shall be covered with sheet lead lapped to ensure continuity of protection.

.6 Cabinets, pipes, conduits or any other materials built-in to, or projecting through, lead lining shall be shielded with 1.6 mm (1/16") thick sheet lead. Overlap sheets a minimum of 50 mm (2").

.7 Complete room installation shall provide a continuous uninterrupted membrane protection to heights and areas indicated and be free of holes, cracks or areas of penetration by radiation.

.8 Tightly stack lead bricks and ensure lead bricks are securely seated inside the built in keyway and no gaps are present. Gaps between lead bricks will not be permitted.

3.4 **INSTALLATION – PENETRATION ITEMS**

.1 Provide lead shields to maintain continuity of protection at penetrations of lead linings.

.2 Provide lead linings, sleeves, shields, and other protection in thickness not less than that required in assembly being penetrated.

.3 Cut wall penetration covers from lead sheet of equal or greater thickness than backing on adjacent wall panels. Cut wall penetration covers to size required to cover wall penetrations with laps 25 mm (1") minimum wide.

.4 Adhesive-apply lead sheet penetration covers on penetrating boxes and raceways and return penetration covers to backside of lead-backed wall panels with 25 mm (1") minimum laps.

.5 Do not use penetrating fasteners unless indicated otherwise.

.6 Outlet boxes and conduit: Install between studs using steel telescoping mounting brackets. Cover or line with lead sheet lapped over adjacent lead lining at least 25 mm (1"). Wrap conduit with lead sheet for a distance of 250 mm (10") from box.

3.5 **INSTALLATION – WALL PENETRATION COVERS**

.1 Duct penetrations; with 8 psf or less of lead sheet:

.1 Wrap ducts with wall penetration covers, lapping lead joints 25 mm (1”) minimum.

.2 Secure lead sheet in place with 25 mm (1”) minimum width steel bands spaced not more than 305 mm (12”) on centre.

.3 Do not cut into lead sheet with tightening steel bands.

.2 Duct penetrations; with greater than 8 psf of lead sheet and where duct shielding exceeds 610 mm (24”) in width:

.1 Laminate wall penetration covers to plywood or other similar structural panels conforming to shape of duct, lapping lead joints 25 mm (1”) minimum.

.2 Secure lead laminated panels to ducts with mechanical fasteners located at duct seams and corners.

.3 Where necessary to prevent lead laminated panels from overloading duct supports, independently suspend panels from hangers secured to overhead building structure.

.4 Cover fastener heads with lead sheet matching thickness of adjacent lead.

.3 Piping: Unless indicated otherwise, wrap piping with lead sheet for 250 mm (10”) from point of penetration.

3.6 **CLEANING AND ADJUSTMENT**

.1 Immediately remove all spots, smears, stains, residues, adhesives, etc., from work of this section and/or upon adjacent areas or surfaces which result from the work of this section.

.2 Upon completion of the work of this section, dispose of all debris, trash, containers, residue, remnants and scraps which result from the work of this section.

.3 Check and readjust operating hardware items, leaving frames undamaged and in proper operating condition.

.4 Leave exposed surfaces ready for site finishing.

3.7 **PROTECTION**

.1 Protect work of this section against damage, should damage occur prior to Substantial Performance of the Work, it shall be removed and replaced at no additional expense to the Owner.

.2 Lock radiation-protected rooms once doors hardware is installed. Limit access to only those persons performing Work in radiation-protected rooms or as directed by the Owner.

.3 Tape temporary paper signs on radiation-resistant walls with the following text:

.1 "Radiation Shielded Assembly - Do not make penetrations or mount equipment on this wall without prior approval of the Owner".

3.8 **FIELD QUALITY CONTROL**

.1 Coordinate field reviews of installations for review by Consultant and the Hospital Radiation Protection Officer before building-in finishes, enclosing, or covering the work of this section.

.2 The Owner will initiate radiation leakage testing by Ministry of Health, Radiation Inspection Service, Institutional Services Branch.

.3 If tests reveal radiation leakage, Contractor shall make remedial repairs to ensure a leak-free installation at no additional cost to the Owner.

.4 Manufacturer and Independent inspection and testing company shall attend the pre-installation meeting.

END OF SECTION

“ISSUED FOR TENDER-PERMIT”

MECHANICAL AND ELECTRICAL SPECIFICATIONS

OCTOBER 1, 2025

THE HOSPITAL FOR SICK CHILDREN NUCLEAR MEDICINE SPECT CT

Consultant: Quasar Consulting Group
250 Rowntree Dairy Rd.
Woodbridge, ON, L4L 9J7
Tel: 905.507.0800
Fax: 905.507.0081
Web: www.quasarcg.com

Quasar Project No. HC-21-129
SickKids Project No. AR 21-014

PROCUREMENT AND CONTRACTING REQUIREMENTS GROUP

Division 00 Procurement and Contracting Requirements

Introductory Information

00 01 01 Project Title Page
00 01 10 Table of Contents

Procurement Requirements

Not Used

Contracting Requirements

Not Used

SPECIFICATIONS GROUP

GENERAL REQUIREMENTS SUBGROUP

Not Used

FACILITY CONSTRUCTION SUBGROUP

Not Used

FACILITY SERVICES SUBGROUP

Division 20 to Division 19

Not Used

Division 20 Common Mechanical Requirements

20 05 00 Common Work Results for Mechanical
20 05 05 Selective Demolition for Mechanical
20 05 10 Mechanical Work General Instructions
20 05 13 Common Motor Requirements for Mechanical Equipment
20 05 13.13 Variable Frequency Drives for Mechanical Equipment
20 05 17 Sleeves and Sleeve Seals for Mechanical Piping
20 05 19 Meters and Gauges for Mechanical Systems
20 05 29 Hangers and Supports for Mechanical Piping and Equipment
20 05 33 Heat Tracing for Mechanical Piping
20 05 48.13 Vibration Controls for Mechanical Systems
20 05 53 Identification for Mechanical Piping and Equipment
20 05 93 Testing, Adjusting, and Balancing for Mechanical Systems
20 07 00 Mechanical Systems Insulation
20 08 00 Commissioning of Mechanical Systems

Division 21

Not Used

Division 22 Plumbing

22 11 00 Facility Water Distribution
22 13 00 Facility Sanitary Sewerage
22 43 00 Healthcare Plumbing Fixtures
22 60 00.70 Gas and Vacuum Systems for Healthcare Facilities

Division 23 Heating, Ventilating, and Air Conditioning

23 21 00 Hydronic Piping and Pumps
23 22 00 Steam and Condensate Piping and Pumps
23 25 00 HVAC Water Treatment

23 30 00 HVAC Air Distribution
23 33 19 Duct Silencers
23 34 00 HVAC Fans
23 40 00 HVAC Air Cleaning Devices
23 75 00 Custom Air Handling Units
23 82 16 Air Coils
23 84 00 Humidity Control Equipment

Division 24
Not Used

Division 25 Integrated Automation
25 05 01 Automatic Control Systems
25 05 02 Building Automation System

Division 26 Electrical
26 05 00 Common Work Results for Electrical
26 05 05 Selective Demolition for Electrical
26 05 19 Low-Voltage Electrical Power Conductors and Cables
26 05 26 Grounding and Bonding for Electrical Systems
26 05 29 Hangers and Supports for Electrical Systems
26 05 33.13 Conduit for Electrical Systems
26 05 33.16 Boxes for Electrical Systems
26 05 44 Sleeves and Sleeve Seals for Electrical Raceways and Cabling
26 05 44.13 Firestopping for Electrical Systems
26 05 48.16 Seismic Controls for Electrical Systems
26 05 53 Identification for Electrical Systems
26 05 73.16 Coordination Studies
26 05 73.19 Arc-Flash Hazard Analysis
26 05 83 Wiring Connections
26 09 23 Lighting Control Devices
26 12 16 Dry-Type, Medium-Voltage Transformers
26 22 13 Low-Voltage Distribution Transformers
26 24 16 Panelboards
26 27 26 Wiring Devices
26 28 00 Low Voltage Circuit Protective Devices
26 28 16.02 Molded Case Circuit Breakers
26 28 16.16 Enclosed Switches
26 50 00 Lighting
26 51 19 LED Interior Lighting

Division 27 Communications
27 05 00 Common Work Results for Communications
27 05 28 Pathways for Communications Systems
27 05 29 Hangers and Supports for Communications Systems
27 05 44 Sleeves and Sleeve Seals for Communications Pathways and Cabling
27 05 53 Identification for Communications Systems
27 15 13 Communications Copper Horizontal Cabling
27 52 23.13 Nurse Call Systems

Division 28 Electronic Safety and Security
28 01 80.71 Revisions and Upgrades of Fire Detection and Alarm
28 10 00.00 Access Control System

Division 29
Not Used

SITE AND INFRASTRUCTURE SUBGROUP

Not Used

PROCESS EQUIPMENT SUBGROUP

Not Used

END OF DOCUMENT

PART 1 - GENERAL

1.1 SECTION INCLUDES

.1 This Section specifies products, criteria and characteristics, and methods and execution that are common to one or more Sections of Mechanical Divisions. It is intended as a supplement to each Section and is to be read accordingly.

1.2 REFERENCES

.1 Division 00 and Division 01 apply to and are a part of each Mechanical Division:

.1 Division 20 – Common Mechanical Requirements;

.2 Division 22 – Plumbing;

.3 Division 23 – Heating, Ventilating, and Air Conditioning;

.4 Division 25 – Integrated Automation.

1.3 SUBMITTALS

.1 Submit shop drawings/product data sheets for:

.1 pressure gauges and thermometers;

.2 electric motors (submit with equipment they are associated with).

.2 Submit weight loads for selected equipment (upon request).

.3 Submit a list of equipment identification nameplates indicating proposed wording and sizes.

.4 Submit a list of pipe and duct identification colour coding and wording.

.5 Submit a proposed valve tag chart and a list of proposed valve tag numbering and identification wording.

.6 Submit any other submittals specified in this Section or other Sections of Mechanical Divisions.

1.4 MAINTENANCE MATERIAL SUBMITTALS

.1 As specified in Part 2 of this Section, submit a spare belt set, tagged, and identified, for each belt driven piece of equipment.

PART 2 - PRODUCTS

2.1 FIRESTOPPING AND SMOKE SEAL MATERIALS

.1 Firestopping and smoke seal system materials for mechanical penetrations through fire rated construction are specified in Section 20 05 17 - Sleeves and Sleeve Seals for Mechanical Piping, and work is to be done as part of mechanical work unless otherwise specified in Division 07.

2.2 ACCESS DOORS

.1 Refer to Section 08 31 00.

.2 Provide all access doors required for Mechanical work unless otherwise specified in Division 08. Coordinate consistency of look and finish of access doors on project with each Division of Work. Coordinate exact requirements with General Trades Contractor.

.3 Access doors to be rust resistant steel door panels, with concealed hinges and positive locking and self-opening screwdriver operated lock. Wall type frame to be suitable for wall installation and have

integral keys for plaster walls. Doors in tile wall to be stainless steel and in ceilings to be suitable for plaster covering with only frame joint showing. Other doors to be prime painted steel.

.4 Size access doors to suit the concealed work for which they are supplied, and wherever possible they are to be of standard size for all applications, but in any case they are to be minimum 300 mm x 300 mm (12" x 12") for hand entry and 600 mm x 600 mm (24" x 24") for body entry.

.5 Lay-in type tiles, properly marked, may serve as access panels. Coordinate marking of ceiling tiles with the Consultant. Panels in glazed tile walls to be 12 gauge, 304 alloy stainless steel, No. 4 finish, with recessed frame secured with stainless steel counter-sunk flush head screws.

.6 Panels in plaster surfaces to have dish-shaped door and welded metal lath, ready to take plaster. Provide a plastic grommet for door key access.

.7 Other access doors to be welded 12 gauge steel, flush type with concealed hinges, lock and anchor straps, complete with factory prime coat. Submit to Consultant for review, details of non-standard door construction details.

.8 Access doors in fire rated ceilings, walls, partitions, structures, etc., to be ULC listed and labelled and of a rating to maintain fire separation integrity.

.9 Where access doors are located in surfaces where special finishes are required, they are to be of a recessed door type capable of accepting finish in which they are to be installed so as to maintain final building surface appearance throughout.

.10 Manufacturers:

.1 SMS.

.2 Bauco.

.3 Acudor.

2.3 FLEXIBLE PIPING CONNECTORS

.1 Double wall stainless steel flexible connectors for piping connections to vibration isolated equipment, each selected by manufacturer to suit the application. Shop drawings or product data sheets must indicate construction and performance requirements that suit the application.

.2 Manufacturers:

.1 Hyspan Precision Products Inc.;

.2 Senior Flexonics Ltd.;

.3 The Metraflex Co.

PART 3 - EXECUTION

3.1 GENERAL PIPING AND DUCTWORK INSTALLATION REQUIREMENTS

.1 Unless otherwise specified, locate, and arrange horizontal pipes and ducts above or at ceiling on floors, arranged so that under consideration of all other work in area, maximum ceiling height and/or usable space is maintained. If required to maintain ceiling heights, reroute and/or resize ductwork, with Consultant’s approval.

.2 Unless otherwise specified, install work concealed in finished spaces, and concealed to degree possible in partially finished and unfinished spaces. Refer to and examine Architectural drawings and room finish schedules to determine finished, partially finished, and unfinished areas. Walls which are painted are considered finished.

.3 Install pipes and ducts parallel to building lines and to each other.

.4 Neatly group and arrange exposed work.

.5 Locate work to permit easy access for service or maintenance as required and/or applicable. Locate valves, dampers and any other equipment which will or may need maintenance or repairs and which are to be installed in accessible construction so as to be easily accessible from access doors. Where valves, dampers and similar piping or ductwork accessories occur in vertical services in shafts, pipe spaces or partitions, locate accessories at floor level.

.6 Make connections between pipes of different materials using adapters suitable for application. Provide cast brass dielectric type adapters/unions at connections between ferrous and copper pipe.

.7 Comply with equipment and material manufacturer's installation instructions unless otherwise specified herein or on drawings, and unless such instructions contradict governing codes and regulations.

.8 Carefully clean ducts, pipe and fittings prior to installation. Temporarily cap or plug ends of pipe, ducts and equipment which are open and exposed during construction.

.9 Install piping and ductwork which are to be insulated so that they have sufficient clearance to permit insulation and finish to be applied continuously and unbroken around pipe or duct, except for ductwork at fire barriers, in which case insulation will be terminated at each side of the duct fire damper.

.10 Inspect surfaces and structure prepared by other trades before performing work. Verify surfaces or structure to receive work has no defects or discrepancies which could result in poor application or cause latent defects in installation and workmanship. Report defects in writing. Installation of work will constitute acceptance of such surfaces as being satisfactory.

.11 Any ferrous piping that exhibits in excess of 5% surface rust, either inside or outside or both, is to be wire brush cleaned to bare metal and coated with suitable primer. Steel pipe, fittings and accessories are to be free of corrosion and dirt when work is complete or prior to being concealed from view. Where dirt is evident, clean piping prior to being concealed.

.12 Provide continuous galvanized sheet metal drip pan under drain, water and water solution piping extending through rooms with electrical equipment such as electrical, elevator equipment and transformer rooms, and other spaces provided primarily for the installation of electrical equipment. Drip pans are to be complete with a drain pipe connection and drain piping is to be extended to closest drain.

.13 For factory applied finishes, repaint or refinish surfaces damaged during shipment and installation. Quality of repair work is to match original finish. This requirement also applies to galvanized finishes.

.14 Where mechanical work is located in high humidity areas where ferrous metal products will be subject to corrosion and protection for such products is not specified, provide finishes on products to protect against corrosion or provide products which will not corrode in the environment, i.e. aluminium ductwork, copper or stainless steel pipe, etc.

.15 Provide screwed unions or flanges in piping connections to equipment and in regular intervals in long (in excess of 12 m (40')) piping runs to permit removal of sections of piping.

.16 Unless otherwise specified and except where space limitations do not permit, piping elbows are to be long radius. Eccentric reducers are to be installed with straight side at top of piping.

3.2 PIPE JOINT REQUIREMENTS

.1 Do not make pipe joints in walls or slabs.

.2 Ream piping ends prior to making joints.

.3 Properly cut threads in screwed steel piping and coat male threads only with Teflon tape or paste, or an equivalent thread lubricant. After pipe has been screwed into fitting, valve, union, or piping accessory, not more than 2 pipe threads are to remain exposed.

.4 Site bevel steel pipe to be welded or supply mill bevelled pipe. Remove scale and oxide from bevels and leave smooth and clean. Use factory made welding tees or welding outlet fittings for piping

branches off mains. Do not use shop or site fabricated fittings unless written approval has been obtained.

.5 Welded joints are to be made by CWB certified licensed journeyman welders qualified in accordance with CSA B51, Boiler Pressure Vessel and Pressure Piping Code, and who are in possession of a proper certificate of qualification for each procedure to be performed. Each weld is to be identified with the welder's identification symbol, and welds are not to be concealed until they have been inspected and approved. Electrodes are to be in accordance with CSA W48 Series, Electrodes, and requirements of CAN/CSA W117.2, Safety in Welding, Cutting and Allied Processes are to be followed.

.6 Unless otherwise specified, make flanged joints with Garlock 5500 or equivalent gasket materials to suit the application, and bolts and nuts. Bolts are not to be longer than length necessary to screw nut up flush to the end of bolt. Bolts used for flanged connections in piping with a working pressure of 690 kPa (100 psi) and greater are to be ASTM A-193 Grade B-7, with heavy hexagon nuts to ASTM A-194 CL-2H. Provide suitable washers between each bolt head and flange and between each nut and flange.

.7 A random check of bolted flanged connections will be made to verify flanged connections are properly mated with no shear force acting on bolts. Supply labour to disconnect and reconnect selected flanged joints. If improperly mated joints are found, remove and reinstall affected piping so flanges mate properly. If improperly mated joints are found, additional joints will be checked, and you will be responsible for the repair of any other improper joints discovered.

.8 Unless otherwise specified make soldered joints in copper piping using flux suitable for and compatible with type of solder being used. Clean the outside of pipe end and inside of fitting, valve, or similar accessory prior to soldering.

.9 Joints in medical gas system piping are to be silver brazed in accordance with requirements of CAN/CSA Z7396.1.

.10 Install mechanical joint fittings and couplings in accordance with manufacturer's instructions.

.11 Grooves are to be rolled. Make arrangements with coupling and fitting manufacturer for shop and/or site instructions and demonstrations as required, and adhere to manufacturer's instructions with respect to pipe grooving, support, type of gasket required, anchoring and guiding the grooved piping system.

.12 If pressure crimped couplings and fittings are used, ensure gaskets are fully compatible with piping fluid, and valves and piping accessories are suitable. Use only fitting manufacturer supplied crimping equipment. Comply with manufacturer's latest published specification, instructions, and recommendations with respect to pipe, coupling, and fitting preparation and installation, and support, anchoring and guiding of the piping system.

.13 Solvent weld PVC piping in 2 parts, primer stage and cementing stage, in accordance with manufacturer's recommendations, ASTM D2855, and CSA requirements.

.14 Install PVC piping with gasketed joints in accordance with manufacturer's current published specifications, instructions and recommendations, and CSA requirements.

3.3 DUCT OPENINGS

.1 Duct openings, air inlet and outlet openings, fire damper and similar openings will be provided in new poured concrete work, masonry, drywall and other building surfaces by trade responsible for particular construction in which opening is required.

.2 Size openings for fire dampers to suit damper arrangement with folding blade out of air stream.

.3 For duct openings except where fire dampers are required, pack and seal space between duct or duct insulation and duct opening as specified above for pipe openings in non-fire rated construction.

3.4 SLEEVE AND FORMED OPENING LOCATION DRAWINGS

.1 Prepare and submit for review, drawings indicating size and location of required sleeves, recesses and formed openings in poured or precast concrete work.

.2 Such drawings are to be completely and accurately dimensioned and relate sleeve, recesses, and formed openings to suitable grid lines and elevation datum, and are to take into account structural items such as grade beams, column caps, and column drop slabs.

.3 Begin to prepare such drawings immediately upon notification of acceptance of bid and award of Contract.

3.5 INSTALLATION OF PIPE ESCUTCHEON PLATES

.1 Provide escutcheon plates suitably secured over exposed piping passing through finished building surfaces. A finished building surface is any surface with a factory finish or that receives a site applied finish.

.2 Install plates so they are tight against building surface concerned, completely covering pipe sleeves and/or openings, except where waterproof sleeves extend above floors, in which case fit plate tightly around sleeve.

3.6 SUPPLY OF ACCESS DOORS

.1 Supply access doors to give access to mechanical work which may need maintenance or repair but which is concealed in inaccessible construction, except as otherwise specified herein or on drawings.

.2 Before commencing installation of mechanical work, coordinate with other trades and prepare on a set of reflected ceiling plans and wall elevations, complete layouts of access doors. Submit these layouts for Consultant's review and show exact sizes and locations of such access doors. Locate and arrange mechanical work to suit.

.3 Access doors will be installed by trade responsible for particular type of construction in which doors are required. Supply access doors to trade installing same at proper time.

.4 Wherever possible, access doors to be of a standard size for each application. Confirm exact dimensions and minimum size restrictions with the Consultant prior to ordering.

.5 Group piping and ductwork to ensure minimum number of access doors is required.

.6 Coordinate with Electrical Contractor and General Trades Contractor to ensure access doors on project are provided by a single manufacturer, installed as part of work of General Trades Contractor and work involving both mechanical and electrical services should, where possible, be accessible from common access door. Coordinate work to ensure common location access doors are not supplied by both Mechanical Divisions and Electrical Divisions.

.7 Identify access doors supplied for concealed medical gas system shut-off valves or equipment with a permanent label in accordance with requirements of CAN/CSA Z7396.1.

3.7 INSTALLATION OF VALVES

.1 Generally, valve locations are indicated or specified on drawings or specified in Sections of the Specification where valves are specified, however, regardless of locations shown or specified, following requirements apply:

.1 provide shut-off valves to isolate systems, at base of vertical risers, in branch take-offs at mains and risers on floors, to isolate equipment, to permit work phasing as required, and wherever else required for proper system operation and maintenance;

.2 install shut-off valves with handles upright or horizontal, not inverted, and located for easy access;

.3 unless otherwise specified, provide a check valve in discharge piping of each pump;

.4 valve sizes are to be same as connecting pipe size;

.5 valves are to be permanently identified with size, manufacturer's name, valve model or figure number and pressure rating, and wherever possible, valves are to be product of same manufacturer;

.6 for valves in insulated piping, design of valve stem, handle and operating mechanism is to be such that insulation does not have to be cut or altered in any manner to permit valve operation.

3.8 FINISH PAINTING OF MECHANICAL WORK

.1 Touch-up paint damaged factory applied finishes on mechanical work products.

3.9 PIPE LEAKAGE TESTING

.1 Before piping has been insulated or concealed, and before equipment, fixtures and fittings have been connected, test piping for leakage.

.2 Tests are to be witnessed by the Consultant and/or Owner's representative, and, where required, representatives of governing authorities. Give ample notice of tests in writing and verify attendance. Have completed test report sheets dated and signed by those present to confirm proper test results.

.3 When circumstances prevent scheduled tests from taking place, give immediate and adequate notice of cancellation to all who were scheduled to attend.

.4 Gravity Drainage and Vent Piping

.1 Test piping in accordance with local governing building code.

.2 After fixtures and fittings are set and pipes are connected to building drain or drains, turn on water into pipe, fixtures, fittings and traps in order to detect any imperfect material or workmanship. Perform a smoke test if required by local governing authorities.

.5 Pumped Drainage Piping

.1 Test piping with cold water at a pressure of 1-½ times normal working pressure and maintain pressure for a minimum of 2 hours.

.6 Domestic Water Piping

.1 Test piping with cold water at a pressure of 1-½ times normal working pressure and maintain pressure for a minimum of 2 hours.

.7 Sprinkler System Piping

.1 Test system piping in accordance with requirements of NFPA No. 13, "Installation of Sprinkler Systems", and in accordance with any additional requirements of governing authorities.

.8 Standpipe System Piping

.1 Test system piping in accordance with requirements of NFPA No. 14, "Standpipe and Hose Systems", and in accordance with any additional requirements of governing authorities.

.9 CO2 Fire Extinguishing System Piping

.1 Test system piping in accordance with requirements of NFPA No. 12, "Standard on Carbon Dioxide Extinguishing Systems", and in accordance with any additional requirements of governing authorities.

.10 Heat Transfer (HVAC) System Piping

.1 Test piping with cold water at a pressure of 1035 kPa (150 psi) for a minimum of 2 hours.

.11 Steam and Condensate Piping

.1 Test piping with cold water for a minimum of 2 hours at following pressures:

.1 0 kPa to 105 kPa (0 psi to 15 psi) low pressure piping – 690 kPa (100 psi);

.2 110 kPa to 690 kPa (16 psi to 100 psi) medium pressure piping – 1035 kPa (150 psi);

.3 greater than 690 kPa (100 psi) high pressure piping – 1380 kPa (200 psi).

.12 Compressed Air Piping

.1 Test piping with dry compressed air or nitrogen at 690 kPa (100 psi) for a minimum of 2 hours.

.2 Test piping joints with a water-soap solution while piping is under pressure to detect leaks.

.13 Refrigerant Piping

.1 Test refrigerant piping for leakage and dehydrate in accordance with requirements of Chapter 18 of ASHRAE Handbook - Fundamentals.

.14 Control Air Piping and Tubing

.1 Test control air piping and tubing with dry compressed air or nitrogen before concealing and again before connection of instruments.

.2 Rough-in test pressure is to be 345 kPa (50 psi) maintained over 24 hours with a pressure drop not to exceed 35 kPa (5 psi).

.3 Test joints for leaks with a soap solution.

.4 Finish test is to be 205 kPa (30 psi) with a permissible loss of 7 kPa (1 psi) over a 4 hour period. Prior to connecting instruments, blow systems clean and dry, and test component connections for leaks with a water/soap solution.

.5 Medical Gas System Piping

.1 Perform leakage and flow tests for piping using oil-free compressed air or oil-free dry nitrogen in accordance with requirements of CAN/CSA Z7396.1.

.15 Pure Water Piping

.1 When piping has been properly flushed and cleaned, test at 690 kPa (100 psi) for 2 hours with only distilled water or filtered dry compressed air. If distilled water is used, drain system when testing is complete.

.16 Following requirements apply to all testing:

.1 ensure piping has been properly flushed, cleaned and is clear of foreign matter prior to pressure testing;

.2 temporarily remove or valve off piping system specialties or equipment which may be damaged by test pressures prior to pressure testing systems, and flush piping to remove foreign matter;

.3 when testing is carried out below highest level of the particular system, increase test pressure by the hydrostatic head of 7 kPa (1 psi) for every 600 mm (24") below the high point;

.4 include for temporary piping connections required to properly complete tests;

.5 piping under test pressure is to have zero pressure drop for length of test period;

.6 tighten leaks found during tests while piping is under pressure. If this is impossible, remove and refit piping and reapply test until satisfactory results are obtained;

.7 where leaks occur in threaded joints in steel piping, no caulking of these joints will be allowed under any conditions;

.8 tests are to be done in reasonably sized sections so as to minimize number of tests required;

.9 in addition to leakage tests specified above, demonstrate proper flow throughout systems including mains, connections and equipment, as well as proper venting and drainage, and include for any necessary system adjustments to achieve proper conditions.

3.10 INTERRUPTION TO AND SHUT-DOWN OF MECHANICAL SERVICES AND SYSTEMS

.1 Coordinate shut-down and interruption to existing mechanical systems with Owner. Generally, shut-downs may be performed only between the hours of 12:00 midnight Friday until 6:00 a.m. Monday morning, unless otherwise specified in Division 01. Include for costs of premium time to perform work during nights, weekends or other times outside of normal working hours, which may be necessary to comply with stipulations specified herein this Article. Services for operation of existing non-renovated areas of building are to be maintained.

.2 Upon award of a Contract, submit a list of anticipated shut-down times and their maximum duration.

.3 Prior to each shut-down or interruption, inform Owner and the Consultant in writing 5 working days in advance of proposed shut-down or interruption and obtain written consent to proceed. Do not shut-down or interrupt any system or service without such written consent. Shutdowns of some essential services may require additional advance notification time.

.4 Perform work associated with shut-downs and interruptions as continuous operations to minimize shut-down time and to reinstate systems as soon as possible, and, prior to any shut-down, ensure materials and labour required to complete the work for which shut-down is required are available at site.

.5 Pipe freezing shall be used to connect new piping to existing piping. Alternative methods may be proposed, if site conditions are evaluated and permit, and are approved by the Consultant.

.6 Where existing isolation valves do not hold, pipe freezing shall be used to connect new piping to existing piping.

3.11 CUTTING, PATCHING AND CORE DRILLING

.1 Unless otherwise provided by General Trades, perform cutting, patching, and core drilling of existing building required for installation of mechanical work. Perform cutting in a neat and true fashion, with proper tools and equipment to Consultant’s approval. Patching is to exactly match existing finishes and be performed by tradesmen skilled in particular trade or application. Work is subject to review and acceptance by the Consultant.

.2 Criteria for cutting holes for additional services:

.1 cut holes through slabs only; no holes to be cut through beams;

.2 cut holes 150 mm (6") diameter or smaller only; obtain approval from Structural Consultant for larger holes;

.3 keep at least 100 mm (4") clear from beam faces;

.4 space at least 3 hole diameters on centre;

.5 for holes that are required closer than 25% of slab span from supporting beam face, use cover meter above slab to clear slab top bars;

.6 for holes that are required within 50% of slab span, use cover meter underside of slab to clear slab bottom bars;

.7 submit sleeving drawings indicating holes and their locations for Structural Consultant's review.

.3 Do not cut or drill any existing work without approval from Owner and Consultant. Be responsible for damage done to building and services caused by cutting or drilling.

.4 Where pipes pass through existing construction, core drill an opening. Size openings to leave 12 mm (½") clearance around pipes or pipe insulation.

.5 Prior to drilling or cutting an opening, determine, in consultation with Consultant and Owner, and by use of non-destructive radar scan (magnetic scan) of slab or wall, presence of any existing services and reinforcement bars concealed behind building surface to be cut and locate openings to suit. Coring is not permitted through concrete beams or girders.

.6 Where drilling is required in waterproof slabs, size opening to permit snug and tight installation of a pipe sleeve sized to leave 12 mm (½") clearance around pipe or pipe insulation. Provide a pipe sleeve, constructed of Schedule 40 galvanized steel pipe with a flange at one end and of a length to extend 100 mm (4") above slab, in opening. Secure flange to the underside of slab and caulk void between sleeve and slab opening with proper non-hardening silicone base caulking compound to produce a water-tight installation.

.7 Firestop and seal openings in fire rated construction. Do not leave openings open overnight unless approved by Owner and Consultant.

3.12 PACKING AND SEALING CORE DRILLED PIPE OPENINGS

.1 Pack and seal void between pipe opening and pipe or pipe insulation for length of opening as follows:

.1 non-fire rated interior construction – pack with mineral wool and seal both ends of opening with non-hardening silicone base caulking compound to produce a water-tight seal;

.2 exterior walls above grade – pack with mineral wool and seal both ends of sleeves water-tight with non-hardening silicone base caulking compound unless mechanical type seals have been specified;

.3 exterior walls below grade (and any other wall where water leakage may be a problem) – seal with link type mechanical seals as specified.

3.13 CLEANING MECHANICAL WORK

.1 Refer to cleaning requirements specified in Division 01.

.2 Clean mechanical work prior to application for Substantial Performance of the Work.

.3 Include for vacuum cleaning interior of air handling units and ductwork systems.

3.14 CONNECTIONS TO OTHER EQUIPMENT

.1 Carefully examine Contract Documents during bidding period and include for mechanical work piping and/or ductwork connections to equipment requiring such connections.

3.15 SEISMIC RESTRAINT ANCHOR POINTS FOR EQUIPMENT

.1 Where mechanical equipment requires seismic restraint, it is to be complete with manufacturer designed and rated seismic restraint anchor points and attachments, certified by equipment manufacturers, so equipment may be bolted down or restrained in the field.

.2 Equipment to be restrained must be designed such that the strength and anchorage of its internal components exceed force level; used to restrain and anchor the equipment to the supporting structure.

3.16 INSTALLATION OF FLEXIBLE CONNECTORS

.1 Provide flexible connectors in piping connections to seismically restrained equipment, where applicable, and wherever else shown.

.2 Provide flexible connectors in piping connections to vibration isolated equipment.

3.17 FAN NOISE LEVELS

.1 Submit sound power levels with fan shop drawings/product data, with levels measured to AMCA 300 and calculated to AMCA 301.

3.18 EQUIPMENT AND SYSTEM MANUFACTURER'S CERTIFICATION

.1 When equipment/system installation is complete, but prior to start-up procedures, arrange and pay for equipment/system manufacturer's authorized representative to visit site to examine installation, and after any required corrective measures have been made, to certify in writing to the Consultant that equipment/system installation is complete and in accordance with equipment/system manufacturer's instructions.

3.19 SYSTEM STARTUP

.1 When installation of equipment/systems is complete but prior to commissioning, perform start-up for equipment/systems as specified in mechanical work Sections in accordance with following requirements:

.1 Submit a copy of each equipment/system manufacturer's start-up report sheet to the Consultant for review, and incorporate any comments made by the Consultant.

.2 Under direct on-site supervision and involvement of equipment/system manufacturer's representative, start-up equipment/systems, make any required adjustments, document procedures, leave equipment/systems in proper operating condition, and submit to the Consultant complete set of start-up documentation sheets signed by manufacturer/supplier and Contractor.

.3 Commission interconnected life safety systems in accordance with CAN/ULC-S1001-11 and provide written report for Consultant's review.

END OF SECTION

PART 1 - GENERAL

1.1 SECTION INCLUDES

.1 This Section specifies requirements, criteria, methods, and execution for mechanical demolition work that are common to one or more mechanical work Sections, and it is intended as a supplement to each Section and is to be read accordingly.

PART 2 - PRODUCTS – NOT USED

PART 3 - EXECUTION

3.1 DISCONNECTION AND REMOVAL OF EXISTING MECHANICAL WORK

.1 Where indicated on drawings, disconnect, and remove existing mechanical work, including hangers, supports, insulation, etc. Disconnect at point of supply, remove obsolete connecting services and make system safe. Cut back obsolete piping behind finishes and cap water-tight unless otherwise specified.

.2 Scope and extent of demolition or revision work is only generally indicated on drawings. Estimate scope, extent and cost of work at site during bidding period site visit(s). Claims for extra costs for demolition work not shown or specified but clearly visible or ascertainable at site during bidding period site visits will not be allowed.

.3 If any re-design is required due to discrepancies between mechanical drawings and site conditions, notify the Consultant who will issue a Site Instruction. If, in the opinion of the Consultant, discrepancies between mechanical drawings and actual site conditions are of a minor nature, required modifications are to be done at no additional cost.

.4 Where existing mechanical services extend through, or are in an area to serve items which are to remain, maintain services in operation. Include for rerouting existing services concealed behind existing finishes and which become exposed during renovation work, so as to be concealed behind new or existing finishes.

.5 Unless otherwise specified, remove from site and dispose of existing materials which have been removed and are not to be relocated or reused.

.6 Unless otherwise specified, remove from site and dispose of temporary mechanical services and equipment which are not to be reused and/or retained.

.7

END OF SECTION

PART 1 - GENERAL

1.1 SECTION INCLUDES

.1 This Section specifies requirements that are common to Mechanical Divisions work Sections and it is a supplement to each Section and is to be read accordingly. Where requirements of this Section contradict requirements of Division 00 or Division 01, conditions of Division 00 or Division 01 to take precedence.

.2 Be responsible for advising product vendors of requirements of this Section.

1.2 RELATED REQUIREMENTS

.1 Division 00 and Division 01 apply to and are a part of this Section.

1.3 DEFINITIONS

.1 "concealed" – means hidden from normal sight in furred spaces, shafts, ceiling spaces, walls and partitions.

.2 "exposed" – means work normally visible, including work in equipment rooms, service tunnels, and similar spaces.

.3 "finished" - means when in description of any area or part of an area or a product which receives a finish such as paint, or in case of a product may be factory finished.

.4 “provision” or "provide" (and tenses of "provide") – means supply and install complete.

.5 "install" (and tenses of "install") – means secure in position, connect complete, test, adjust, verify, and certify.

.6 "supply" – means to procure, arrange for delivery to site, inspect, accept delivery, and administer supply of products; distribute to areas; and include manufacturer’s supply of any special materials, standard on site testing, initial start-up, programming, basic commissioning, warranties, and manufacturers’ assistance to Contractor.

.7 "delete" or "remove" (and tenses of "delete" or “remove”) – means to disconnect, make safe, and remove obsolete materials; patch and repair/finish surfaces to match adjoining similar construction; include for associated re-programming of systems and/or change of documentation identifications to suit deletions, and properly dispose of deleted products off site unless otherwise instructed by Owner and reviewed with the Consultant.

.8 "BAS" – means building automation system; "BMS" – means building management system; "FMS" – means facility management system; and “DDC” means direct digital controls; references to "BAS", "BMS", "FMS" and “DDC” generally mean same.

.9 "governing authority" and/or "authority having jurisdiction" and/or "regulatory authority" and/or "Municipal authority" – means government departments, agencies, standards, rules and regulations that apply to and govern work and to which work must adhere.

.10 "OSHA" and "OHSA" – stands for Occupational Safety and Health Administration and Occupational Health and Safety Act, and wherever either one is used, they are to be read to mean local governing occupational health and safety regulations that apply to and govern work and to which work must adhere, regardless if Project falls within either authority's jurisdiction.

.11 "Mechanical Divisions" – refers to Division 20, Division 21, Division 22, Division 23, Division 25, and other Divisions as specifically noted, and which work as defined in Specifications and/or on drawings is responsibility of Mechanical Contractor, unless otherwise noted.

.12 "Electrical Divisions" – refers to Division 26, Division 27, Division 28, and other Divisions as specifically noted, and which work as defined in Specifications and/or on drawings is responsibility of Electrical Contractor, unless otherwise noted.

.13 "Consultant" – means person, firm or corporation identified as such in Agreement or Documents, and is licensed to practice in Place of the Work, and has been appointed by Owner to act for Owner in a professional capacity in relation to the Work.

.14 Wherever words "indicated", "shown", "noted", "listed", or similar words or phrases are used in Contract Documents they are understood, unless otherwise defined, to mean product referred to is "indicated", "shown", "listed", or "noted" on Contract Documents.

.15 Wherever words "reviewed", "satisfactory", "as directed", "submit", or similar words or phrases are used in Contract Documents they are understood, unless otherwise defined, to mean that work or product referred to is "reviewed by", "to the satisfaction of", "submitted to", etc., Consultant.

1.4 DOCUMENTS

.1 Documents for bidding include but are not limited to issued Drawings, Specifications and Addenda.

.2 Specification is arranged in accordance with CSI/CSC 49 Divisions of MasterFormat.

.3 Drawings and Specifications are portions of Contract Documents and identify labour, products and services necessary for performance of work and form a basis for determining pricing. They are intended to be cooperative. Perform work that is shown, specified, or reasonably implied on the drawings but not mentioned in Specification, or vice-versa, as though fully covered by both.

.4 Review Drawings and Specifications in conjunction with documents of other Divisions and, where applicable, Code Consultant’s report.

.5 Unless otherwise specifically noted in Specifications and/or on Drawings, Sections of Mechanical Divisions are not intended to delegate functions nor to delegate work and supply of materials to any specific trade, but rather to generally designate a basic unit of work, and Sections are to be read as a whole.

.6 Drawings are performance drawings, diagrammatic, and show approximate locations of equipment and connecting services. Any information regarding accurate measurement of building is to be taken on site. Do not scale Drawings, and do not use Drawings for prefabrication work.

.7 Drawings are intended to convey the scope of work and do not show architectural and structural details. Provide, at your cost, offsets, fittings, transformations and similar products required as a result of obstructions and other architectural and/or structural details but not shown on Drawings.

.8 Locations of equipment and materials shown may be altered, when reviewed by the Consultant, to meet requirements of equipment and/or materials, other equipment or systems being installed, and of building, all at no additional cost to Contract.

.9 Specification does not generally indicate specific number of items or amounts of material required. Specification is intended to provide product data and installation requirements. Refer to schedules, Drawings (layouts, riser diagrams, schematics, details) and Specification to provide correct quantities. Singular may be read as plural and vice versa.

.10 Starter/motor control centre (MCC)/variable frequency drive (VFD) schedule drawings are both mechanical and electrical, and apply to work of Mechanical Divisions and Electrical Divisions. Be responsible for reviewing starter, MCC, VFD, and motor specification requirements prior to Bid submission. Confirm and coordinate exact scope of work and responsibility of work between Mechanical Divisions and Electrical Divisions.

.11 Drawings and Specifications have been prepared solely for use by party with whom Consultant has entered into a contract and there are no representations of any kind made by the Consultant to any other party.

.12 In the case of discrepancies between the drawings and specifications, documents will govern in order specified in “General Conditions”, however, when scale and date of drawings are same, or where discrepancy exists within specification, most costly arrangement will take precedence.

1.5 METRIC AND IMPERIAL MEASUREMENTS

.1 Generally, both metric and imperial units of measurement are given in Sections of Specification governed by this section. Measurement conversions may be generally "soft" and rounded off. Confirm exact measurements based on application. Where measurements are related to installation and onsite applications, confirm issued document measurements with applicable local code requirements, and/or as applicable, make accurate measurements onsite. Where significant discrepancies are found, immediately notify Consultant for direction.

1.6 EXAMINATION OF DOCUMENTS AND SITE

.1 Carefully examine Documents and visit site to determine and review existing site conditions that will or may affect work, and include for such conditions in Bid Price.

.2 Report to Consultant, prior to Bid Submittal, any existing site condition that will or may affect performance of work as per Documents. Failure to do so will not be grounds for additional costs.

.3 Upon finding discrepancies in, or omissions from Documents, or having doubt as to their meaning or intent, immediately notify Consultant, in writing.

1.7 WORK STANDARDS

.1 Where any code, regulation, bylaw, standard, contract form, manual, printed instruction, and installation and application instruction is quoted it means, unless otherwise specifically noted, latest published edition at time of submission of Bids adopted by and enforced by local governing authorities having jurisdiction. Include for compliance with revisions, bulletins, supplementary standards or amendments issued by local governing authorities.

.2 Where regulatory codes, standards and regulations are at variance with Drawings and Specification, more stringent requirement will apply unless otherwise directed by Owner and reviewed with the Consultant.

.3 Supplementary mandatory specification and requirements to be used in conjunction with project include but are not limited to following:

.1 Air-Conditioning, Heating and Refrigeration Institute (AHRI);

.2 Air Movement and Control Association (AMCA);

.3 American Iron and Steel Institute (AISI);

.4 American National Standards Institute (ANSI);

.5 American Society of Heating, Refrigerating and Air Conditioning Engineers, Inc., (ASHRAE);

.6 American Society of Mechanical Engineers (ASME);

.7 American Society of Testing and Materials (ASTM);

.8 American Water Works Association (AWWA);

.9 Associated Air Balance Council (AABC);

.10 Building Industry Consulting Services, International (BICSI);

.11 Canadian Gas Association (CGA);

.12 Canadian General Standards Board (CGSB);

.13 Canadian Standards Association (CSA);

.14 Electrical and Electronic Manufacturers Association of Canada (EEMAC);

.15 Electrical Safety Authority (ESA);

.16 Electronic Industries Association (EIA);

.17 Factory Mutual Systems (FM);

.18 Illuminating Engineering Society (IES);

.19 Institute of Electrical and Electronic Engineers (IEEE);

.20 International Standards Organization (ISO);

.21 Manufacturers Standardization Society of the Valve and Fittings Industry, Inc. (MSS);

.22 National Building Code of Canada (NBC);

.23 National Electrical Manufacturers Association (NEMA);

.24 National Environmental Balancing Bureau (NEBB);

.25 National Fire Protection Association (NFPA);

.26 National Standards of Canada;

.27 NSF International;

.28 Occupational Health and Safety Act (OHSA);

.29 Ontario Building Code (OBC);

.30 Ontario Electrical Safety Code (OESC);

.31 Sheet Metal and Air Conditioning Contractors' National Association (SMACNA);

.32 Technical Standards and Safety Authority (TSSA);

.33 Thermal Insulation Association of Canada (TIAC);

.34 Underwriters' Laboratories of Canada (ULC);

.35 Workplace Hazardous Materials Information System (WHMIS);

.36 Material Safety Data Sheets by product manufacturers;

.37 Local utility inspection permits;

.38 Codes, standards, and regulations of local governing authorities having jurisdiction;

.39 Additional codes and standards listed in Trade Sections;

.40 Owner's standards.

.4 Provide applicable requirements for barrier free access in accordance with latest edition of local governing building code.

.5 Where any governing Code, Regulation, or Standard requires preparation and submission of special details or drawings for review they are to be prepared and submitted to appropriate authorities. Be responsible for costs associated with these submittals.

.6 Unless otherwise specified, install equipment in accordance with equipment manufacturer's recommendations and instructions, and requirements of governing Codes, Standards, and Regulations. Governing Codes, Standards, and Regulations take precedence over manufacturer's instructions.

.7 Work is to be performed by journeyperson tradesmen who perform only work that their certificates permit, or by apprentice tradesmen under direct on site supervision of experienced journeyperson tradesman. Journeyperson to apprentice ratio is not to exceed ratio determined by the Board as stated in Ontario College of Trades and Apprenticeship Act or local equivalent governing body in Place of the Work.

.8 Journeyperson tradesmen are to have a copy of valid trade certificates available at site for review with the Consultant at any time.

.9 Experienced and qualified superintendent is to be on-site at times when work is being performed.

.10 Coordinate work inspection reviews and approvals with governing inspection department to ensure that construction schedule is not delayed. Be responsible for prompt notification of deficiencies to the Consultant and submission of reports and certificates to the Consultant.

.11 Properly protect equipment and materials on site from damage due to elements and work of trades, to satisfaction of Owner and reviewed with the Consultant. Equipment and materials are to be in new condition upon Substantial Performance of the Work.

.12 Mechanical piping system work, including equipment, must comply in all respects with requirements of local technical standards authorities and CSA B51, Boiler, Pressure Vessels and Pressure Piping Code. Where required, mechanical work products must bear a CRN number.

.13 Electrical items associated with mechanical equipment are to be certified and bear stamp or seal of a recognized testing agency such as CSA, UL, ULC, ETL, etc., or bear a stamp to indicate special electrical utility approval.

.14 Healthcare Facility Standards

.1 Comply with following CAN/CSA Standards:

.1 CAN/CSA Z317.13, Infection Control During Construction, Renovation, and Maintenance of Health Care Facilities: Prepare a list of areas of the work where infection control procedures are to be in force and review list and procedures with healthcare facility's Infection Control Officer or a designated healthcare facility representative prior to commencing work in aforementioned areas. As work proceeds, ensure infection control procedures are being maintained.

.2 CAN/CSA Z317.1, Special Requirements for Plumbing Installations in Health Care Facilities.

.3 CAN/CSA Z317.2, Special Requirements for Heating, Ventilation, and Air-Conditioning (HVAC) Systems in Health Care Facilities.

.4 CAN/CSA Z317.10, Handling of Health Care Waste Materials.

.5 CAN/CSA Z8000, Canadian Health Care Facilities.

.6 CAN/CSA Z8001, Commissioning of Health Care Facilities.

.7 CAN/CSA Z7396.1 Medical Gas Pipeline Systems - Part 1 Pipelines for Medical Gases, Medical Vacuum, Medical Support Gases, and Anaesthetic Gas Scavenging Systems.

.2 Prepare a separate set of "as-built" white prints on a day-to-day basis for medical gas piping system work.

.3 Comply with healthcare facility's latest policies and procedures regarding infection prevention and decontamination measures during work of project. Refer to additional requirements of Division 01.

1.8 PERMITS, CERTIFICATES, APPROVALS, AND FEES

.1 Contact and confirm with local authorities having jurisdiction including utility providers, requirements for approvals from such authorities. Obtain and pay for permits, certificates, and approvals required to complete Work.

.2 Be responsible for ensuring that authorities having jurisdiction which require on-site inspection of work, have ample notification to perform inspection, with sufficient lead time to correct deficiencies in a manner that will not impede schedule of completion of Work. If any defect, deficiency or non-compliant is found in work by inspection, be responsible for costs of such inspection, including any related expenses, making good and return to site, until work is passed by governing authorities.

.3 Obtain and submit to Consultant, approval/inspection certificates issued by governing authorities to confirm that Work as installed is in accordance with rules and regulations of local governing authorities and are acceptable.

.4 Include in each copy of operating and maintenance instruction manuals, copies of approvals and inspection certificates issued by regulatory authorities.

1.9 REQUIREMENTS FOR CONTRACTOR RETAINED ENGINEERS

.1 Professional engineers retained to perform consulting services with regard to Project work, i.e. seismic engineer, fire protection engineer or structural engineer, are to be members in good standing with local Association of Professional Engineers, and are to carry and pay for errors and omissions professional liability insurance in compliance with requirements of governing authorities in Place of the Work.

.2 Retained engineer’s professional liability insurance is to protect Contractor's consultants and their respective servants, agents, and employees against any loss or damage resulting from professional services rendered by aforementioned consultants and their respective servants, agents, and employees in regards to the Work of this Contract.

.3 Unless otherwise specified in Division 00 or Division 01, liability insurance requirements are as follows:

.1 coverage is to be a minimum of $1,000,000.00 CDN inclusive of any one occurrence;

.2 insurance policy is not to be cancelled or changed in any way without insurer giving Owner minimum thirty days written notice;

.3 liability insurance is to be obtained from an insurer registered and licensed to underwrite such insurance in the Place of the Work;

.4 retained consultants are to ascertain that sub-consultants employed by them carry insurance in the form and limits specified above;

.5 evidence of the required liability insurance in such form as may be required is to be issued to Owner, Owner’s Consultant, and Municipal Authorities as required prior to commencement of aforementioned consultant’s services.

1.10 WORKPLACE SAFETY

.1 Comply with requirements of Workplace Hazardous Materials Information System (WHMIS) regarding use, handling, storage, and disposal of hazardous materials. Submit WHMIS MSDS (Material Safety Data Sheets) for products where required, and maintain one copy at site in a visible and accessible location available to personnel.

.2 Comply with requirements of Occupational Health and Safety Act and other regulations pertaining to health and safety, including worker’s compensation/insurance board and fall protection regulations. When working in confined spaces, comply with requirements of Occupational Health and Safety Act - Ontario Regulation 632, "Confined Spaces" and any other applicable Ministry of Labour requirements.

.3 If at any time during course of work, hazardous materials other than those identified in Documents and pertaining to Project Scope of Work, are encountered, or suspected that were not identified as being present and which specific instructions in handling of such materials were not given, cease work in area in question and immediately notify Consultant. Comply with local governing regulations with regards to working in areas suspected of containing hazardous materials. Do not resume work in affected area without approval from Owner and reviewed with the Consultant.

1.11 PLANNING AND LAYOUT OF WORK

.1 Base installation layout, design, terminations, and supply of accessories, on Contract Documents with specific coordination with reviewed shop drawings.

.2 Plan, coordinate, and establish exact locations and routing of services with affected trades prior to installation such that services clear each other as well as other obstructions. Generally, order of right of way for services to be as follows:

.1 piping requiring uniform pitch;

.2 piping 100 mm (4") dia. and larger;

.3 large ducts (main runs);

.4 cable tray and bus duct;

.5 conduit 100 mm (4") dia. and larger;

.6 piping less than 100 mm (4") dia.;

.7 smaller branch ductwork;

.8 conduit less than 100 mm (4") dia.

.3 Unless otherwise shown or specified, conceal work in finished areas, and conceal work in partially finished and/or unfinished areas to extent made possible by the area construction. Install services as high as possible to conserve headroom and/or ceiling space. Notify Consultant where headroom or ceiling space appears to be inadequate prior to installation of work.

.4 Do not use Contract Drawing measurements for prefabrication and layout of piping, sheet metal work and such other work. Locations and routing are to generally be in accordance with Contract Drawings, however, prepare layout drawings for such work. Use established bench marks for both horizontal and vertical measurements. Confirm inverts, coordinate with and make allowances for work of other trades. Accurately layout work, and be entirely responsible for work installed in accordance with layout drawings. Where any invert, grade, or size is at variance with Contract Drawings, notify Consultant prior to proceeding with work.

.5 Prepare plan and interference drawings (at a minimum drawing scale of 1:50 or ¼"=1' 0") of work for coordination with each trade Contractor. Arrange for preparation of detailed section drawings of ceiling spaces of corridors and any other congested areas. Sections are to be cross referenced with plan drawings so that trades may make use of section drawings. Section drawings to indicate lateral and elevation dimensions of major services within ceiling space. Lateral dimensions are to be from grid lines and elevations from top of floor slab. Obtain from Consultant, engineering drawings for this use. Contractors' interference drawings are to be distributed among other Trade Contractors. Submit drawings to the Consultant for review. Failure of General Contractor to prepare and coordinate overall interface drawings of trades does not relieve respective Division Contractor of responsibility to ensure that work is properly planned and coordinated.

.6 Carry out alterations in arrangement of work that has been installed without proper coordination, study, and review, even if in accordance with Contract Documents, in order to conceal work behind finishes, or to allow installation of other work, without additional cost. In addition, make necessary alterations in other work required by such alterations, without additional cost.

.7 Shut-off valves, balancing devices, air vents, equipment, and similar products, particularly such products located above suspended ceilings must be located for easy access for servicing and/or removal. Products which do not meet this location requirement are to be relocated to an accessible location at no additional cost.

.8 Be responsible for making necessary changes, at no additional cost, to accommodate structural and building conditions that were missed due to lack of coordination.

1.12 SCHEDULING

.1 Include for any and all scheduling, coordination, and construction phasing to suit project, specified in Division 01 and/or as indicated on the drawings. Review exact phasing requirements with Consultant and Owner prior to start of Work. Facility must remain operational at all times.

.2 Phasing and scheduling of Work is required in order to maintain existing building operations. Include costs (including costs for "off hours" work) for scheduling, co-ordination, and construction phasing to suit this project as specified in Division 01 and on drawings. Review phasing requirements with the Consultant prior to start of Work.

.3 Protect existing areas above, below, and adjacent areas of Work from any debris, noise, or interruptions to existing services to satisfaction of Owner and reviewed with the Consultant. Maintain in operation existing services to these areas to allow Owner to continue use of these

areas. If services that are required to be maintained run through areas of renovations, provide necessary protection to services or reroute, in coordination with Owner and Consultant. Include for required premium time work to meet these requirements.

.4 Work being performed within occupied spaces and work affecting surfaces adjacent to occupied spaces may need to be performed after regular business hours. For areas where spaces are used by Owner on a 24 hours basis or over various hours, coordinate hours of work with Owner on a regular basis to suit Owner's schedule. Execute work at times confirmed with and agreed to by Owner and reviewed with the Consultant, so as not to inconvenience Owner's occupation or in any way hinder Owner's use of building. Include for required premium timework to meet these requirements.

.5 Project partial occupancy permits may be required throughout project. Provide for each partial permit, required local governing authority certificate and any other testing/verification certificates for systems.

1.13 COORDINATION

.1 Review Contract Documents and coordinate work with work of each trade. Coordination requirements are to include but not be limited to following:

.1 requirements for openings, sleeves, inserts and other hardware necessary for installation of work;

.2 concrete work such as housekeeping pads, sumps, bases, etc., required for work, and including required dimensions, operating weight of equipment, location, etc.;

.3 depth and routing of excavation required for work, and requirements for bedding and backfill;

.4 wiring work required for equipment and systems but not specified to be done as part of mechanical work, including termination points, wiring type and size, and any other requirements.

.2 Ensure materials and equipment are delivered to site at proper time and in such assemblies and sizes so as to enter into building and be moved into spaces where they are to be located without difficulty.

.3 Wherever possible, coordinate equipment deliveries with manufacturers and/or suppliers so equipment is delivered to site when it is required, or so it can be stored within building, subject to available space as confirmed with Owner and reviewed with Owner, and protected from elements.

.4 Ensure proper access and service clearances are maintained around equipment, and, where applicable, access space for future equipment removal or replacement is not impeded. Comply with code requirements with regards to access space provision around equipment. Remove and replace any equipment which does not meet this requirement.

.5 Where work is to be integrated, or is to be installed in close proximity with work of other trades, coordinate work prior to and during installation.

1.14 PRODUCTS

.1 Be responsible for ordering of products (equipment and materials) in a timely manner in order to meet project-scheduling timelines. Failure to order products to allow manufacturers sufficient production/delivery time to meet project-scheduling timelines is an unacceptable reason to request for other suppliers or substitutions.

.2 Provide Canadian manufactured products wherever possible or required and when quality and performance is obtainable at a competitive price. Products are to be supplied from manufacturer's authorized Canadian representative, unless otherwise noted. Unless otherwise specified, products are to be new and are to comply with applicable respective Canadian standards. References to UL listings of products to include requirements that products are to be also Underwriters Laboratories of Canada (ULC) listed for use in Canada. Products are to meet or exceed latest ANSI/ASHRAE/IES

90.1 standards, as applicable. Do not supply any products containing asbestos materials or PCB materials.

.3 Systems and equipment of this Project are to be "State of the Art" and be most recent and up to date series/version of product that is available at time of shop drawing review process. Products that have been stored or "on shelf" for an extended period of time will not be accepted. Software is to be of latest version available and be provided with updates available at time of shop drawing review process. Systems are to be designed such that its software is backwards compatible. Future upgrades are not to require any hardware replacements or additions to utilize latest software.

.4 Products scheduled and/or specified have been selected to establish a performance and quality standard, and, in some instances, a dimensional standard. In most cases, base specified manufacturers are stated for any product specified by manufacturer’s name and model number. Where manufacturers are listed, first name listed is base specified company. Bid Price may be based on products supplied by any of manufacturers’ base specified or named as acceptable for particular product. If manufacturers are not stated for a particular product, base Bid Price on product supplied by base specified manufacturer.

.5 Documents have been prepared based on product available at time of Bidding. If, after award of Contract, and if successful manufacturer can no longer supply a product that meets base specifications, notify Consultant immediately. Be responsible for obtaining other manufacturers product that complies with base specified performance and criteria and meets project timelines. Proposed products are subject to review and consideration by the Consultant and are considered as substitutions subject to a credit to Contract. In addition, if such products require modifications to room spaces, mechanical systems, electrical systems, etc., include required changes. Such changes are to be submitted in detail to the Consultant for review and consideration for acceptance. There will be no increase in Contract Price for revisions. Above conditions supplement and are not to supersede any specification conditions with regards to substitutions or failure to supply product as per issued documents.

.6 Listing of a product as "acceptable" does not imply automatic acceptance by the Consultant and/or Owner. It is responsibility of Contractor to ensure that any price quotations received and submittals made are for products that meet or exceed specifications included herein.

.7 If products supplied by a manufacturer named as acceptable are used in lieu of base specified manufacturer, be responsible for ensuring that they are equivalent in performance and operating characteristics (including energy consumption if applicable) to base specified products. It is understood that any additional costs (i.e. for larger starters, larger feeders, additional spaces, etc.), and changes to associated or adjacent work resulting from provision of product supplied by a manufacturer other than base specified manufacturer, is included in Bid Price. In addition, in equipment spaces where equipment named as acceptable is used in lieu of base specified equipment and dimensions of such equipment differs from base specified equipment, prepare, and submit for review accurately dimensioned layouts of rooms affected, identifying architectural and structural elements, systems and equipment to prove that equipment in room will fit properly meeting design intent. There will be no increase in Contract Price for revisions.

.8 In addition to manufacturer’s products base specified or named as acceptable, other manufacturers of products may be proposed as substitutions to the Consultant for review and consideration for acceptance, listing in each case a corresponding credit for each substitution proposed. However, base Bid Price on products base specified or named as acceptable. Certify in writing to the Consultant that proposed substitution meets space, power, design, energy consumption, and other requirements of base specified or acceptable product. It is understood that there will be no increase in Contract Price by reason of any changes to associated equipment, mechanically, electrically, structurally, or architecturally, required by acceptance of proposed substitution. Consultant has sole discretion in accepting any such proposed substitution of product. Indicate any proposed substitutions in areas provided on Bid Form. Do not order such products until they are accepted in writing by the Consultant.

.9 Where products are listed as "or approved equal", certify in writing that product to be used in lieu of base specified product, at least meets space, power, design, energy consumption, and other

requirements of base specified product and is equivalent or better than base specified product. When requested by the Consultant, provide full design detail drawings and specifications of proposed products. Acceptance of these "or approved equal" products is at sole discretion of the Consultant. It is understood that there will be no increase in Contract Price by reason of any changes to associated equipment, mechanically, electrically, structurally, or architecturally, required by acceptance of approved equal product. There must be no increase in Contract price due to Consultant's rejection of proposed equivalent product.

.10 Whenever use of product other than base specified product is being supplied, ensure corresponding certifications and product information (detailed catalogue and engineering data, fabrication information and performance characteristics) are submitted to the Consultant for review. Failure of submission of these documents to the Consultant in a timely manner to allow for review will result in base specified product to be supplied at Consultant's discretion, at no additional cost to Contract.

.11 Products supplied by a manufacturer/supplier other than a manufacturer listed as acceptable may be considered for acceptance by the Consultant if requested in writing with full product documentation submitted, a minimum of 10 working days prior to Bid closing date.

.12 Any proposed changes initiated by Contractor after award of Contract may be considered by the Consultant at the Consultant's discretion, with any additional costs for such changes if accepted by Owner and reviewed with the Consultant, and costs for review, to be borne by Contractor.

.13 Whenever use of product other than based specified products or named as acceptable is being supplied, time for process of submission of other products and Consultant's review of products will not alter contract time or delay work schedule.

1.15 SHOP DRAWINGS

.1 At start-up meeting, review with the Consultant products to be included in shop drawing submission. Prepare and submit list of products to the Consultant for review.

.2 Submit electronic copies of shop drawings unless otherwise directed by the Consultant. Coordinate exact requirements with the Consultant.

.3 Submit for review, drawings showing detail design, construction, and performance of equipment and materials as requested in Specification. Submit shop drawings to the Consultant for review prior to ordering and delivery of product to site. Include minimally for preparation and submission of following, as applicable:

.1 product literature cuts;

.2 equipment data sheets;

.3 equipment dimension drawings;

.4 system block diagrams;

.5 sequence of operation;

.6 connection wiring schematic diagrams;

.7 functionality with integrated systems.

.4 Each shop drawing or product data sheet is to be properly identified with project name and product drawing or specification reference. Shop drawing or product data sheet dimensions are to match dimension type on drawings.

.5 Where any item of equipment is required by Code or Standard or By-Law to meet a specific energy efficiency level, or any other specific requirement, ensure this requirement is clearly indicated on submission.

.6 Ensure proposed products meet each requirement of Project. Endorse each shop drawing copy "CERTIFIED TO BE IN ACCORDANCE WITH ALL REQUIREMENTS". Include company name, submittal date, and sign each copy. Shop drawings that are received and are not endorsed, dated and signed will be returned to be resubmitted.

.7 Consultant to review shop drawings and indicate review status by stamping shop drawing copies as follows:

.1 "REVIEWED" or "REVIEWED AS NOTED" (appropriately marked) – If Consultant's review of shop drawing is final, Consultant to stamp shop drawing;

.2 "RETURNED FOR CORRECTION" – If Consultant's review of shop drawing is not final, Consultant to stamp shop drawing as stated above, mark submission with comments, and return submission. Revise shop drawing in accordance with Consultant's notations and resubmit.

.8 Following is to be read in conjunction with wording on Consultant's shop drawing review stamp applied to each and every shop drawing or product data sheet submitted:

.1 "THIS REVIEW BY CONSULTANT IS FOR SOLE PURPOSE OF ASCERTAINING CONFORMANCE WITH GENERAL DESIGN CONCEPT. THIS REVIEW DOES NOT MEAN THAT CONSULTANT APPROVES DETAILED DESIGN INHERENT IN SHOP DRAWINGS, RESPONSIBILITY FOR WHICH REMAINS WITH CONTRACTOR. CONSULTANT'S REVIEW DOES NOT RELIEVE CONTRACTOR OF RESPONSIBILITY FOR ERRORS OR OMISSIONS IN SHOP DRAWINGS OR OF CONTRACTOR'S RESPONSIBILITY FOR MEETING REQUIREMENTS OF CONTRACT DOCUMENTS. BE RESPONSIBLE FOR DIMENSIONS TO BE CONFIRMED AND CORRELATED AT JOB SITE, FOR INFORMATION THAT PERTAINS SOLELY TO FABRICATION PROCESSES OR TO TECHNIQUES OF CONSTRUCTION AND INSTALLATION, AND FOR COORDINATION OF WORK OF SUB-TRADES."

.9 Submit each system and each major component as separate shop drawing submissions. Submit together, shop drawings for common devices such as devices of each system are to be submitted together.

.10 Obtain shop drawings for submission from product manufacturer's authorized representatives and supplemented with additional items specified herein.

.11 Do not order product until respective shop drawing review process has been properly reviewed with the Consultant.

.12 Where extended warranties are specified for equipment items, submit specified extended warranty with shop drawing submittal.

.13 Applicable mechanical equipment has been selected to meet energy efficiency requirements of ANSI/ASHRAE/IES 90.1, Energy Standards for Buildings, and shop drawings/product data submittals for such equipment must indicate compliance with this Standard or they will be returned for correction and re-submittal.

1.16 EQUIPMENT LOADS

.1 Supply equipment loads (self-weight, operating weight, housekeeping pad, inertia pads, etc.) to the Consultant, via shop drawing submissions, prior to construction.

.2 Where given choice of specific equipment, actual weight, location, and method of support of equipment may differ from those assumed by the Consultant for base design. Back-check equipment loads, location, and supports, and include necessary accommodations.

.3 Where supporting structure consists of structural steel framing, it is imperative that equipment loads, location, and method of support be confirmed prior to fabrication of structural steel. Review locations of equipment with the Consultant prior to construction.

1.17 OPENINGS

.1 Supply opening sizes and locations to the Consultant to allow verification of their effect on design, and for inclusion on structural drawings where appropriate.

.2 No openings are permitted through completed structure without written approval from Owner and reviewed with the Consultant. Show required openings on a copy of structural drawings. Identify

exact locations, elevations, and size of proposed openings and submit to the Consultant for review, well in advance of doing work.

.3 Prior to leaving site at end of each day, walk through areas of work and check for any openings, penetrations, holes, and/or voids created under scope of work of project, and ensure that any openings created under scope of work have been closed off, fire-stopped and smoke-sealed. Unless directed by Owner and reviewed with the Consultant, do not leave any openings unprotected and unfinished overnight.

1.18 SCAFFOLDING, HOISTING AND RIGGING

.1 Unless otherwise specified or directed, supply, erect and operate scaffolding, rigging, hoisting equipment and associated hardware required for work, and subject to approval from Owner and reviewed with the Consultant.

.2 Immediately remove from site scaffolding, rigging and hoisting equipment when no longer required.

.3 Do not place major scaffolding/hoisting equipment loads on any portion of structure without approval from Owner and reviewed with the Consultant.

1.19 CHANGES IN THE WORK

.1 Whenever Consultant proposes in writing to make a change or revision to design, arrangement, quantity, or type of work from that required by Contract Documents, prepare and submit to the Consultant for review, a quotation being proposed cost for executing change or revision.

.2 Quotation is to be a detailed and itemized estimate of product, labour, and equipment costs associated with change or revision, plus overhead and profit percentages and applicable taxes and duties.

.3 Unless otherwise specified in Division 00 or Division 01, allowable maximum percentages for overhead and profit are to be 7% and 5% respectively.

.4 Unless otherwise specified in Division 00 or Division 01, following additional requirements apply to all quotations submitted:

.1 when change or revision involves deleted work as well as additional work, cost of deleted work (less overhead and profit percentages but including taxes and duties) is to be subtracted from cost of additional work before overhead and profit percentages are applied to additional work;

.2 material costs are not to exceed those published in the latest edition of Allpriser price guide, less 20%;

.3 mechanical material labour unit costs are to be in accordance with Mechanical Contractors Association of America Labor Estimating Manual, less 25%;

.4 electrical material labour unit costs are to be in accordance with National Electrical Contractors Association Manual of Labor Units at difficult level, less 25%;

.5 costs for journeyperson and apprentice labour must not exceed prevailing rates at time of execution of Contract and must reflect actual personnel performing work;

.6 cost for site superintendent must not exceed 10% of total hours of labour estimated for change or revision, and change or revision must be such that site superintendent’s involvement is necessary;

.7 costs for rental tools and/or equipment are not to exceed local rental costs;

.8 overhead percentage will be deemed to cover quotation costs other than actual site labour and materials, and rentals;

.9 quotations, including those for deleted work, to include a figure for any required change to Contract time.

.5 Quotations submitted that are not in accordance with requirements specified above will be rejected and returned for re-submittal. Failure to submit a proper quotation to enable Consultant to expeditiously process quotation and issue a Change Order will not be grounds for any additional change to Contract time.

.6 Make requests for changes or revisions to work to Consultant in writing and, if Consultant agrees, will issue Notice of Change.

.7 Do not execute any change or revision until written authorization for the change or revision has been obtained from the Consultant.

1.20 PROGRESS PAYMENT BREAKDOWN

.1 Prior to submittal of first progress payment draw, submit a detailed breakdown of work cost to assist Consultant in reviewing and approving progress payment claims.

.2 Payment breakdown is subject to Owner's approval and Consultant's review. Progress payments will not be processed until an approved breakdown is in place. Breakdown is to include one-time claim items such as mobilization and demobilization, insurance, bonds (if applicable), shop drawings and product data sheets, commissioning including testing, adjusting and balancing, system testing and verification, and project closeout submittals.

.3 Indicate equipment, material and labour costs for site services (if applicable) and indicate work of each trade in same manner as indicated on progress draw.

1.21 NOTICE FOR REQUIRED FIELD REVIEWS

.1 Whenever there is a requirement for the Consultant to perform a field review prior to concealment of any work, to inspect/re-inspect work for deficiencies prior to Substantial Performance of the Work, for commissioning demonstrations, and any other such field review, give minimum 5 working days' notice in writing to the Consultant.

.2 If Consultant is unable to attend a field review when requested, arrange an alternative date and time.

.3 Do not conceal work until the Consultant advises that it may be concealed.

.4 When Consultant is requested to perform a field review and work is not ready to be reviewed, reimburse Consultant for time and travel expenses.

1.22 PRELIMINARY TESTING

.1 When directed by the Consultant, promptly arrange, pay for, and perform site tests on any piece of equipment or any system for such reasonable lengths of time and at such times as may be required to prove compliance with Specification and governing Codes and Regulations, prior to Substantial Performance of the Work.

.2 When, in Consultant's opinion, tests are required to be performed by a certified testing laboratory, arrange and pay for such tests.

.3 These tests are not to be construed as evidence of acceptance of work, and it is agreed and understood that no claim for delays or damage will be made for injury or breakage to any part or parts of equipment or system due to test where such injuries or breakage were caused by faulty parts and/or workmanship of any kind.

.4 When, in Consultant's opinion, tests indicate that equipment, products, etc., are defective or deficient, immediately remove such equipment and/or products from site and replace them with acceptable equipment and/or products, at no additional cost.

1.23 PROVISIONS FOR SYSTEMS/EQUIPMENT USED DURING CONSTRUCTION

.1 Permanent building mechanical systems are not to be used for temporary heating or cooling purposes during construction.

1.24 TEMPORARY SERVICES

.1 Coordinate with Prime Contractor, requirements for temporary services including but not limited to temporary heating, cooling, and water. Unless otherwise noted, provide required services in compliance with requirements of local governing building code and local governing inspection authorities.

.2 Maintain fire protection of areas which may include fire watch during temporary shutdowns of existing systems, in accordance with requirements of local governing code and local governing authorities.

1.25 MAINTAINING EQUIPMENT PRIOR TO ACCEPTANCE

.1 Maintain equipment in accordance with the manufacturer's printed instructions prior to start-up, testing and commissioning.

.2 Employ a qualified millwright to check and align shafts, drives, and couplings on all base mounted split coupled motor driven equipment.

.3 Where equipment lubrication fittings are not easily accessible, extend the fittings to accessible locations using copper or aluminium tubing.

.4 All filters are to be new upon Substantial Performance of the Work. This is in addition to any spare filters specified.

1.26 RECORD DOCUMENTATION

.1 Drawings for this project have been prepared on a CAD system using [AutoCAD] [Revit] software of release version reviewed with the Consultant. For purpose of producing record "as built" drawings, copies of Contract Drawings can be obtained from the Consultant.

.2 As work progresses at site, clearly mark in red in a neat and legible manner on a set of bound white prints of Contract Drawings, changes, and deviations from routing of services and locations of equipment shown on Contract Drawings, on a daily basis. Changes and deviations include those made by addenda, change orders, and site instructions. Use notes marked in red as required. Maintain white print red line as-built set at site for exclusive use of recording as-built conditions, keep set up-to-date at all times, and ensure set is always available for periodic review. As-built set is also to include the following:

.1 dimensioned location of inaccessible concealed work;

.2 locations of control devices with identification for each;

.3 for underground piping and ducts, record dimensions, invert elevations, offsets, fittings, cathodic protection and accessories if applicable, and locate dimensions from benchmarks to be preserved after construction is complete;

.4 for fire protection systems, record actual locations of equipment, sprinkler heads, and valves, drains, and test locations, and deviations of pipe routing and sizing from that shown on the drawings;

.5 location of piping system air vents;

.6 location of concealed services terminated for future extension and work concealed within building in inaccessible locations.

.3 Before applying for a Certificate of Substantial Performance of the Work, update a clean copy of Contract Drawing set in accordance with marked up set of "as-built" white prints including deviations

from original Contract Drawings, thus forming an "as-built" drawing set. Submit "as-built" site drawing prints to the Consultant for review. Make necessary revisions to drawings as per Consultant's comments, to satisfaction of the Consultant.

.4 Use final reviewed "as-built" drawing set to provide CAD files of drawings thus forming true "as-built" set of Contract Drawings. Identify set as "Project Record Copy". Load digital copies of final reviewed by the Consultant as-built drawings onto USB type flash drive. Provide 2 complete sets of "as-built" drawings on separate USBs. Submit "as-built" sets of white prints and USBs to Consultant.

.5 Submitted drawings are to be of same quality as original Contract Drawings. CAD drawing files are to be compatible with [AutoCAD] [Revit] software release version confirmed with the Consultant.

.6 Unless otherwise noted in Division 00 or Division 01, failure to maintain accurate record drawings will incur additional 5% holdback on progress claims until drawings are brought up to date to satisfaction of Owner and reviewed with the Consultant.

.7 For projects with phased turnover of project (refer to Division 01), review with the Consultant completeness of as-built drawings prior to turn over of an area. Interim as-built drawings to be made available to Owner's maintenance personnel.

.8 Where part of the Mechanical Scope of Work, retain and pay for services of a land surveyor registered in Place of the Work to measure, verify, and record size, location, invert elevation and pitch of buried piping services, and, when complete, transfer survey work to as-built drawings.

.9 Requirements regarding medical gas piping system as-built record drawings are as follows:

.1 Obtain from Owner, existing medical gas piping record drawings and, on a day-to-day basis, record alteration work and new work, including location of concealed piping, and, if a drawing CAD files are available, update files using compatible CAD software, in accordance with requirements of CAN/CSA Z7396.1.

1.27 OPERATION AND MAINTENANCE DATA

.1 For each item of equipment for which a shop drawing is required (except for simple equipment), supply indexed copies of equipment manufacturers' operating and maintenance (O&M) instruction data manuals. Consolidate each copy of data as a PDF file on a USB drive. Consolidated O&M manual PDF to include:

.1 front cover: project name; wording – "Mechanical Systems Operating and Maintenance Manual"; and date;

.2 introduction sheet listing Consultant, Contractor, and Subcontractor names, street addresses, telephone and fax numbers, and e-mail addresses;

.3 equipment manufacturer's authorized contact person name, telephone number and company website;

.4 Table of Contents sheet, and corresponding index tab sheets;

.5 copy of each "REVIEWED" or clean, updated "REVIEWED AS NOTED" shop drawing or product data sheet, with manufacturer's/supplier's name, telephone and fax numbers, email address, company website address, and email address for local source of parts and service; when shop drawings are returned marked "Reviewed As Noted" with revisions marked on shop drawing copies, they are to be revised by equipment supplier to incorporate comments marked on "Reviewed" shop drawings and a clean updated copy is to be included in operating and maintenance manuals;

.6 Operating data is to include:

.1 pressure test reports, and certificates issued by governing authorities;

.2 description of each system and its controls;

.3 control schematics for equipment/systems including building environmental controls;

.4 wiring and connection diagrams;

.5 if applicable, BAS architecture and all required operating data;

.6 description of operation of each system at various loads together with reset schedules and seasonal variances;

.7 operation instruction for each system and each component;

.8 description of actions to be taken in event of emergencies and/or equipment failure;

.9 valve tag schedule, and flow diagrams to indicate valve locations.

.7 Maintenance data is to include:

.1 operation and trouble-shooting instructions for each item of equipment and each system;

.2 schedules of tasks, frequency, tools required, and estimated task time;

.3 recommended maintenance practices and precautions;

.4 complete parts lists with numbers.

.8 Performance data is to include:

.1 equipment and system start-up data sheets;

.2 equipment performance verification test results, and final commissioning report;

.3 final testing, adjusting and balancing reports.

.9 copies of warranties;

.10 items requested specifically in Section Articles.

.2 Operating and maintenance instructions are to relate to job specific equipment supplied under this project and related to Owner’s building. Language used in manuals is to contain simple practical operating terms and language easy for in-house maintenance staff to understand how to operate and maintain each system.

.3 Before applying for a Certificate of Substantial Performance of the Work, assemble one copy of O&M Manual and submit to the Consultant for review prior to assembling remaining copies. Incorporate Consultant's comments into final submission.

1.28 COMMISSIONING

.1 An independent Commissioning Agent is retained by Owner to perform equipment and system commissioning work as specified in Division 01, and in Section 20 08 00 – Commissioning of Mechanical Systems. Interface, cooperate and coordinate with Owner's Commissioning Agent. Submit copies of submittals such as shop drawings/product data sheets, schedules, O&M manuals, and test reports to Commissioning Agent as required.

.1 Retain services of a testing, adjusting, and balancing agency to perform testing and balancing of mechanical system air/fluid flows and capacities, prior to operational performance testing. Refer to Section 20 05 93 – Testing, Adjusting, and Balancing for Mechanical Systems.

.2 Test, adjust and operate equipment and systems after start-up but before functional performance testing, to confirm operations are in accordance with requirements of Contract Documents. Verify modes and sequences of control and monitoring, interlocks, and responses to emergency conditions. Complete commissioning data sheets to document successful operational performance testing.

.3 Repeat successful operational performance testing with completed commissioning data sheet documentation in the presence of Consultant and Owner to validate and verify equipment and systems are complete in all respects, function correctly, and are ready for acceptance.

.4 Submit final commissioning data sheets, TAB reports as specified in Section 20 05 93 – Testing, Adjusting, and Balancing for Mechanical Systems, project closeout documents, and other required submittals.

1.29 WARRANTY

.1 Unless otherwise specified in Division 00 and Division 01, warrant mechanical work to be in accordance with Contract Documents and free from defects for a period of 1 year from date of issue of a Certificate of Substantial Performance of the Work.

.2 Where equipment includes extended warranty period, e.g., 5 years, first year of warranty period is to be governed by terms and conditions of warranty in Contract Documents, and remaining years of warranty are to be direct from equipment manufacturer and/or supplier to Owner. Submit signed and dated copies of extended warranties to the Consultant.

.3 Warranty to include parts, labour, travel costs and living expenses incurred by manufacturer's authorized technician to provide factory authorized on-site service.

.4 Repair and/or replace any defects that appear in Work within warranty period without additional expense to Owner. Be responsible for costs incurred in making defective work good, including repair or replacement of building finishes, other materials, and damage to other equipment. Ordinary wear and tear and damage caused wilfully or due to carelessness of Owner's staff or agents is exempted.

.5 Do not include Owner deductible amounts in warranties.

.6 It is understood that warranties are to commence from time of Substantial Performance of the Work, regardless of what is noted within following Sections of Specification. Be responsible for providing whatever "bridging" or additional extended warranty period is required from time that material is purchased until this time.

.7 Visit building during warranty period with Owner representatives. Owner to organize these visits. At these meetings, Owner representatives are to review performance of systems. If performance is satisfactory, then no further action needs to be taken. If unsatisfactory, then correct deficiencies, as directed by Owner representatives, to satisfaction of Owner's representatives. These site visits to occur:

.1 once during 1st month of building operation;

.2 once during 3rd month of building operation;

.3 once between 4th and 10th month in a season opposite to 1st and 3rd month visits.

1.30 CLOSEOUT SUBMITTALS

.1 Prior to application for Substantial Performance of the Work, submit required items and documentation specified, including following as applicable to the project:

.1 Operating and Maintenance Manuals;

.2 as-built record drawings and associated data;

.3 extended warranties for equipment as specified;

.4 operating test certificates, i.e. Sprinkler Test Certificate;

.5 final commissioning report and TAB report;

.6 identified keys for equipment and/or panels for which keys are required, and other items required to be submitted;

.7 other data or products specified.

1.31 INSTRUCTIONS TO OWNER

.1 Refer to equipment and system operational and maintenance training requirements specified in Division 01.

.2 Train Owner's designated personnel in aspects of operation and maintenance of equipment and systems as specified, including temporary mechanical equipment. Demonstrations and training are to be performed by qualified technicians employed by equipment/system manufacturer/supplier. Supply hard copies of training materials to each attendee.

.3 Provide training to Owner as specified in trade Sections on the operation and maintenance procedures of mechanical systems and equipment.

.4 For each item of equipment and for each system for which training is specified, prepare training modules as specified below. Use Operating and Maintenance Manuals during training sessions. Training modules include but are not limited to:

.1 Operational Requirements and Criteria – equipment function, stopping and starting, safeties, operating standards, operating characteristics, performance curves, and limitations;

.2 Troubleshooting – diagnostic instructions, test and inspection procedures;

.3 Documentation – equipment/system warranties, and manufacturer's/supplier's parts and service facilities, telephone numbers, email addresses, and the like;

.4 Maintenance – inspection instructions, types of cleaning agents to be used as well as cleaning methods, preventive maintenance procedures, and use of any special tools;

.5 Repairs – diagnostic instructions, disassembly, component removal and repair instructions, instructions for identifying parts and components, and review of any spare parts inventory.

.5 Before instructing Owner's designated personnel, submit to the Consultant for review preliminary copy of training manual and proposed schedule of demonstration and training dates and times. Incorporate Consultant's comments in final copy.

.6 Obtain in writing from the Consultant list of Owner's representatives to receive instructions. Submit to Consultant prior to application for Certificate of Substantial Performance of the Work, complete list of systems for which instructions were given, stating for each system:

.1 date instructions were given to Owner's staff;

.2 duration of instruction;

.3 names of persons instructed;

.4 other parties present (manufacturer's representative, consultants, etc.).

.7 Obtain signatures of Owner's staff to verify they properly understood system installation, operation, and maintenance requirements, and have received operating and maintenance instruction manuals and "as-built" record drawings.

.8 Submit to the Consultant copy of electronic version of training materials and include in operating and maintenance manuals submission.

1.32 FINAL INSPECTION

.1 Submit to Consultant, written request for final inspection of systems. Include written certification that:

.1 deficiencies noted during job inspections have been completed;

.2 field quality control procedures have been completed;

.3 systems have been tested and verified, balanced, and adjusted, and are ready for operation;

.4 maintenance and operating data have been completed and submitted to, reviewed with the Consultant and accepted by Owner;

.5 tags and nameplates are in place and equipment identifications have been completed;

.6 clean-up is complete;

.7 spare parts and replacement parts specified have been provided and acknowledged by the Consultant;

.8 as-built and record drawings have been completed and submitted to and reviewed with the Consultant and accepted by Owner;

.9 Owner's staff has been instructed in operation and maintenance of systems;

.10 commissioning procedures have been completed.

PART 2 - PRODUCTS – NOT USED

PART 3 - EXECUTION

3.1 CLEANING

.1 During construction, keep site reasonably clear of rubbish and waste material resulting from work on a daily basis to the satisfaction of Owner and Consultant. Before applying for a Certificate of Substantial Performance of the Work, remove rubbish and debris, and be responsible for repair of any damage caused as a result of work.

.2 Clean equipment and devices installed as part of this project.

END OF SECTION

PART 1 - GENERAL

1.1 SECTION INCLUDES

.1 Motors and starters for all equipment specified in Mechanical Divisions.

1.2 RELATED REQUIREMENTS

.1 Section 26 05 83 – Wiring Connections.

1.3 SUBMITTALS

.1 Submit shop drawings/product data sheets for:

.1 electric motors (submit with equipment they are associated with).

.2 Submit a list of equipment identification nameplates indicating proposed wording and sizes.

PART 2 - PRODUCTS

2.1 EQUIPMENT BELT DRIVES

.1 ANSI/RMA Standard V-belt type rated at minimum 1.5 times motor nameplate rating, and in accordance with following requirements:

.1 belts are to be reinforced cord and rubber, and multiple belts are to be matched sets;

.2 sheaves are to be cast iron or steel, secured to shafts with removable keys unless otherwise specified, standard adjustable pitch (± 10% range) for motors under 10 hp, fixed pitch type with split tapered bushing and keyway for motors 10 hp and larger, and, if required, replaced as part of mechanical work to suit system air/water quantity testing and balancing work;

.3 motor slide rail adjustment plates are to allow for centre line adjustment.

.2 Supply a spare belt set (tagged and identified) for each belt drive and hand to Owner upon Substantial Performance of the Work.

2.2 EQUIPMENT DRIVE GUARDS AND ACCESSORIES

.1 For V-belt drives – removable, 4-sided, fully enclosed, galvanized sheet steel guards to OHSA standards, cleaned, factory primed and painted with yellow equipment enamel, complete with a 2-piece full length hinged front panel to permit belt maintenance or replacement without removing guard, and 40 mm (1-½") diameter tachometer openings at each shaft location.

.2 For flexible couplings – removable "U" shaped galvanized steel guards to OHSA Standards with a 2.3 mm (3/32") thick frame and expanded mesh face.

.3 For unprotected fan inlets and outlets – unless otherwise specified, removable 20 mm (¾") galvanized steel wire mesh with galvanized steel frames, all to OHSA Standards.

2.3 ELECTRIC MOTORS

.1 Unless otherwise specified, motors are to conform to NEMA Standard MG 1, applicable IEEE Standards, and applicable CSA C22.2 standards, and are to meet NEMA standards for maximum sound level ratings under full load. Confirm motor voltages prior to ordering.

.2 Vertically mounted and submersible motors are to be purposely designed for mounting in this attitude.

.3 Efficiency of 1-phase motors to 1 hp is to be in accordance with CAN/CSA C747. Efficiency of 3-phase motors 1 hp and larger is to be in accordance with CAN/CSA C390 or IEEE 112B.

.4 Unless otherwise specified, 1-phase motors smaller than ½ hp are to be 115 V, continuous duty capacitor start type with an NEMA 48 or 56 frame size, solid base, heavy-gauge steel shell with solid die-cast end shields, dynamically balanced die-cast rotor, integral automatic reset thermal overload protection, Class "B" insulation, and a 1.15 service factor at 40°C (105°F) ambient temperature.

.5 Explosion-proof 1-phase motors are to be totally enclosed, fan cooled, 115 V continuous duty capacitor start type in accordance with CSA C22.2 No. 145, as specified for standard 1-phase motors but suitable for use in Class 1 Group D hazardous locations and complete with a rolled steel shell and a 1.0 service factor at 40°C (105°F) ambient temperature.

.6 Unless otherwise specified, motors ½ hp and larger are to be totally enclosed, fan cooled, 3-phase, T-frame, squirrel cage continuous duty induction motors suitable for voltages indicated on Drawings, NEMA Design "B" for normal starting torque or Design "C" for high starting torque as required by the application, each complete with Class "B" insulation, a 1.15 service factor at 40°C ambient temperature, grease lubricated open ball bearings with grease fittings to permit re-lubrication without dismantling motor, a cast iron frame with cast iron feet where required, cast iron end bracket and precision machined bearing fit, and balanced carbon steel shaft assembly with die-cast aluminum rotor windings.

.7 Explosion-proof 3-phase motors are to be totally enclosed fan cooled motors in accordance with CSA C22.2 No. 145, generally as specified above for standard 3-phase motors but suitable for use in Class 1 Group D hazardous locations and with a 1.0 service factor at 40°C (105°F) ambient temperature.

.8 Motor(s) for 2-speed fan(s) are to be as above but 2-speed double winding type.

.9 Motors for equipment with variable frequency drives are to be generally as specified above but inverter duty type to NEMA Standard MG 1 Part 31, quantified by CSA for operation from a variable frequency drive of type specified, and complete with Class "H" insulation. Motors are to be equipped with AEGIS, or approved equal, shaft grounding ring system to protect bearings from damage by diverting harmful shaft voltages and bearing currents to ground.

.10 Manufacturers:

.1 TECO-Westinghouse Motors (Canada) Inc.;

.2 Canadian General Electric;

.3 Baldor Electric Co.;

.4 U.S. Electrical Motors;

.5 Weg Electric Corp.;

.6 Marathon Electric;

.7 Toshiba Corp.;

.8 Leeson Canada.

2.4 MOTOR STARTERS AND ACCESSORIES

.1 Motor starters must be capable of starting associated motors under the imposed loads. Confirm starter voltage matches motor prior to ordering.

.2 Unless otherwise specified, starters for 1-phase motors are to be 115 V, thermal overload protected manual starting switches with a neon pilot light, a surface or recessed enclosure to suit the application, and, where automatic operation is required, a separate H-O-A switch in an enclosure to match starter enclosure.

.3 Unless otherwise specified, starters for 3-phase motors less than 50 hp are to be combination "quick-make" and "quick-break" fused disconnects and full voltage non-reversing across-the-line starters, each complete with and overload relay per phase, an enclosure to suit the application, and,

a H-O-A switch, pilot lights, control transformer, auxiliary contacts, and other accessories as per motor starter schedule.

.4 Unless otherwise specified, starters for 3-phase motors 50 hp to 150 hp are to be reduced voltage, non-reversing, auto-transformer type starters complete with one overload relay per phase, an enclosure to suit the application, and, a H-O-A switch, pilot lights, control transformer, auxiliary contacts, and other accessories as per motor starter schedule.

.5 Unless otherwise specified, starters for 3-phase motors 150 hp and larger are to be reduced voltage, non-reversing, closed transition "wye-delta" starters complete with one overload relay per phase, an enclosure to suit the application, and, a H-O-A switch, pilot lights, control transformer, auxiliary contacts, and other accessories as per motor starter schedule.

.6 Starters for 2-speed double winding motors are to be generally as specified above but suitable for motor and equipped with a 45 second time delay to permit equipment to coast down to low speed before it is operated at low speed.

.7 Starters for 2-speed single winding motors are to be generally as specified above but suitable for motor and equipped with a 45 second time delay to permit equipment to coast down to low speed before it is operated at low speed.

.8 Starters for reversible motors for cooling towers are to be generally as specified above but suitable for motor and equipped with a 45 second time delay to allow fan(s) to coast down to a stop before being operated in reverse rotation.

.9 Unless otherwise specified, motor starter enclosures are to be in accordance with following NEMA ratings:

.1 enclosures located in sprinklered areas – Type 2;

.2 enclosures exposed to the elements – Type 3R, constructed of stainless steel;

.3 enclosures inside the building in wet areas – Type 3R, constructed of stainless steel;

.4 enclosures in explosion rated area – Type 7 with exact requirements to suit the area and application;

.5 enclosures except as noted above – Type 1;

.6 enclosures located in finished areas – as above but recess type with brushed stainless steel faceplate.

.10 Motor control centres are to be multi-unit, 2.28 m (9') high, NEMA Class 1, type "B", factory assembled, dead front, floor mounted, free-standing motor control centre with tin plated copper bus and an NEMA Type 1 or Type 2 enclosure as for loose starters specified above. Each motor control centre is to be complete with starters as specified above, load and control wiring terminal boards, and required facilities for line and load side power wiring connections.

.11 Disconnect switches for motor control centres are to be heavy-duty, CSA certified, front operated switches as per motor starter schedule, each complete with a handle suitable for padlocking in "off" position and arranged so that door cannot be opened with handle in "on" position and an NEMA enclosure as specified for loose starters. Fusible units are to be complete with fuse clips to suit fuse types specified below.

.12 Fuses are to be, unless otherwise scheduled or specified, English Electric Ltd. HRC fuses, Form I Class "J" for constant running equipment and Form II Class "C" for equipment that cycles on and off.

.13 Manufacturers:

.1 Rockwell Automation Inc. - Allen-Bradley;

.2 Eaton Corp. – Cutler-Hammer;

.3 Eaton Corp. – Moeller Electric;

.4 Siemens Canada;

.5 Schneider Electric.

2.5 SPRINKLER PROOFING

.1 Provide drip shields for protection of surface mounted equipment enclosures from water spray and dripping of liquids. Features of shields include:

.1 factory constructed by respective equipment manufacturers;

.2 constructed from non-combustible materials (sheet steel);

.3 enamel painted to match equipment;

.4 surfaces and edges filled/sanded smooth prior to painting;

.5 supported from equipment with structural steel rods/metal framing or other method approved by Consultant;

.6 structural support finish painted to match shield.

.2 Include with equipment shop drawings, detailed dimensions of drip shields and methods of supporting.

.3 Equipment with top cable/conduit entries to include additional sealing of entries with gasketting and/or waterproof sealant to prevent water from entering enclosure.

.4 Design ventilation louvers such that live components are not exposed to water spray and dripping liquids.

.5 Above requirements are additional minimum "sprinkler proof" standards for equipment specified as NEMA 1, 2 or 12.

.6 Obtain CSA approval where required by local governing authorities.

PART 3 - EXECUTION

3.1 INSTALLATION OF EQUIPMENT DRIVE GUARDS AND ACCESSORIES

.1 Provide OHSA guards for exposed accessible rotating parts such as belt drives, couplings, fan wheels, and shaft ends on mechanical equipment.

.2 Install belt guards to allow movement of motors for adjusting belt tension.

.3 Provide a means to permit lubrication and use of test instruments with guards in place.

.4 Secure guards to equipment or equipment base but do not bridge sound or vibration isolation.

.5 Where equipment oil level gauges, oil reservoirs, grease cups, or grease gun fittings are integral with equipment but are not easily accessible for service, extend to an accessible location using aluminium or copper tubing.

3.2 SUPPLY OF MOTOR STARTERS AND ACCESSORIES

.1 Unless otherwise shown or specified, supply a starter for each item of motorized equipment. Refer to Motor Starter Schedule.

.2 Where 3-phase starters are indicated in motor control centres, supply motor control centres with starters and bolt to a concrete housekeeping pad.

.3 Where package type equipment with integral starters, or equipment with starters integral in loose power and control panels supplied with equipment is fed from a motor control centre, provide a disconnect switch in motor control centre in lieu of a motor starter.

.4 Where 3-phase starters are indicated and/or scheduled to be mounted on a motor starter panel, starters will be mounted and connected, complete with panels and splitter trough, as part of electrical work. Hand starters to electrical trade at site when they are required.

.5 Where package type equipment with integral starters, or equipment with starters integral in loose power and control panels supplied with equipment is fed from a motor starter panel, a disconnect switch will be provided on motor starter panel as part of electrical work.

.6 Unless otherwise specified or shown on drawings, 1-phase motor starters will be mounted adjacent to equipment they serve and connected complete as part of electrical work. Hand starters to electrical trade at site at the proper time.

3.3 ELECTRICAL WIRING WORK FOR MECHANICAL WORK

.1 Unless otherwise specified or indicated, following electrical wiring work for mechanical equipment will be done as part of the electrical work:

.1 "line" side power wiring to motor starters or disconnect switches in motor control centres and starters or disconnects on motor starter panels, and "load" side wiring from starters or disconnects to equipment.

.2 "line" side power wiring to individual wall mounted starters, and "load" side wiring from starters to equipment.

.3 "line" side power wiring to pre-wired power and control panels and variable frequency drives (VFD), and "load" side power wiring from the panels and VFD's to equipment.

.4 provision of receptacles for plug-in equipment.

.5 provision of disconnect switches for motors in excess of 10 m (30 ft) from starter location, or cannot be seen from starter location, and associated power wiring.

.6 motor starter interlocking in excess of 24 V.

.7 wiring from motor winding thermistors in motors 30 hp and larger to motor starter contacts.

.8 120 V power connections to electrical receptacles integral with small ceiling exhaust fans.

.9 120 V power connections to small exhaust fans, and ceiling fans for all line voltage control devices, including but not limited to wiring through toggle switches, line voltage thermostats, countdown timer switches, or line voltage speed controllers. Coordinate requirements with Electrical Division.

.10 120 V wiring connections to lighting fixture/switch combinations integral with air handling units.

.11 120 V wiring connections to duplex receptacles integral with air handling unit control panels.

.12 120 V wiring connections to BAS system controllers/panels and other control system or component requiring 120 V power including, but not limited to, VAV boxes, dampers, low voltage transformers, etc.

.2 Mechanical wiring work not listed above or specified herein or on drawings to be done as part of electrical work is to be installed in conduit and is to be done as part of mechanical work in accordance with wiring requirements specified for electrical work.

END OF SECTION

PART 1 - GENERAL

1.1 SECTION INCLUDES

.1 Variable Frequency Drives (VFD's) for all equipment specified in Mechanical Divisions.

1.2 SUBMITTALS

.1 Shop Drawings/Product Data: Submit shop drawings with product data sheets for variable frequency drives (VFDs). Include:

.1 construction and performance details;

.2 wiring and control schematics;

.3 dimensions of units;

.4 calculations specific to installation showing total harmonic voltage distortion is less than 5%;

.5 certified production test results with serial numbers for harmonic mitigation performance and energy efficiency under actual variable frequency drive loading.

1.3 CLOSEOUT SUBMITTALS

.1 Certification Letter: Submit a start-up and installation certification letter from supplier of VFDs as specified in Part 3 of this Section;

.2 Parameters: Prepare list of parameters for uploading for Owner's future use as specified in Part 3 of this Section. Load on USB type flash drive and submit to the Consultant.

.3 Extended Warranty: Where extended warranty is specified to be included, include a copy of VFD extended warranty in each Operating and Maintenance Manual. Prior to Substantial Performance of Work, submit a copy of warranty to Owner.

.4 Additionally, coordinate with Prime Contractor and Electrical Contractor to ensure that shop drawings clearly identify that proposed VFDs and connected motors are 100% compatible and Mechanical Contractor to sign off on selected VFDs.

1.4 COORDINATION WITH ELECTRICAL DIVISIONS

.1 This Section specifies VFD requirements for motors. Ensure that VFDs packaged with various system equipment, complies with specifications of this Section.

.2 VFDs are each to be approved by respective manufacturers of VFDs and connected motors, as suitable for installation on scheduled motors. VFD output current rating to match or exceed connected motor nameplate full load current rating.

.3 Coordinate and review with Electrical Divisions, responsibility requirements for supply of VFDs, harmonic filters and requirements for control and power conductors and connections.

.4 Check that motors are equipped with AEGIS or approved equal, shaft grounding ring system to protect bearings from damage in motors by diverting harmful shaft voltages and bearing currents to ground.

.5 Additionally, review and confirm responsibilities with Consultant and Prime Contractor.

1.5 WARRANTY

.1 VFDs to be warranted free from defective labour and materials for period of 36 months from date of Substantial Performance of the Work. Include for initial one year Contract warranty and an additional 2 year extended warranty direct to Owner. Extended warranty terms and conditions are to be identical to one year Contract warranty, and extended warranty period is to commence day Contract warranty expires.

PART 2 - PRODUCTS

2.1 VFD BASIC REQUIREMENTS

.1 VFDs supplied on project to be products of same manufacturer and be CSA approved, ULC listed and labelled. Base specified product is ABB ACH series units that include compliance with following standards:

.1 CSA C22.2 No.14 Industrial Control Equipment;

.2 UL 508 - Industrial Control Equipment;

.3 UL 508C – Power Conversion Equipment;

.4 NEMA ICS 7 - Adjustable-Speed Drives.

.2 Basis for limiting harmonics is to be provided generally to IEEE Standard 519 - Recommended Practices and Requirements for Harmonic Control in Electrical Power Systems, except intended for user's electrical distribution system with point of common coupling (where harmonic limits are assessed) to be set at input terminals of harmonic mitigating equipment.

.3 VFDs to include following basic requirements:

.1 regardless of horsepower (hp) rating are to be of same VFD model; I/O and control circuit boards as well as keypads are to be identical and interchangeable regardless of hp rating;

.2 to be capable of starting into a coasting load (forward or reverse) up to full speed and accelerate or decelerate to set point without safety tripping or component damage (flying start);

.3 6-pulse width modulated (PWM) AC to AC converter utilizing latest isolated gate bipolar transistor (IGBT) technology; PWM switching pattern to include a motor flux optimization circuit that automatically reduces applied motor voltage to the motor to optimize energy consumption and audible motor noise;

.4 carrier frequency control circuit that reduces the carrier frequency based on actual VFD temperature that allows higher carrier frequency without derating VFD or operating at high carrier frequency only at low speeds;

.5 provisions that determine motor torque and flux every 25 µs (40,000 times per second);

.6 completely assembled and tested by manufacturer in their facility;

.7 designed to provide at least 250,000 hours mean time before failure (MTBF) when specified preventative maintenance is performed.

.8 bypass system completely factory wired and tested;

.9 door interlocked padlockable disconnect switch that disconnects all input power from drive and all internally mounted options;

.10 control panel keyboard and display with password protection against parameter changes.

.11 fused disconnect integral to VFD enclosure complete with fast acting fuses sized by VFD manufacturer for size of motor connected to VFD.

2.2 VFD RATINGS

.1 VFDs to be rated to operate from 3-phase input voltage of 208 V or 600 V ± 10%, as scheduled, and frequency range from 48 Hz to 63 Hz. In addition, a tolerated voltage window to allow system to operate from a line of +30% to -35% nominal voltage. System to incorporate circuitry that allows drive or bypass contactor to remain "sealed in" over this voltage tolerance at a minimum.

.2 VFDs to employ a full wave rectifier to prevent input line notching and operate at a minimum fundamental input power factor of 0.97 at all speeds and loads.

.3 VFDs efficiency to be 96% or better at full speed and load.

.4 Output voltage and current ratings to match adjustable frequency operating requirements of standard 3-ph, 60 Hz, NEMA design B inverter-duty motors in compliance with NEMA-MG1, Part 31 Standard. Overload current capacity for variable torque overload capacity to be 110% of rated current for 1 minute out of 10 minutes and 130% for 2 seconds. Output frequency to be adjustable between 0 Hz and 500 Hz.

.5 Open loop static speed regulation to be 0.1% to 0.3% (10% of motor slip). Dynamic speed accuracy to be 4%-sec. or better open loop.

.6 When a suitable motor is used, drive provides breakaway torque equal to 200% of rated motor torque. Torque response time to be 5 ms or less.

.7 Enclosures:

.1 in climate controlled areas – minimum NEMA 12 with drip shield;

.2 in non-climate controlled areas – NEMA 3R.

2.3 HARMONIC FILTERS AND SINE WAVE FILTERS

.1 VFDs to include internal 5% impedance AC line reactor (or equivalent 5% impedance dual positive and negative DC bus reactors) provided as a standard to reduce input current harmonic content and provide isolation from power line transients and to reduce RFI emissions.

.2 VFDs serving motors sized 11 kW (15 hp) or more to be provided with harmonic filters to limit harmonics distortion produced by each drive to following maximum levels as measured on input side of drive:

.1 Total harmonic distortion (voltage) – 5%;

.2 Total harmonic distortion (current) – 10%.

.3 Harmonic filter to be based on MIRUS International Inc. “LINEATOR AUHF” series, with features as follows:

.1 manufactured and tested in accordance with latest applicable standards of ULC, CSA and NEMA;

.2 treat characteristic low frequency harmonics generated by a 3-phase, diode bridge rectifier load (5th, 7th, 11th, 13th, etc.);

.3 passive inductor/capacitor network;

.4 low capacitive reactance (KVAR) of less than 20% of kVA rating, to ensure compatibility with engine generator sets;

.5 full load efficiency of harmonic mitigation equipment / VFD combination to be greater than 96%;

.6 copper wiring;

.7 220°C system insulation class and temperature rise of 130°C;

.8 anti-vibration pads between reactor or transformer core and enclosure;

.9 manufacturer’s standard ventilated, NEMA-3R enclosure.

.10 For fan arrays provide single harmonic filter sized for the entire connected load

.4 Sine wave filters are to be provided with all VFDs and to be based on MIRUS International Inc. “INVERSINE” series, complete with the following features:

.1 manufactured and tested in accordance with latest applicable standards of ULC, CSA and NEMA;

.2 no less than 99% efficiency;

.3 voltage distortion of 3% typical, max 5% at full load and rated frequency;

.4 less than 8% input current distortion at full load;

.5 Switching frequencies of 1kHz to 16kHz

.6 overload capacity of 150% for 60 seconds every 60 minutes;

.7 voltage suitable for motor;

.8 design maximum operating temperature rise shall be 130 deg C above maximum ambient temperature of 40 deg C.;

.9 copper wiring wound on magnetic core;

.10 Inductors shall be air-gapped to control magnetic saturation. The inductance shall remain above 50% of its nominal value for any overload not exceeding 200% of rated current;

.11 Capacitors shall be AC rated, polypropylene film material, and self-healing technology. Connected in ungrounded neutral Y (wye) or delta configuration;

.12 manufacturer's standard ventilated, sprinkler proof, NEMA-3R enclosure.

.13 shall be complete with wiring lugs suitable for wiring size indicated on electrical drawings.

2.4 CONTROLS AND ADJUSTMENT FUNCTIONS

.1 Include for following:

.1 programmable critical frequency lockout ranges to prevent VFD from operating load continuously at an unstable speed;

.2 proportional integral derivative (PID) speed loop regulators with an auto tune function as well as manual adjustments; PID set point controllers to allow pressure or flow signals to be connected to VFD, using microprocessor in VFD for closed loop control; includes 250 mA of 24 VDC auxiliary power and capability of loop powering a transmitter supplied by others; two parameter sets for first PID that allow sets to be switched via a digital input, serial communications or from keypad for night setback, summer/winter set points, etc.; independent, second PID loop that can utilize second analogue input and modulate analogue outputs to maintain set point of an independent process (i.e. valves, dampers, etc.); set points, process variables, etc. to be accessible from serial communication network;

.3 programmable analogue inputs that accept current or voltage signals.

.4 programmable analogue outputs (0-20 mA or 4-20 mA), that may be programmed to output proportional to Frequency, Motor Speed, Output Voltage, Output Current, Motor Torque, Motor Power (kW), DC Bus voltage, Active Reference, and other data;

.5 programmable digital inputs;

.6 programmable digital Form-C relay contact outputs for programmable on and off delay times and adjustable hysteresis; rated for maximum switching current 8 A at 24 VDC and 0.4 A at 250 VAC; maximum voltage 300 VDC and 250 VAC; continuous current rating 2 A RMS;

.7 run permissive circuit - for damper or valve control; dry contact closure that will signal damper to open (VFD motor does not operate); when damper is fully open, a normally open dry contact (end-switch) closes; closed end-switch is wired to a VFD digital input and allows motor operation; two separate safety interlock inputs, when either is opened, motor to coast to stop, and damper to close;

.8 two independently adjustable accel and decel ramps with 1-1800 seconds adjustable time ramps;

.9 fireman's override input - upon receipt of a contact closure from fireman's control station, VFD operates in one of two modes: operate at a programmed predetermined fixed speed or operate in a specific fireman's override PID algorithm that automatically adjusts motor speed based on override set point and feedback; mode overrides all other inputs (analogue/digital, serial communication and keypad commands), except customer defined safety run interlock, and

forces motor to run in one of the two modes; "Override Mode" to be displayed on control panel; upon removal of override signal, VFD resumes normal operation.

.2 Operator Control Panel:

.1 front mounted plug-in operator control panel consisting of keypad, multi-line backlit LCD display for programming and fault diagnostics;

.2 keys (switches) for HAND, OFF, AUTO, and manual speed control INCREASE/DECREASE;

.3 menu navigation and parameter selection keys for custom programming;

.4 date and time clock - clock to have a battery backup with 10 years minimum life span; clock to be used to date and time stamp faults and record operating parameters at time of fault; if battery fails VFD l automatically reverts to hours of operation since initial power up; clock also to be programmable to control start/stop functions, constant speeds, PID parameter sets and output relays; VFD to have a digital input that allows an override to time clock (when in off mode) for a programmable time frame; four (4) separate, independent timer functions that have both weekday and weekend settings;

.5 parameter names, fault messages, warnings and other information to be displayed in complete words or standard abbreviations to allow user to understand what is being displayed without use of a manual or cross reference table, as follows:

.1 “HAND” position to start drive and modify reference frequency by use of INCREASE/DECREASE keys;

.2 “OFF” position stops drive;

.3 "AUTO" position allows drive to be started or stopped using whichever remote start/stop command configured; drive speed controlled by external speed reference input or by PID controller.

.4 applicable operating values to be capable of being displayed in engineering (user) units; operating displayed include:

.1 Output Frequency;

.2 Motor Speed (RPM, %, or Engineering units);

.3 Motor Current;

.4 Drive Temperature;

.5 DC Bus Voltage;

.6 Output Voltage.

2.5 PROTECTIVE FUNCTIONS

.1 For each programmed warning and fault protection function, keypad displays a message in complete words or standard abbreviations.

.2 VFDs include metal oxide varistors (MOV’s) for phase to phase and phase to ground line voltage transient protection.

.3 Short circuit current rating of 100,000 amps to be provided per UL 508C without relying on line fuses.

.4 Ground fault protection, motor phase loss protection and phase unbalance protection to be provided. Single phase protection to be provided on input and output.

.5 VFDs to provide electronic motor overload protection qualified per UL 508C.

.6 Protection to be provided for AC line or DC bus overvoltage at 130% of maximum rated or undervoltage at 65% of minimum rated.

.7 Stall protection to be programmable to provide a warning or stop VFD after motor has operated above a programmable torque level for a programmed time limit.

.8 Underload protection to be programmable to provide a warning or stop VFD after motor has operated below a selected underload curve for a programmed time limit.

.9 Overtemperature protection to provide a warning if power module temperature is less than 5°C (9°F) below overtemperature trip level.

.10 Input terminal to be provided for connecting a motor thermistor (PTC type) to drive's protective monitoring circuitry. An input to also be programmable to monitor an external relay or switch contact.

.11 VFDs through 56 kW (75 hp) to be protected from damage from input and output power miss-wiring. VFD to sense this condition and display an alarm on control panel.

.12 EMI / RFI filters to be provided as per standard EN 61800-3.

.13 dv/dt long lead filter (LRC) to protect power system network.

.14 Automatic reset feature to automatically reset selected faults and attempt to restart drive based on control parameters such as adjustable time delays, number of restart attempts and duration of restart attempts. Faults include following:

.1 Overcurrent;

.2 Overvoltage;

.3 Undervoltage;

.4 Analogue input signal reference loss;

.5 External fault.

.15 Additional built-in protection circuits include:

.1 Overcurrent trip limit;

.2 Undervoltage trip limit;

.3 Microprocessor fault;

.4 Keypad control panel loss;

.5 Serial communication loss;

.6 External fault interlock inputs;

.7 Adjustable output frequency and motor speed limits;

.8 Pass code parameter change protection;

.9 Keypad operator control lockout.

2.6 MANUAL BYPASS

.1 Manual bypass required for all fans.

.2 Bypass system to be a fully operational horsepower rated manual system for full speed operation without VFD, with following components:

.1 VFD and By-pass output contactors, mechanically and electrically interlocked to allow only one mode of operation at one time;

.2 service switch or contactor to isolate VFD from supply;

.3 VFD input fuses;

.4 door mounted VFD/OFF/BY-PASS selector switch;

.5 VFD ON and BY-PASS ON indicator lights;

.6 door mounted HAND/OFF/AUTO switch if Hand operation is unavailable at VFD control panel;

.7 terminals for external customer safety interlocks.

.3 Bypass designs, which have no VFD only fuses, or that incorporate fuses common to both VFD and bypass are not acceptable.

.4 Door interlocked padlockable fused disconnect switch that supplies power to VFD and bypass, and disconnects input power from drive, bypass and all internally mounted devices.

2.7 COMMUNICATIONS

.1 VFD to be complete with communications connections of integrated RS-485 port suitable to allow for VFD to be controlled, supervised, monitored and programmed from one remote control panel or PC with VFD system Windows based application software.

.2 Communications protocol to be industry standard compatible to BAS of building. Coordinate exact requirements with Mechanical Divisions controls contractor and BAS vendor to ensure that appropriate interface module is supplied for drive system to communicate with BAS being used in building with interface capability to include serial communication standard protocols as follows:

.1 ModBus;

.2 Johnson Controls Metasys N2;

.3 Siemens Building Technologies FLN;

.4 BACnet.

.3 Serial communication to be used for drive setup, diagnostic analysis, monitoring and control with capabilities to include, but not be limited to:

.1 run-stop control;

.2 speed set adjustment;

.3 proportional/integral/derivative PID control adjustments;

.4 current limit;

.5 accel/decel time adjustments;

.6 ability to lock and unlock control panel keypad;

.7 capability of allowing BAS to monitor feedback such as process variable feedback, output speed / frequency, current (in amps), % torque, power (kW), kilowatt hours (resettable), operating hours (resettable), and drive temperature;

.8 monitoring relays output status, and digital input status and analogue output values;

.9 transmitting diagnostic warning and fault information over communications bus to BAS or other monitoring system;

.10 remote fault reset.

2.8 SITE SERVICES, TRAINING, AND MAINTENANCE MANUALS

.1 Provide onsite inspection, testing, start up and verification work of VFDs and filters by manufacturer’s authorized technician. Allow a minimum of 1/2 day per system. Also include for a second visit to site of one (1) day duration to train operating personnel in operation and maintenance of drives. Provide verification reports and supply soft copy of system programming parameters.

.2 Upon completion of installation, supplier of VFDs to supply minimum one hard copy of complete sets of service and maintenance manuals including wiring and connection diagrams. Include for digital copy loaded onto a USB type flash drive.

.3 Provide system training and instructions on operating and maintenance procedures. Refer to additional requirements in General Instructions section and Division 01.

.4 Include for manufacturer's authorized technician to be in attendance to assist Commissioning Agent during commissioning process.

2.9 MANUFACTURERS

.1 Manufacturer List:

.1 ABB;

.2 Schneider Electric (Square D);

.3 Rockwell Automation;

.4 Eaton Cutler Hammer;

.5 Siemens Electric;

.6 Control Techniques.

.7 Danfoss.

PART 3 - EXECUTION

3.1 INSTALLATION OF VARIABLE FREQUENCY DRIVES

.1 Provide variable frequency drives for motorized equipment in accordance with drawing requirements. Coordinate requirements for conductors and connections with Electrical Divisions Contractor.

.2 Ensure that variable speed drives supplied are products of same manufacturer.

.3 Ensure wire length between VFD and motor is less than 15 m (50') with properly sized conductors.

.4 Install VFDs in accordance with manufacturer's instructions. Ensure that VFDs installation include upstream protection, either fuses or circuit breakers in accordance with VFD manufacturer's recommendations and local electrical code requirements. Advise Electrical Divisions Contractor of these requirements in addition to required conductors and connections. Provide required control wiring and connections.

.5 Review VFD and related connected motor installation. Provide local disconnect to VFD in accordance with local governing code requirements.

.6 Mount VFDs operating controls/display at approximately 1.5 m (5') above finished floor level, unless otherwise directed by the Consultant. Provide dual back to back C-channel support system from floor to ceiling, complete with cross bracing to form a solid backing for VFD mounting at required locations.

.7 Properly support VFDs. Coordinate exact locations on site with the Consultant.

.8 Where VFDs are required for custom made air handling units VFDs to be supplied, factory mounted on fan cabinets, and "load" side connected to fan motors by air handling unit manufacturer. "Line" side power wiring to these VFDs to be provided as part of Electrical Divisions work.

.9 Where VFDs are required for commercial fans, mount each VFD generally where shown but with exact location to ensure that VFD is accessible in accordance with local governing electrical code requirements. "Line" and "load" side power wiring to these VFD's to be provided as part of Electrical Divisions work.

.10 Install harmonic mitigation filter equipment as follows:

.1 in accordance with manufacturer's recommended installation practices and to comply with applicable local governing codes;

.2 provide each VFD as specified in per Part 2, with a harmonic filter sized as per manufacturer's rating table to match rating of connected VFD;

.3 mount harmonic filters sized up to 110 kW (150 hp) typically to wall/ceiling construction using suitable brackets, metal C-channel framework and vibration isolators assemblies, ensuring full support of units acceptable to local governing authorities;

.4 mount harmonic filters sized greater than 110 kW (150 hp) typically to floor mounted concrete pads with suitable vibration isolators and seismic restraints in accordance with local governing building codes;

.5 ensure that adequate ventilation and space for access is provided;

.6 review exact locations with the Consultant prior to installation;

.7 coordinate with Electrical Division Contractor to ensure units are connected complete to line side supply feed and to VFD in accordance with VFD manufacturer's instructions for standalone VFDs and VFD system with bypass; include required control wiring and connections.

.11 Ground and bond equipment as per local governing electrical code requirements and manufacturer's instructions.

.12 Provide engraved lamacoid nameplate identifying each piece of equipment. Review exact nomenclature with the Consultant.

.13 Be responsible for ensuring that VFDs, harmonic filters and connected motors are properly installed, connected, tested in proper working order and operation verified.

3.2 TESTING, START-UP, AND VERIFICATION

.1 When installation of VFDs are complete, arrange for VFD manufacturer/supplier to:

.1 supply factory authorized technician at site for minimum of 4 hours per system to examine installation and connection of each VFD, and to perform start-up and set-up procedures in conjunction with equipment start-up and testing procedures;

.2 supply factory authorized technician at site for minimum of one 8 hour day to train Owner's personnel on VFD operating and maintenance procedures;

.3 prepare and submit letter to certify that VFDs have been properly installed, tested and adjusted, and are in proper operating condition;

.4 submit list of start-up and testing parameters for uploading for future use by Owner.

.2 Start-up data entries to include motor nameplate power, speed, voltage, frequency and current.

.3 Inspect VFDs and accessories for verification of proper operation and installation.

.4 Inspect interface wiring to BAS for verification of proper operation and installation.

.5 Verification of wire terminations to VFDs and bypass and to operational circuitry.

.6 Installation verification of VFD, bypass and motor being driven for proper operation and reliability.

.7 Verification that connections and communications to BAS or other monitoring/remote control system are of proper operation and installation and of full communications compatibility.

.8 Measurement for verification of proper operation on each of following items:

.1 Motor voltage and frequency;

.2 Verification of proper motor operation;

.3 Control input for proper building automation system interface and control calibration.

.9 Calibration check for following set points (and adjustment as necessary):

.1 minimum speed;

.2 maximum speed;

.3 acceleration and deceleration rates.

.10 Verify harmonic compliance with onsite field measurements of both voltage and current harmonic distortion at point of common coupling-input terminals of harmonic mitigating equipment with and without equipment operating. Utilize recording type Fluke 41 or equivalent harmonics analyser displaying individual and total harmonic currents and voltages.

.11 Document testing and results in a report signed by a Professional Engineer licensed in the Place of Work and authorized by system manufacturer. Include for minimum 3 hard copies and electronic copy of report to be submitted to the Consultant for review.

.12 Additionally, refer to applicable installation, testing, coordination, and verification requirements in Electrical Divisions Sections.

.13 Coordinate procedures specified above to be performed by VFD manufacturer/supplier authorized technician with system commissioning work.

END OF SECTION

PART 1 - GENERAL

1.1 SECTION INCLUDES

.1 This Section specifies firestopping and smoke seal requirements that are common to mechanical work Sections of the Specification and it is a supplement to each Section and is to be read accordingly.

1.2 SUBMITTALS

.1 Submit a product data sheet and a WHIMIS sheet for each firestopping and smoke seal product.

.2 Submit for review, full company name and experience of proposed firestopping and smoke seal system applicator.

.3 Sleeve and Formed Opening Location Drawings

.1 Prepare and submit for review, drawings indicating size and location of required sleeves, recesses and formed openings in poured or precast concrete work.

.2 Such drawings are to be completely and accurately dimensioned and relate sleeve, recesses, and formed openings to suitable grid lines and elevation datum, and are to take into account structural items such as grade beams, column caps, and column drop slabs.

.3 Begin to prepare such drawings immediately upon notification of acceptance of bid and award of Contract.

1.3 CLOSEOUT SUBMITTALS

.1 Submit a letter of proper firestopping and smoke seal certification as specified in Part 3 of this Section.

1.4 QUALITY ASSURANCE

.1 Applicator is to have a minimum of 3 years of successful experience on projects of similar size and complexity, and applicator's qualifications are to be reviewed by the Consultant.

.2 Comply with firestopping and smoke seal product manufacturer’s recommendations regarding suitable environment conditions for product installation.

PART 2 - PRODUCTS

2.1 PIPE SLEEVES

.1 Galvanized Steel or Cast Iron Pipe – Schedule 40 mild galvanized steel, or Class 4000 cast iron.

2.2 FIRESTOPPING AND SMOKE SEAL MATERIALS

.1 Ensure all sealant and fire stopping is low VOC type in accordance with LEED.

.2 Asbestos-free elastomeric materials tested, listed and labelled by ULC in accordance with CAN/ULC-S115 and CAN/ULC-S101 for installation in ULC designated firestopping and smoke seal systems to provide a positive fire, water and smoke seal, and a fire-resistance rating (flame, hose stream and temperature) not less than fire resistance rating of surrounding fire rated construction.

.3 Materials are to be compatible with abutting dissimilar materials and finishes and complete with primers, damming and back-up materials, supports, and anchoring devices in accordance with firestopping manufacturer’s recommendations and ULC tested assembly.

.4 Pipe insulation forming part of a fire and smoke seal assembly is specified in Section entitled Mechanical Insulation.

.5 Manufacturers:

.1 A/D Fire Protection Systems "FIREBARRIER";

.2 Tremco Inc. Fire Protection Systems Group "TREMSTOP";

.3 3M Canada;

.4 Hilti (Canada) Ltd. Firestop Systems;

.5 Specified Technologies Inc.

2.3 WATERPROOFING SEAL MATERIALS

.1 Modular, mechanical seal assemblies consisting of interlocking synthetic rubber links shaped to continuously fill annular space between pipe and pipe sleeve or wall opening, assembled with stainless steel bolts and pressure plates and designed so when bolts are tightened the links expand to seal the opening watertight. Select seal assemblies to suit pipe size and sleeve size or wall opening size.

.2 Manufacturers:

.1 Thunderline Corp. (Power Plant Supply Co.) "LINK SEAL" Model S-316;

.2 The Metraflex Co. "MetraSeal" type ES.

2.4 PIPE ESCUTCHEON PLATES

.1 One-piece chrome plated brass or #4 finish type 302 stainless steel plates with matching screws for attachment to building surface, each plate sized to completely cover pipe sleeve or building surface opening, and to fit tightly around pipe or pipe insulation.

PART 3 - EXECUTION

3.1 INSTALLATION OF PIPE SLEEVES

.1 Where pipes pass through concrete and/or masonry surfaces provide pipe sleeves as follows:

.1 in poured concrete slabs – unless otherwise specified, minimum 16 gauge flanged galvanized steel or, where permitted by governing authorities, factory fabricated plastic sleeves;

.2 in concrete or masonry walls – Schedule 40 galvanized steel pipe or Class 4000 cast iron pipe.

.2 Sleeves in waterproofed slabs or walls are to be lengths of Schedule 40 mild galvanized steel pipe with a waterstop plate in accordance with drawing detail. Provide waterproof sleeves in following locations:

.1 in mechanical room floor slabs, except where on grade;

.2 in slabs over mechanical, fan, electrical and telephone equipment rooms or closets;

.3 in floors equipped with waterproof membranes;

.4 in roof slab;

.5 in waterproof walls.

.3 Size sleeves, unless otherwise specified, to leave 12 mm (½") clearance around pipes, or where pipe is insulated, a 12 mm (½") clearance around pipe insulation.

.4 Pack and seal void between pipe sleeves and pipe or pipe insulation in non-fire rated construction for the length of sleeves as follows:

.1 pack sleeves in interior construction with mineral wool and seal both ends of sleeves with non-hardening silicone base caulking compound;

.2 pack sleeves in exterior walls above grade with mineral wool and seal both ends of sleeves water-tight with approved non-hardening silicone base caulking compound unless mechanical type seals have been specified;

.3 seal sleeves in exterior walls below grade (and any other wall where water leakage may be a problem) with link type mechanical seals as specified.

.5 Where sleeves are required in masonry work, accurately locate and mark sleeve location, and hand sleeves to mason for installation.

.6 Terminate piping for sleeves that will be exposed so sleeve is flush at both ends with building surface so sleeve may be completely covered by an escutcheon plate, except for sleeves in waterproof floors which are to terminate 100 mm (4") above finished floor.

.7 "Gang" type sleeving will not be permitted.

.8 Where sleeves are provided in non-fire rated construction for future piping, or where piping has been removed from existing sleeves, cap and seal both ends of sleeved opening.

3.2 INSTALLATION OF WATERPROOF MECHANICAL SEALS

.1 Provide watertight link type mechanical seals in exterior wall openings.

.2 Assemble and install each mechanical seal in accordance with manufacturer's instructions.

.3 After installation, periodically check each mechanical seal installation for leakage and, if necessary, tighten link seal bolts until seal is completely watertight.

END OF SECTION

PART 1 - GENERAL

1.1 SUBMITTALS

.1 Submit shop drawings/product data sheets for:

.1 pressure gauges and thermometers;

PART 2 - PRODUCTS

2.1 PRESSURE GAUGES AND THERMOMETERS

.1 Pressure gauges as follows:

.1 adjustable, glycerine filled, 100 mm or 115 mm (4" or 4-½") diameter and each accurate to within 1% of scale range;

.2 type 304 stainless steel case with relief valve and polished stainless steel bayonet;

.3 stainless steel rotary movement with stainless steel bushings and socket;

.4 clear acrylic window;

.5 dual scale white dial with a scale range such that working pressure of system is at approximate mid-point of scale;

.6 black pointer.

.2 Pressure gauge accessories and additional requirements as follows:

.1 a bronze ball type shut-off valve is to be provided in the piping to each pressure gauge;

.2 each pressure gauge for piping and equipment with normal everyday flow is to be equipped with a brass pressure snubber;

.3 each pressure gauge for steam piping or steam equipment is to be equipped with a steel coil syphon;

.4 pressure gauges in fire protection piping must be ULC listed and labelled;

.5 pressure gauges in medical gas piping systems are to conform to CSA Z7396.1 and are to be identified with the name of the service it is provided for as well as "USE NO OIL".

.3 Thermometers as follows:

.1 round, 125 mm (5") diameter, adjustable (90°) angle bimetal dial type thermometers, each accurate to within 1% of full scale;

.2 hermetically sealed stainless steel case with stainless steel ring;

.3 dampened bimetal coil;

.4 calibration adjustment screw;

.5 white aluminum dual scale dial with black and blue markings and a range such that working temperature of system is approximate mid-point of the scale;

.6 black aluminum pointer;

.7 double strength glass window;

.8 12 mm (½") NPT connection with 6.4 mm (¼") diameter stainless steel stem;

.9 suitable thermowell.

.4 Manufacturers:

.1 H.O. Trerice Co.;

.2 Weiss Instruments;

.3 Ashcroft.

PART 3 - EXECUTION

3.1 INSTALLATION

.1 Provide pressure gauges in following locations where applicable:

.1 in valved tubing across suction, suction strainer (if applicable), and discharge piping of each circulating pump;

.2 in supply and return piping connections to main mechanical plant equipment such as boilers, chillers, heat exchangers, main coils, etc.;

.3 in expansion tank(s);

.4 in separate domestic hot water storage tank(s);

.5 at top most outlet in each standpipe fire protection system riser;

.6 in piping at each side of a pressure reducing valve;

.7 in potable water service piping downstream of meter;

.8 wherever else shown and/or specified.

.2 Provide thermometers in following locations where applicable:

.1 in supply and return piping connections to main mechanical plant equipment such as boilers, chillers, cooling towers, heat exchangers, main coils, etc., unless temperature indication is supplied with equipment;

.2 wherever else shown and/or specified.

.3 Conform to following installation requirements where applicable:

.1 for installation of thermometers in piping wells, provide a coat of metallic base heat transfer paste or grease in piping well;

.2 for pressure gauges in piping at equipment locations, install pressure gauge between equipment and first pipe fitting;

.3 locate, mount and adjust instruments so they are easily readable;

.4 where pressure gauges and/or thermometers are located at high level or in an area where they cannot be easily seen, provide remote reading instruments.

END OF SECTION

PART 1 - GENERAL

PART 2 - PRODUCTS

2.1 PIPING HANGERS AND SUPPORTS

.1 Pipe hanger and support materials, including accessories, are to be, unless otherwise specified, in accordance with Manufacturers Standardization Society (MSS) Standard Practice Manual SP-58, Pipe hangers and Supports-Materials, Design and Manufacture, and where possible, MSS designations are indicated with each product specified below. Conform to following requirements:

.1 unless otherwise specified, ferrous hanger and support products are to be electro-galvanized;

.2 hangers and supports for insulated piping are to be sized to fit around insulation and insulation jacket.

.2 Hangers and supports for horizontal suspended piping as follows:

.1 adjustable steel clevis hanger – MSS Type 1;

.2 adjustable swivel ring band hanger – MSS Type 10;

.3 adjustable roller hanger – MSS Types 41, 43, and/or 45, with MSS Type 39 steel protection saddle.

.3 Supports for horizontal pipe on vertical surfaces as follows:

.1 steel offset pipe clamp – Anvil Fig. 103 or Myatt Fig. 170;

.2 heavy-duty steel pipe clip – MSS Type 26;

.3 single steel pipe hook – Myatt Fig. 156;

.4 epoxy coated steel pipe stays are not permitted.

.4 Floor supports for vertical risers as follows:

.1 copper tubing riser clamp – MSS Type 8;

.2 heavy-duty steel riser clamp – MSS Type 8.

.5 Supports for vertical piping on vertical surfaces as follows:

.1 steel offset pipe clamp – Anvil Fig. 103 or Myatt Fig. 170;

.2 heavy-duty steel pipe bracket or soil pipe bracket – MSS Type 26;

.3 extension split pipe clamp – MSS Type 12;

.4 epoxy coated steel pipe stays are not permitted.

.6 Base support for vertical risers in excess of 6 m (20') high extending out from base mounted equipment is to consist of a base elbow support with flange.

.7 For horizontal pipe on racks, Unistrut or equal galvanized steel pipe racks with pipe securing hardware as follows:

.1 standard galvanized steel U-bolts/clamps supplied by rack manufacturer;

.2 adjustable roller chair – MSS Type 44 with MSS Type 39 steel protection saddle.

.8 Special hangers and supports for various applications as follows:

.1 vibration isolated riser supports – black steel riser clamps as specified above, complete with neoprene–steel–neoprene sandwich type vibration isolation pads between clamp and floor;

.2 for groups of pipes having same slope – MSS Type 32 welded steel brackets, Anvil Fig. 46 universal trapeze assemblies, or Unistrut or equal support assemblies, all with U-bolts, clamps, etc., to secure pipes in place;

.3 for sections of piping connected to vibration isolated equipment – hangers and supports as specified above but complete with MSS Type 48 spring cushions;

.4 for glass drain and vent piping – special padded hangers supplied by pipe supplier;

.5 for plastic piping – generally as specified above but in accordance with pipe manufacturer's recommendations;

.6 for fire protection piping – generally as above but ULC listed and/or FM approved, and in accordance with Chapter requirements of NFPA Standard applicable to piping system;

.7 for bare horizontal copper piping – generally as above but factory vinyl coated to prevent direct copper/steel contact;

.8 for bare copper vertical piping – corrosion resistant ferrous clamps with flexible rubber gasket type material (not tape) to isolate pipe from clamp;

.9 insulation protection shields to and including 40 mm (1-½") dia. – MSS Type 40 galvanized steel shields with ribs to keep shield centred on hanger.

.9 Hanger rods are to be electro-galvanized carbon steel (unless otherwise specified), round, threaded, to ASTM A36, complete with captive machine nuts with washers at hangers, sized to suit loading in accordance with Table 3 in MSS SP-58, but in any case, minimum 9.5 mm (3/8") diameter.

.10 Manufacturers:

.1 E. Myatt & Co. Inc.;

.2 Anvil International Inc.;

.3 Empire Industries Inc.;

.4 Hunt Manufacturing Ltd.;

.5 Unistrut Canada Ltd.;

.6 Nibco Inc. "Tolco";

.7 Taylor Pipe Supports.

PART 3 - EXECUTION

3.1 INSTALLATION OF FASTENING AND SECURING HARDWARE

.1 Provide fastening and securing hardware required for mechanical work to maintain installations attached to structure or to finished floors, walls, and ceilings in a secure and rigid manner capable of withstanding dead loads, live loads, superimposed dead loads, and any vibration of installed products.

.2 Use fasteners compatible with structural requirements, finishes and types of products to be connected. Do not use materials subject to electrolytic action or corrosion where conditions are liable to cause such action.

.3 Where floor, wall or ceiling construction is not suitable to support loads, provide additional framing or special fasteners to ensure proper securement to structure that is to support the products. Provide reinforcing or connecting supports where required to distribute loading to structural components.

.4 Obtain written consent before using explosive actuated fastening devices. If consent is obtained, comply with requirements of CAN/CSA Z166.1 and CAN/CSA Z166.2.

.5 Do not attach fasteners to steel deck without written consent from the Consultant.

3.2 INSTALLATION OF PIPE HANGERS AND SUPPORTS

.1 Provide required pipe hangers and supports.

.2 Provide any additional structural steel channels, angles, inserts, beam champs and similar accessories required for hanging or supporting pipe. Unless otherwise shown or specified, hang or support pipes from structure only.

.3 For insulated pipe, size hanger or support to suit diameter of insulated pipe and install hanger or support on outside of insulation and insulation finish.

.4 Unless otherwise shown or specified, hang and/or support horizontal pipe above ground by means of hangers and/or supports specified in Part 2 of this Section. Unless otherwise shown or specified, hangers for suspended pipe less than or equal to 25 mm (1") dia. are to be clevis type or adjustable ring type, and hangers for suspended pipe greater than or equal to 40 mm (1-½") dia. are to be adjustable clevis type.

.5 Space hangers and supports in accordance with following:

.1 cast iron pipe – hang or support at every joint with maximum 2.4 m (8') spacing;

.2 plastic pipe – conform to pipe manufacturer's recommended support spacing;

.3 glass pipe – conform to pipe manufacturer's recommended support spacing and support requirements;

.4 copper and steel pipe – hang or support at spacing in accordance with following schedule:

Pipe dia.	Max. Spacing Steel	Max. Spacing Copper
to 25 mm (1")	2.4 m (8')	1.8 m (6')
40 mm (1-½")	2.7 m (9')	2.4 m (8')
50 mm (2")	3.0 m (10')	2.7 m (9')
65 mm (2-½")	3.6 m (12')	3.0 m (10')
75 mm (3")	3.6 m (12')	3.0 m (10')
90 mm (3-½")	3.6 m (12')	3.6 m (12')
100 mm (4")	4.2 m (14')	3.6 m (12')
250 mm (10")	6.0 m (20')	
300 mm (12")	6.7 m (22')	

.5 flexible grooved pipe/coupling joint piping – as above but with not less than one hanger or support between joints;

.6 Where pipes change direction, either horizontally or vertically, provide a hanger or support on horizontal pipe not more than 300 mm (12") from elbow, and where pipes drop from tee branches, support tees in both directions not more than 50 mm (2") on each side of tee.

.7 When pipes with same slope are grouped and a common hanger or support is used, space hanger or support to suit spacing requirement of smallest pipe in group and secure pipes in place on common hanger or support.

.8 Provide roller hangers or supports for heat transfer piping greater than or equal to 150 mm (6") diameter and conveying a material 75°C (170°F) or greater to facilitate pipe movement due to expansion and contraction, and at each hanger or support tack weld a steel protection saddle to pipe to protect piping insulation.

.9 Unless otherwise shown or specified, support vertical piping by means of supports specified in Part 2 of this Section, spaced in accordance with following:

.1 support vertical pipes at maximum 3 m (10') intervals or at every floor, whichever is lesser;

.2 for sections of vertical piping with a length less than 3 m (10'), support pipe at least once;

.3 for vertical cast iron plain end pipe (mechanical joint type), secure riser or pipe clamp around pipe under a flange integral with pipe for vertical support purposes, or provide a length of hub and spigot pipe to facilitate proper support;

.4 for vertical steel pipe risers in excess of 3 m (10'), weld shear lugs to pipe to carry load;

.5 for vibration isolated piping risers, provide rubber-steel-rubber vibration isolation pads between riser clamps and floor.

.10 Each hanger, support or securement for horizontal bare copper tubing is to be plastic coated to prevent direct contact between pipe and ferrous hanger. Each wall or floor clamp for vertical bare copper piping is to be isolated from pipe by means of strips of flexible rubber inserts. Use of painted ferrous hangers and supports, including those painted with copper coloured paint, is not acceptable. Site application of tape or other types of isolation is not acceptable.

.11 For insulated horizontal piping less than or equal to 40 mm (1-½") diameter, provide galvanized steel insulation protection shields between insulation and hanger or support. Install shields immediately after pipe is insulated.

.12 Do not support piping from steel deck without written consent from Consultant.

3.3 EQUIPMENT BASES AND SUPPORTS

.1 Unless otherwise specified or required, set floor mounted equipment on minimum 100 mm (4") high reinforced concrete housekeeping pads 200 mm (8") clear of equipment on each side and end, or a minimum of 200 mm (8") from centreline of equipment anchor bolts to edge of the base, whichever is larger. Conform to following requirements:

.1 supply dimensioned drawings and equipment base templates, and provide anchor bolts for proper setting and securing of equipment on pads;

.2 place anchor bolts during concrete pour and be responsible for required levelling, alignment, and grouting of equipment;

.3 as a minimum, use wire mesh reinforcement, however, for pads for large heavy equipment, use reinforcement as per structural drawing details.

.2 For equipment not designed for base mounting, where required, provide welded, cleaned and prime coat painted structural steel stands or supports conforming to following requirements:

.1 provide stands and supports, except those for small equipment, designed by a structural engineer registered in jurisdiction of the work, and submit stamped and signed design drawings with calculations as shop drawings for review;

.2 flange bolt steel stands to concrete housekeeping pads;

.3 seismically restrained stands and supports in accordance with applicable requirements.

.3 Where indicated on mechanical drawings, provide welded, cleaned and prime coat painted structural steel platforms, designed by a structural engineer registered in the jurisdiction of the work, for service access to equipment. Submit stamped and signed design drawings with calculations as shop drawings for review. Conform to following requirements:

.1 platforms in accordance with OHSA requirements and adequately sized, braced, anchored, and, as required, seismically restrained;

.2 flooring equal to Fisher & Ludlow "Tru-Weld" Type 19-4, Borden type W/B (19-W-4), welded steel bar type grating;

.3 support legs constructed of welded Schedule 40 black steel pipe with welded steel cross-bracing, securely anchored and sway braced;

.4 safety guard rails, constructed from minimum 32 mm (1-¼") dia. Schedule 40 black steel pipe, for all platforms and complete with vertical stanchions at maximum 1.2 m (48") centres, top and intermediate horizontal railing, and toe plates at floor;

.5 vertical ladders constructed of Schedule 40 black steel pipe, 25 mm (1") dia. for equal height rungs, 40 mm (1-½") for stringers, anchored to floors and walls and sway braced as required;

.6 ships ladders, used wherever space conditions permit, of welded steel construction, climbing at an approximate 60º angle, and complete with channel iron stringers, open grate equal height risers approximately 165 mm (6-½") wide and factory made by grating manufacturer, handrails, and suitable anchoring and support.

3.4 CONCRETE WORK FOR MECHANICAL EQUIPMENT BASES AND PADS

.1 Concrete work required for mechanical equipment bases/pads will be provided as part of concrete work of Division 03.

.2 Exactly locate bases/pads at site and be present during concrete pour to ensure anchor bolts, inserts, plates and similar hardware are not damaged or dislodged.

.3 Coordinate base/pad installations with concrete trade and ensure bases and pads are keyed into structure to meet seismic restraint requirements where applicable.

END OF SECTION

PART 1 - GENERAL

1.1 SUBMITTALS

.1 Submit heating cable and control shop drawings/product data sheets, complete with control schematics.

1.2 CLOSEOUT SUBMITTALS

.1 Submit a start-up certification letter from cable supplier as specified in Part 3 of this section.

.2 Submit certified cable megger test reports as specified in Part 3 of this section.

PART 2 - PRODUCTS

2.1 DOMESTIC HOT WATER TEMPERATURE MAINTENANCE CABLE

.1 Raychem Canada Ltd. "HWAT-Plus", CSA approved, 120 V, 1 phase heating cable sets to maintain temperature in domestic hot water piping, each set as specified/scheduled on drawings and complete with a Raychem AMC-1B thermostat set at 45°C (115°F), and following:

.1 required lengths of "HWAT-P1" self-regulating heating cable;

.2 "RayClic-PC" power connection with end seal per circuit;

.3 "RayClic-T" tee connections with end seals as required for pipe branches;

.4 "RayClic-S" splice connections as required;

.5 GT-66 glass tape to secure cable on pipe, and "Electric Traced" adhesive labels to be secured to pipe insulation.

.6 Complete with integral ground fault protection.

.2 Manufacturers:

.1 Raychem Canada Ltd.;

.2 Dimplex/Chromalox Inc.;

.3 Tyco Thermal Controls/Pyrotenax.

2.2 PIPE FREEZE PROTECTION HEATING CABLE

.1 Raychem Canada Ltd. "XL-Trace-CR" CSA certified, self-regulating piping freeze protection cable sets as specified and/or scheduled on drawings, each set complete with:

.1 required lengths of "XL-TRACE" self-regulating heating cable;

.2 power connection with end seal per circuit;

.3 tee connections with end seals as required for pipe branches;

.4 splice connections as required;

.5 GT-66 glass tape to secure cable on pipe, and "Electric Traced" adhesive labels to be secured to pipe insulation;

.6 pipe temperature sensing thermostat.

.7 Complete with integral ground fault protection.

.8 C910-485 microprocessor-based, single-point commercial heating cable control system with integrated equipment ground-fault protection, BACnet gateway, dry contact alarm output, NEMA 4X fiber reinforced plastic enclosure, 120-277 V 30 A double pole relay.

.2 Manufacturers:

.1 Raychem Canada Ltd.;

.2 Dimplex/Chromalox Inc.;

.3 Tyco Thermal Controls/Pyrotenax.

PART 3 - EXECUTION

3.1 INSTALLATION OF DOMESTIC WATER TEMPERATURE MAINTENANCE CABLE

.1 Supply electric tracing cable sets to maintain temperature of domestic hot water piping.

.2 Hand cable sets and accessories and cable manufacturer’s installation instructions to electrical trade at site for installation on piping. Clearly identify piping to be traced. Ensure piping has been pressure tested prior to cable installation and manufacturer’s installation instructions are observed.

.3 After cable installation but before application of piping insulation, megger test and commission cable in presence of the Consultant and in accordance with cable manufacturer’s installation and operation manual. Replace any damaged or faulty cable, and when satisfactory results have been obtained, submit signed test reports to the Consultant.

.4 When traced piping has been insulated, install "Electrically Traced" labels on opposite sides of pipe at 3 m (10') intervals and in accordance with requirements specified in Section 20 05 00 – Common Work Results for Mechanical.

3.2 INSTALLATION OF FREEZE PROTECTION HEATING CABLE

.1 Supply electric tracing cable sets to prevent piping from freezing.

.2 Hand cable sets and accessories and cable manufacturer’s installation instructions to electrical trade at site for installation on piping. Clearly identify piping to be traced. Ensure piping has been pressure tested prior to cable installation and manufacturer’s installation instructions are observed.

.3 After cable installation but before application of piping insulation, megger test and commission cable in presence of the Consultant and in accordance with cable manufacturer’s installation and operation manual. Replace any damaged or faulty cable, and when satisfactory results have been obtained, submit signed test reports to the Consultant.

.4 When traced piping has been insulated, install "Electrically Traced" labels on opposite sides of pipe at 3 m (10 ft) intervals and in accordance with requirements specified in Section 20 05 00 – Common Work Results for Mechanical.

.5 When cable installations are complete, check and test operation of each cable set with heater manufacturer’s representative, make any required adjustments, and have cable manufacturer certify in writing that cable sets have been properly installed and operate as intended.

END OF SECTION

PART 1 - GENERAL

1.1 SECTION INCLUDES

.1 This Section specifies vibration isolation product requirements that are common to mechanical work Sections of the Specification and it is a supplement to each Section and is to be read accordingly.

1.2 SUBMITTALS

.1 Submit copies of manufacturer's product data sheets for products specified in this Section. Product data sheets are to include product characteristics, limitations, dimensions, finishes, and installation recommendations.

1.3 CLOSEOUT SUBMITTALS

.1 Submit a letter from vibration isolation manufacturer to certify correct installation of products, as specified in Part 3 of this Section.

PART 2 - PRODUCTS

2.1 GENERAL

.1 Vibration isolation products are to be in accordance with the most recent edition of the ASHRAE Handbook and/or as indicated on drawings, schedules, details, and as specified below.

.2 Springs are to be stable, colour coded, selected to operate at no greater than 2/3 solid load, designed in accordance with Society of Automotive Engineers Handbook Supplement 9 entitled Manual on Design and Application of Helical and Spiral Springs, and with spring diameters in accordance with manufacturer's recommendations to suit static deflection and maximum equipment load.

.3 Steel components of isolation products not exposed to the weather or moisture are to be zinc plated. Steel components of isolation products exposed to the weather or in a damp, moist environment are to be factory painted with rust inhibiting primer and 2 coats of neoprene.

.4 Where weight of isolated equipment may change significantly due to draining or filling with a liquid, vibration isolators are to be equipped with limit stops to limit spring extensions.

.5 Flexible piping connections to vibration isolated equipment are specified in the appropriate piping sections of the Specification.

2.2 ISOLATION PADS

.1 Sandwich type pads, 20 mm (¾") nominal thickness, selected for 3.2 mm (1/8") static deflection unless otherwise specified, consisting of 2 waffle type or ribbed 50 durometer neoprene pads permanently bonded to a minimum 10 gauge steel plate, and complete with rubber bushed bolt holes and equipment anchor bolts with neoprene isolation grommets.

.2 Manufacturers:

.1 Vibro-Acoustics Ltd. Type NSN;

.2 The VMC Group Vibration Mounting & Controls Inc. (Korfund-Dynamics) "SHEAR-FLEX PLATES";

.3 Kinetics Noise Control Vibron Products Group Type NGS/NGD;

.4 Mason Industries Inc. Type SW/S/SW with HG Bolt Insertion Washers;

.5 J. P. America Inc. Type JSJ.

2.3 RUBBER FLOOR ISOLATORS

.1 Captive, bridge bearing quality neoprene mount selected for a minimum 4 mm (0.15") static deflection unless otherwise specified, with an integral ductile iron housing and integral equipment anchor bolt.

.2 Manufacturers:

.1 Vibro-Acoustics Ltd. Type R;

.2 The VMC Group Vibration Mounting & Controls (Korfund-Dynamics) Type RSM;

.3 Kinetics Noise Control Vibron Products Group Type RQ;

.4 Mason Industries Inc. Type BR;

.5 J. P. America Inc. Type TRM.

2.4 SPRING FLOOR ISOLATORS

.1 Seismically rated captive spring mount isolator complete with levelling bolts, upper and lower neoprene spring cups, neoprene cushion, ductile iron housing, neoprene sound pads, and neoprene isolation grommets for securing bolts.

.2 Manufacturers:

.1 Vibro-Acoustics Ltd. Type SFS;

.2 The VMC Group Vibration Mounting & Controls (Korfund-Dynamics) Type AMSR;

.3 Kinetics Noise Control Vibron Products Group Type FLSS;

.4 Mason Industries Inc. Type SSLFH;

.5 J. P. America Inc. Type TSO-C-SC.

2.5 OPEN SPRING MOUNTS

.1 Base mount free-standing assemblies, each complete with a stable colour coded steel spring welded in place, drilled mild steel mounting plate bonded to a ribbed rubber or neoprene acoustical pad, and an external 16 mm (5/8") diameter level adjustment bolt.

.2 Manufacturers:

.1 Vibro-Acoustics Ltd. Type FS;

.2 The VMC Group Vibration Mounting & Controls (Korfund-Dynamics) "Spring-Flex" Type A;

.3 Kinetics Noise Control Vibron Products Group Type FDS;

.4 Mason Industries Inc. Type SLFH;

.5 J. P. America Inc. Type TSO.

2.6 CLOSED SPRING MOUNTS

.1 Base mount free-standing enclosed assemblies, each complete with stable colour coded spring(s), 2 piece cast housing, non-binding rubber horizontal stabilizers, a ribbed rubber or neoprene acoustical pad bonded to base of the closed housing, and an external level adjustment bolt.

.2 Manufacturers:

.1 Vibro-Acoustics Ltd. Type CM;

.2 The VMC Group Vibration Mounting & Controls (Korfund-Dynamics) "Spring-Flex" Types B and C;

.3 Kinetics Noise Control Vibron Products Group Type FLS;

.4 Mason Industries Inc. Type C;

.5 J. P. America Inc. Type TSC.

2.7 TOTALLY RETAINED SPRING MOUNTS

.1 Base mount free-standing enclosed and retained assemblies to limit both vertical and lateral movement of mounted equipment, each complete with stable colour coded spring(s), drilled welded steel housing and top plate, ribbed rubber or neoprene acoustical pad bonded to bottom of housing, vertical limit adjusting hardware, and a level adjustment bolt.

.2 Manufacturers:

.1 Vibro-Acoustics Ltd. Type CSR;

.2 The VMC Group Vibration Mounting & Controls (Korfund-Dynamics) "Spring-Flex" Type MS;

.3 Kinetics Noise Control Vibron Products Group Type SM;

.4 Mason Industries Inc. Type SLRSO;

.5 J. P. America Inc. Type TSR.

2.8 SPRING HANGERS

.1 Welded steel plate housing with top and bottom rod mounting holes and spring retainer, neoprene double deflection isolation element, stable colour coded spring, and heavy-duty rubber washers.

.2 Manufacturers:

.1 Vibro-Acoustics Ltd. Type SHR-SN;

.2 The VMC Group Vibration Mounting & Controls (Korfund-Dynamics) "Spring-Flex" Series HRSA;

.3 Kinetics Noise Control Vibron Products Group. Type SRH;

.4 Mason Industries Inc. Type 30N;

.5 J. P. America Inc. Type TSH.

2.9 NEOPRENE HANGER ISOLATORS

.1 Neoprene double deflection rod isolators with steel housing and hanger rod bushing, selected for a minimum 4 mm (0.15") static deflection unless otherwise specified.

.2 Manufacturers:

.1 Vibro-Acoustics Ltd. Type NH;

.2 The VMC Group Vibration Mounting & Controls (Korfund-Dynamics) Type HR;

.3 Kinetics Noise Control Vibron Products Group Type RH;

.4 Mason Industries Inc. Type HD or WHD;

.5 J. P. America Inc. Type TRH.

2.10 CONCRETE INERTIA TYPE EQUIPMENT BASE

.1 Welded steel bases, each complete with a structural black steel channel frame, concrete reinforcing rods, and brackets for spring mounts welded to frame.

.2 Manufacturers:

.1 Vibro-Acoustics Ltd. Type CIB;

.2 The VMC Group Vibration Mounting & Controls (Korfund-Dynamics) Type CPF;

.3 Kinetics Noise Control Vibron Products Group. Type CIB;

.4 Mason Industries Inc. Type KSL;

.5 J. P. America Inc. Type BCI.

2.11 STEEL EQUIPMENT BASE

.1 Fully welded structural steel equipment and motor support bases, each complete with a wide flange steel frame, full depth cross members, brackets for spring mounts, and adjustable motor slide rails.

.2 Manufacturers:

.1 Vibro-Acoustics Ltd. Type SB;

.2 The VMC Group Vibration Mounting & Controls (Korfund-Dynamics) Type WFB;

.3 Kinetics Noise Control Vibron Products Group Type SFB;

.4 Mason Industries Inc. Type WFSL;

.5 J. P. America Inc. Type BWS (with motor slide rail).

2.12 COMBINATION STEEL/CONCRETE INERTIA EQUIPMENT BASE

.1 Welded steel bases with a structural black steel channel frame, concrete reinforcing rods, bottom sheet steel pan, brackets for spring mounts welded to frame and adjustable motor slide rails.

.2 Manufacturers:

.1 Vibro-Acoustics Ltd. Type CIB (with motor slide rails);

.2 The VMC Group Vibration Mounting & Controls (Korfund-Dynamics) Type WPF (with motor slide rails);

.3 Kinetics Noise Control Vibron Products Group Type CIB (with motor slide rails);

.4 Mason Industries Inc. Type BMK or K;

.5 J. P. America Inc. Type BSI (with motor slide rail).

2.13 SLUNG STEEL BASE

.1 Slung steel bases of structural members with gusset plates welded to ends and complete with adjustable motor slide rails and vertical section size to suit equipment’s motor power output.

.2 Manufacturers:

.1 Vibro-Acoustics Ltd. Type SS;

.2 The VMC Group Vibration Mounting & Controls (Korfund-Dynamics) Type CPF;

.3 Kinetics Noise Control Vibron Products Group Type CIB-H;

.4 Mason Industries Inc. Type MSL.

2.14 CONTINUOUS RAIL TYPE ISOLATION FOR ROOF MOUNTED EQUIPMENT

.1 Continuous rooftop isolation shipped completely assembled, consisting of:

.1 galvanized steel sections formed to fit roof curb and associated equipment with a flexible air and weather seal joining upper and lower rail sections;

.2 stable springs, cadmium plated and selected to provide minimum deflection with 50% additional travel to solid;

.3 neoprene cushioned and wind restraints allowing 6 mm (¼") movement before engaging and resisting wind loads in any lateral direction.

.2 Manufacturers:

.1 Vibro-Acoustics Ltd. Vibro-Acoustics Type RTR;

.2 The VMC Group Vibration Mounting and Controls (Korfund-Dynamics) Type RTIR;

.3 Kinetics Noise Control Vibron Products Group Type KSR;

.4 Mason Industries Inc. Type RSC;

.5 J. P. America Inc. Type BRC.

PART 3 - EXECUTION

3.1 INSTALLATION OF VIBRATION ISOLATION MATERIALS

.1 Unless otherwise stated in the drawings, schedules and/or typical details, vibration isolation is to be provided for all mechanical equipment as per the recommendations contained within in the most recent edition of the ASHRAE Handbook.

.2 Supply to vibration isolation product manufacturer or supplier a copy of a "reviewed" shop drawing or product data sheet for each piece of equipment to be isolated and dimensioned pipe layouts of associated piping to be isolated.

.3 Unless otherwise specified, vibration isolation products are to be product of one manufacturer.

.4 Ensure vibration isolation manufacturer coordinates material selections with equipment provided in order to ensure adherence to performance criteria. Allow for expansion and contraction when material is selected and installed.

.5 Unless otherwise indicated, install isolation materials for base mounted equipment on concrete housekeeping pad bases which extend at least over the full base and isolated area of the isolated equipment. Additional requirements are as follows:

.1 block and shim bases level so ductwork and piping connections can be made to a rigid system at proper operating level, before isolated adjustment is made, and ensure there is no physical contact between isolated equipment and building structure;

.2 steel bases are to clear the sub-base by 25 mm (1");

.3 concrete bases are to clear the sub-base by 50 mm (2").

.6 Isolate piping larger than 25 mm (1") dia. directly connected to motorized and/or vibration isolated equipment with 25 mm (1") static deflection spring hangers at spacing intervals in accordance with following:

.1 for pipe less than or equal to 100 mm (4") dia. – first 3 points of support;

.2 for pipe 125 mm (5") to 200 mm (8") dia. – first 4 points of support;

.3 for pipe equal to or greater than 250 mm (10") dia. – first 6 points of support;

.7 First point of isolated piping support is to have a static deflection of twice the deflection of the isolated equipment but maximum 50 mm (2").

.8 Secure top of spring hanger frame rigidly to structure, and do not install spring hangers in concealed locations.

.9 Where it is impossible to use at least 2 spring hangers, provide Senior Flexonics Ltd. Style 102 (or 102-U as required) or equal, twin sphere, moulded rubber flexible connection assemblies, selected by manufacturer and suitable in all respects for intended application, and complete with required nipples and connections to provide proper vibration isolation.

.10 For control wiring connections to vibration isolated equipment ensure flexible metallic conduit with 90° bend is used for conduit 25 mm (1") dia. and smaller, and for conduit larger than 25 mm (1") dia., use Crouse Hinds EC couplings. Connections are to be long enough so that conduit will remain intact if equipment moves 300 mm (12") laterally from its installed position, and flexible enough to

transmit less vibration to structure than is transmitted through vibration isolation. Coordinate these requirements with mechanical trades involved. If electrical power connections are not made in a similar manner as part of the electrical work, report this fact to the Consultant.

.11 Arrange and pay for vibration isolation product manufacturer to visit site to inspect installation of his equipment. Perform revision work required as a result of improper installation. When vibration isolation equipment manufacturer is satisfied with the installation, obtain and submit a letter stating manufacturer has inspected the installation and equipment is properly installed.

END OF SECTION

PART 1 - GENERAL

1.1 SECTION INCLUDES

.1 Nameplates.

.2 Tags.

.3 Pipe Markers.

1.2 REFERENCES

.1 ASME A13.1 – Scheme for the Identification of Piping Systems.

1.3 SUBMITTALS

.1 Section 01 33 00: Submittals.

.2 Submit list of wording, symbols, letter size, and colour coding for mechanical identification.

.3 Submit valve chart and schedule, including valve tag number, location, function, and valve manufacturer's name and model number.

.4 Product Data: Provide manufacturers catalogue literature for each product required.

.5 Manufacturer's Installation Instructions: Indicate special procedures, and installation.

1.4 CLOSEOUT SUBMITTALS

.1 Section 01 77 00: Project Closeout.

.2 Record actual locations of tagged valves.

PART 2 - PRODUCTS

2.1 MECHANICAL WORK IDENTIFICATION MATERIALS

.1 Confirm with the Owner if an existing mechanical work identification system is in place and, if so, match accordingly.

.2 If an existing mechanical work identification system is not in place, the following is to be used:

.1 Equipment nameplates are to be minimum 1.6 mm (1/16") thick 2-ply laminated coloured plastic plates, minimum 12 mm x 50 mm (½" x 2") for smaller items such as damper motors and control valves, minimum 25 mm x 65 mm (1" x 2-½") for equipment, and minimum 50 mm x 100 mm (2" x 4") for control panels and similar items. Additional requirements are as follows:

.1 unless otherwise specified or required, each nameplate is to be white, complete with bevelled edges and black engraved wording to completely identify equipment and its use with no abbreviations;

.2 wording is generally to be as per drawings, i.e. Fan EF-1, and is to include equipment service and building area/zone served, but must be reviewed prior to engraving;

.3 supply stainless steel screws for securing nameplates in place;

.4 nameplates for equipment suspended above floor level or generally not within easy viewing from floor level are to be increased in size so as to be easily readable from floor level.

.2 Valve tags are to be coloured, 40 mm (1-½") square, 2-ply laminated plastic with bevelled edges, red-white, green-white, yellow-black, etc., to match piping identification colour, each

complete with a 3.2 mm (1/8") diameter by 100 mm (4") long brass plated steel bead chain, and four lines of engraved maximum size identification wording, i.e.:

VALVE V12
200 mm (8")
CHILL. WATER
NORMALLY
OPEN

.3 Standard pipe identification is to be equal to Smillie McAdams Summerlin Ltd., Brady or Primark Manufacturing Inc. vinyl plastic with indoor/outdoor type vinyl ink lettering and directional arrows, as follows:

.1 for pipe less than or equal to 150 mm (6") diameter, coiled type snap-on markers of a length to wrap completely around pipe or pipe insulation;

.2 for pipe larger than 150 mm (6") diameter, saddle type strap-on markers with 2 opposite identification locations and complete with nylon cable ties.

.4 Identification wording and colours for pipe identification materials are to be as follows:

Pipe Service	Identification Colour	Legend
domestic cold water	green	DOM. COLD WATER
domestic hot water supply	green	DOM. HW SUPPLY
domestic hot water recirculation	green	DOM. HW RECIRC.
tempered domestic water	green	TEMP. DOM. WATER
chilled drinking water	green	CH. DRINK WTR.
storm drainage	green	STORM
sanitary drainage	green	SAN.
plumbing vent	green	SAN. VENT
acid sanitary drainage	yellow	ACID DRAIN
acid drainage vent	yellow	ACID VENT
fire protection standpipe	red	F.P. STANDPIPE
fire protection sprinklers	red	F.P. SPRINKLER
natural gas	to Code	to Code, c/w pressure
natural gas vent	to Code	to Code
propane gas	to Code	to Code, c/w pressure
propane gas vent	to Code	to Code
fuel oil supply	yellow	FUEL OIL SUPPLY
fuel oil return	yellow	FUEL OIL RETURN
fuel oil vent	yellow	FUEL OIL VENT
heating water supply	yellow	HTG. WTR. SUPPLY
heating water return	yellow	HTG. WTR. RETURN
heating water drain	yellow	HTG. WTR. DRAIN

Pipe Service	Identification Colour	Legend
glycol heating supply	yellow	GLY. HTG. SUPPLY
glycol heating return	yellow	GLY. HTG. RETURN
glycol heating drain	yellow	GLY. HTG. DRAIN
glycol heat reclaim return	yellow	GLY. HTG. RECLAIM R.
glycol heat reclaim supply	yellow	GLY. HTG. RECLAIM S.
heat pump geothermal loop – source side supply	green	GEO. LOOP SOURCE SUPPLY
heat pump geothermal loop – source side return	green	GEO. LOOP SOURCE RETURN
heat pump geothermal loop – load side supply	green	GEO. LOOP LOAD SUPPLY
Heat pump geothermal loop – load side return	green	GEO. LOOP LOAD RETURN
condenser water supply	green	COND. WTR. SUPPLY
condenser water return	green	COND. WTR. RETURN
chilled water supply	green	CH. WTR. SUPPLY
chilled water return	green	CH. WTR. RETURN
chilled water drain	green	CH. WTR. DRAIN
low pressure steam	yellow	….kPa STEAM
medium pressure steam	yellow	….kPa STEAM
high pressure steam	yellow	….kPa STEAM
low pressure condensate	yellow	L.P. CONDENSATE
medium pressure condensate	yellow	M.P. CONDENSATE
high pressure condensate	yellow	H.P. CONDENSATE
pumped condensate	yellow	PUMPED CONDENSATE
steam vent	yellow	STEAM VENT
boiler feedwater	yellow	BLR. FEEDWATER
boiler blowdown	yellow	BLR. BLOW-OFF
refrigerant suction	yellow	REFRIG. SUCTION
refrigerant liquid	yellow	REFRIG. LIQUID
refrigerant hot gas	yellow	REFRIG. HOT GAS
diesel engine exhaust	yellow	ENGINE EXHAUST
gasoline	yellow	GASOLINE
distilled water	green	DISTILL. WATER
demineralized water	green	DEMIN. WATER

Pipe Service	Identification Colour	Legend
compressed air (< 700 kPa)	green	….kPa COMP. AIR
compressed air (>700 kPa)	yellow	….kPa COMP. AIR
control air	green	CONTROL AIR

.5 Colours for pipe identification legends and directional arrows are to be as follows:

Identification Colour	Legend and Arrow Colour
yellow	black
green	white
red	white

.6 Medical gas piping identification materials and requirements are specified in Section 22 63 00 - Gas Systems for Laboratory and Healthcare Facilities.

.7 Duct identification is to be custom made Mylar stencils with 50 mm (2") high lettering to accurately describe duct service, i.e. "AHU-1 SUPPLY", complete with a directional arrow, and coloured ink with ink pads and roller applicators. Ink colour is generally to be black but must contrast with lettering background.

PART 3 - EXECUTION

3.1 PREPARATION

.1 Degrease and clean surfaces to receive adhesive for identification materials.

3.2 INSTALLATION

.1 Identify new exposed piping and ductwork as per Part 2 of this Section in locations as follows:

.1 at every end of every piping or duct run;

.2 adjacent to each valve, strainer, damper and similar accessory;

.3 at each piece of connecting equipment;

.4 on both sides of every pipe and duct passing through a floor, wall or partition, unless otherwise specified;

.5 at 6 m (20') intervals on pipe and duct runs exceeding 6 m (20') in length;

.6 at least once in each room, and at least once on pipe and duct runs less than 6 m (20') in length.

.2 Unless otherwise specified identify new concealed piping and ductwork as per Part 2 of this Section in locations as follows:

.1 at points where pipes or ducts enter and leave rooms, shafts, pipe chases, furred spaces, and similar areas;

.2 at maximum 6 m (20') intervals on piping and ductwork above suspended accessible ceilings, and at least once in each room;

.3 at each access door location;

.4 at each piece of connected equipment, automatic valve, etc.

.3 Provide an identification nameplate for equipment provided as part of this project, including items such as control valves, motorized dampers, instruments, and similar products. Secure nameplates in place, approximately at eye level if possible, with stainless steel screws unless such a practice is

prohibitive, in which case use epoxy cement applied to cleaned surfaces. Locate nameplates in the most conspicuous and readable location.

.4 Paint new natural and/or propane gas piping with primer and 2 coats of yellow paint in accordance with Code requirements. Identify piping at intervals as specified above.

.5 Provide an identification nameplate for each motor starter or disconnect switch located in a motor control centre or on a motor starter panel, and on each individually mounted starter provided as part of mechanical work, and on each disconnect switch provided as part of the electrical work for motorized equipment provided as part of mechanical work.

.6 For electrically traced mechanical work, identification wording is to include "ELECTRICALLY TRACED".

.7 Tag valves and prepare a valve tag chart in accordance with following requirements:

.1 attach a valve tag to each new valve, except for valves located immediately at equipment they control;

.2 prepare a digital valve tag chart to list tagged valves, with, for each valve, the tag number, location, valve size, piping service, and valve attitude (normally open or normally closed);

.3 if an existing valve tag chart is available at site, valve tag numbering is to be an extension of existing numbering and new valve tag chart is to incorporate existing chart;

.4 include a copy of valve tag chart in each copy of operating and maintenance instruction manuals.

.8 Where shut-off valves, control dampers, sensors, and similar items which will or may need maintenance and/or repair are located above accessible suspended ceilings, provide round coloured ceiling tacks in ceiling panel material, or stickers equal to Brady "Quick Dot" on ceiling grid material to indicate locations of items. Unless otherwise specified, ceiling tack or sticker colours are to be as follows:

.1 HVAC piping valves and equipment: yellow

.2 fire protection valves and equipment: red

.3 plumbing valves and equipment: green

.4 HVAC ductwork dampers and equipment: blue

.5 control system hardware and equipment: orange

END OF SECTION

PART 1 - GENERAL

1.1 SECTION INCLUDES

.1 This Section specifies mechanical system testing, adjusting, and balancing requirements that are common to mechanical work Sections of the Specification and it is a supplement to each Section and is to be read accordingly.

1.2 DEFINITIONS

.1 “Agency” – means agency to perform testing, adjusting and balancing work.

.2 “TAB” – means testing, adjusting, and balancing to determine and confirm quantitative performance of equipment and systems and to regulate specified fluid flow rate and air patterns at terminal equipment, e.g., reduce fan speed, throttling, etc.

.3 “hydronic systems” – includes heating water, chilled water, glycol-water solution, condenser water, and any similar system.

.4 “air systems” – includes outside air, supply air, return air, exhaust air, and relief air systems.

.5 “flow rate tolerance” – means allowable percentage variation, minus to plus, of actual flow rate values in Contract Documents.

.6 “report forms” – means test data sheets arranged for collecting test data in logical order for submission and review, and these forms, when reviewed and accepted, should also form permanent record to be used as basis for required future testing, adjusting and balancing.

.7 “terminal” – means point where controlled fluid enters or leaves the distribution system, and these are supply inlets on water terminals, supply outlets on air terminals, return outlets on water terminals, and exhaust or return inlets on air terminals such as registers, grilles, diffusers, louvers, and hoods.

.8 “main” – means duct or pipe containing system’s major or entire fluid flow.

.9 “submain” – means duct or pipe containing part of the systems’ capacity and serving 2 or more branch mains.

.10 “branch main” – means duct or pipe servicing 2 or more terminals.

.11 “branch” – means duct or pipe serving a single terminal.

1.3 SUBMITTALS

.1 Within 30 days of work commencing at site, submit name and qualifications of proposed testing and balancing agency in accordance with requirements of article entitled Quality Assurance below.

.2 Submit sample test forms, if other than those standard forms prepared by Associated Air Balance Council (AABC) or National Environmental Balancing Bureau (NEBB), are proposed for use.

.3 Submit a report by Agency to indicate Agency’s evaluation of mechanical drawings with respect to service routing and location or lack of balancing devices. Include set of drawings used and marked-up by Agency to prepare report.

1.4 CLOSEOUT SUBMITTALS

.1 Submit a report by Agency after each site visit made by Agency during construction phase of this Project.

.2 Submit a draft report, as specified in Part 3 of this Section.

.3 Submit a final report, as specified in Part 3 of this Section.

.4 Submit a testing and balancing warranty as specified in Part 3 of this Section.

.5 Submit reports listing observations and results of post construction site visits as specified in Part 3 of this Section.

1.5 QUALITY ASSURANCE

.1 Approved contractors for testing adjusting, and balancing:

.1 CS Balancing – Trevor Kelly - trevork@csbalancing.com - 705.760.0390

.2 Flowdirection TAB Services Inc. - Mamoon Alswaiti - mamoons@flowdirection.ca – 647-629-0605.

PART 2 - PRODUCTS – NOT USED

PART 3 - EXECUTION

3.1 SCOPE OF WORK

.1 Perform total mechanical systems testing, adjusting, and balancing. Requirements include measurement and establishment of fluid quantities of mechanical systems as required to meet design specifications and comfort conditions, and recording and reporting results.

.2 Mechanical systems to be tested, adjusted and balanced include:

.1 TAB of medical gas systems is not part of TAB work and is specified in Section entitled Medical Gas Piping Systems.

.2 TAB of heating systems is to include piping and equipment fluid temperatures, flows and control, and if TAB is not done during heating season, a follow-up site visit during heating season will be required to confirm proper flows and temperatures, and any required system "fine tuning".

.3 TAB of cooling systems is also to include piping and equipment fluid temperatures, flows and control, and if TAB is not done during cooling season, a follow-up site visit during cooling season will be required to confirm proper flows and temperatures, and any required system "fine tuning”.

.4 TAB of air handling systems is to include equipment and ductwork air temperatures, capacities and flows.

.5 Leakage testing of duct work and air handling units where indicated in those respective specification sections

3.2 TESTING, ADJUSTING, AND BALANCING

.1 Conform to following:

.1 as soon as possible after award of Contract, Agency is to carefully examine a set of mechanical drawings with respect to routing of services and location of balancing devices, and is to issue a report listing results of the evaluation;

.2 set of drawings examined by Agency is to be returned with evaluation report, with red line mark-ups to indicate locations for duct system test plugs, and required revision work such as relocation of balancing devices and locations for additional devices;

.3 after review of mechanical work drawings and specification, Agency is to visit site at frequent, regular intervals during construction of mechanical systems, to observe routing of services,

locations of testing and balancing devices, workmanship, and anything else that will affect testing, adjusting and balancing;

.4 after each site visit, Agency is to report results of site visit indicating date and time of visit, and detailed recommendations for any corrective work required to ensure proper adjusting and balancing;

.5 testing, adjusting and balancing is not to begin until:

.1 building construction work is substantially complete and doors have been installed;

.2 mechanical systems are complete in all respects, and have been checked, started, adjusted, and then successfully performance tested.

.6 mechanical systems to be tested, adjusted and balanced are to be maintained in full, normal operation during each day of testing, adjusting and balancing;

.7 obtain copies of reviewed shop drawings of applicable mechanical plant equipment and terminals, and temperature control diagrams and sequences;

.8 Agency is to walk each system from system "head end" equipment to terminal units to determine variations of installation from design, and system installation trades will accompany Agency;

.9 Agency is to check valves and dampers for correct and locked position, and temperature control systems for completeness of installation before starting equipment;

.10 wherever possible, Agency is to lock balancing devices in place at proper setting, and permanently mark settings on devices;

.11 Agency is to leak test ductwork as specified in Section entitled HVAC Air Distribution in accordance with requirements of SMACNA "HVAC Air Duct Leak Test Manual", coordinate work with work of aforementioned Sections, provide detailed sketch(es) to Sheet Metal Contractor and Consultant identifying ductwork not in accordance with acceptable leakage values specified in aforementioned Sections, and retest corrected ductwork;

.12 Agency is to balance systems with due regard to objectionable noise which is to be a factor when adjusting fan speeds and performing terminal work such as adjusting air quantities, and should objectionable noise occur at design conditions, Agency is to immediately report problem and submit data, including sound readings, to permit an accurate assessment of noise problem to be made;

.13 Agency is to check supply air handling system mixing plenums for stratification, and where variation of mixed air temperature across coils is found to be in excess of ±5% of design requirements, Agency is to report problem and issue a detail sketch of plenum baffle(s) required to eliminate stratification;

.14 Agency is to perform testing, adjusting and balancing to within ±5% of design values, and make and record measurements which are within ±2% of actual values;

.15 for air handling systems equipped with air filters, test and balance systems with simulated 50% loaded (dirty) filters by providing a false pressure drop;

.16 test, adjust and balance air conditioning systems during summer season and heating systems during winter season, including at least a period of operation at outside conditions within 2.8°C (5°F) wet bulb temperature of maximum summer design condition, and within 5.5°C (10°C) dry bulb temperature of minimum winter design condition, and take final temperature readings during seasonal operation.

.2 Prepare reports as indicated below.

.1 Upon completion of testing, adjusting, and balancing procedures, prepare draft reports on AABC or NEBB forms. Draft reports may be hand written, but must be complete, factual, accurate, and legible. Organize and format draft reports in same manner specified for final reports and submit for review.

.2 Upon verification and approval of draft reports, prepare final reports organized and formatted as specified below. Use units of measurement (SI or Imperial) as used on Project Documents.

.3 Report forms are to be those standard forms prepared by the referenced standard for each respective item and system to be tested, adjusted, and balanced. Report forms complete with schematic systems diagrams and other data are to be consolidated in electronic format as a PDF. PDF file to be indexed and organized into sections, as it applies to the project, as follows:

.1 General Information and Summary;

.2 Air Systems;

.3 Hydronic Systems;

.4 Temperature Control Systems;

.5 Special Systems.

.4 Agency is to provide following minimum information, forms and data in report:

.1 inside cover sheet to identify Agency, Contractor, and Project, including addresses, and contact names and telephone numbers and a listing of instrumentation used for procedures along with proof of calibration;

.2 remainder of report is to contain appropriate forms containing as a minimum, information indicated on standard AABC or NEBB report forms prepared for each respective item and system;

.3 Agency is to include for each system to be tested, adjusted and balanced, a neatly drawn, identified (system designation, plant equipment location, and area served) schematic "as-built" diagram indicating and identifying equipment, terminals, and accessories;

.4 Agency is to include report sheets indicating building comfort test readings for all rooms.

.3 After final testing and balancing report has been submitted, Agency is to visit site with Contractor and Consultant to spot check results indicated on balancing report. Agency is to supply labour, ladders, and instruments to complete spot checks. If results of spot checks do not, on a consistent basis, agree with final report, spot check procedures will stop and Agency is to then rebalance systems involved, resubmit final report, and again perform spot checks with Contractor and Consultant.

.4 When final report has been accepted, Contractor is to submit to Owner, in name of Owner, a certificate equal to AABC National Guaranty Certification or a NEBB Quality Assurance Program Bond, and in addition, Contractor is to submit a written extended warranty from Agency covering one full heating season and one full cooling season, during which time any balancing problems which occur, with exception of minor revision work done during scheduled site visits, will, at no cost, be investigated by Agency and reported on to Owner, and if it is determined that problems are a result of improper testing, adjusting and balancing, they are to be immediately corrected without additional cost to Owner.

END OF SECTION

PART 1 - GENERAL

1.1 SECTION INCLUDES

.1 This Section specifies insulation requirements common to Mechanical Divisions work Sections and it is a supplement to each Section and is to be read accordingly.

1.2 DEFINITIONS

.1 "concealed" – means mechanical services and equipment above suspended ceilings, in non-accessible chases, in accessible pipe spaces, and furred-in spaces.

.2 "exposed" – means exposed to normal view during normal conditions and operations.

.3 "mineral fibre" – includes glass fibre, rock wool, and slag wool.

.4 "domestic water" or "potable water" – means piping extended from building Municipal supply main.

1.3 SUBMITTALS

.1 Submit a product data sheet for each insulation system product.

.2 Submit a fabrication drawing for each custom made cover to indicate material and fabrication details, and a 300 mm (12") square sample of proposed cover material.

.3 Submit a colour chart for coloured lagging adhesive for canvas jacketed insulation.

1.4 CLOSEOUT SUBMITTALS

.1 In accordance with Part 3 of this Section, submit a letter from fire rated duct wrap supplier to certifying duct wrap has been properly installed.

1.5 QUALITY ASSURANCE

.1 Mechanical insulation is to be applied by a licensed journeyman insulation mechanic, or by an apprentice under direct, daily, on-site supervision of a journeyman mechanic.

.2 Do not apply insulation unless leakage tests have been satisfactorily completed.

.3 Ensure surfaces to be insulated are clean and dry.

.4 Ensure ambient temperature is minimum 13°C (55°F) for at least 1 day prior to application of insulation, and for duration of insulation work, and relative humidity is and will be at a level such that mildew will not form on insulation materials.

.5 Insulation materials must be stored on site in a proper and dry storage area. Any wet insulation material is to be removed from site.

PART 2 - PRODUCTS

2.1 FIRE HAZARD RATINGS

.1 Unless otherwise specified, insulation system materials inside building must have a fire hazard rating of not more than 25 for flame spread and 50 for smoke developed when tested in accordance with CAN/ULC-S102, Surface Burning Characteristics of Building Materials and Assemblies.

2.2 THERMAL PERFORMANCE

.1 Unless otherwise specified, thermal performance of insulation is to meet or exceed values given in Tables entitled Minimum Piping Insulation Thickness Heating and Hot Water Systems and Minimum

Piping Insulation Thickness Cooling Systems, as stated in ANSI/ASHRAE/IES Standard 90.1 version referenced in Ontario Building Code.

2.3 PIPE INSULATION MATERIALS

.1 Horizontal pipe insulation at hangers and supports are to be equal to Belform Insulation Ltd. "Koolphen K-Block" insulated pipe support inserts consisting of minimum 150 mm (6") long, pre-moulded, rigid, sectional phenolic foam insulation (of same thickness as adjoining insulation) with a reinforced foil and kraft paper vapour barrier jacket and a captive galvanized steel saddle.

.2 Flexible foam elastomeric is to be closed cell, sleeve type, longitudinally split self-seal, foamed plastic pipe insulation with a water vapour transmission rating of 0.10 in accordance with ASTM E96, Procedure B, and required installation accessories.

.1 Manufacturers:

.1 Armacell AP/Armaflex SS;

.2 IK Insulation Group K-Flex "LS" Self-Seal Pipe Insulation.

.3 Flexible foam elastomeric is to be closed cell, sleeve type, longitudinally split self-seal, foamed plastic pipe insulation with a water vapour transmission rating of 0.10 in accordance with ASTM E96, Procedure B, and required installation accessories.

.1 Manufacturers:

.1 Armacell AP/Armaflex SS;

.4 Premoulded mineral wool is to be rigid, sectional, sleeve type, non-combustible, longitudinally split mineral wool, or basalt pipe insulation with a reinforced vapour barrier jacket.

.1 Manufacturers:

.1 Roxul "Techton 1200";

.2 IIG (Johns Manville Inc.) MinWool-1200;

.3 Paroc 1200.

.5 Fire rated pre-moulded mineral wool is to be non-combustible, fire-rated, rigid, sectional, longitudinally split mineral wool or basalt pipe insulation with a reinforced vapour barrier jacket and compatible with CAN/ULC-S115 and CAN/ULC-S101 firestopping.

.1 Manufacturers:

.1 Roxul "Techton 1200";

.2 IIG (Johns Manville Inc.) MinWool-1200;

.3 Paroc 1200.

.6 Pre-moulded mineral fibre is to be rigid, sectional, sleeve type insulation to ASTM C547, with a factory applied vapour barrier jacket.

.1 Manufacturers:

.1 Johns Manville Inc. "Micro-Lok AP-T Plus";

.2 Knauf Fiber Glass "Pipe Insulation" with "ASJ-SSL" jacket;

.3 Manson Insulation Inc. "ALLEY K APT";

.4 Owens Corning “Fiberglas” Pipe Insulation.

.7 Blanket mineral fibre is to be blanket type roll insulation to CGSB 51-GP-11M, 24 kg/m3 (1-½ lb/ft^3) density, with a factory applied vapour barrier facing.

.1 Manufacturers:

.1 Johns Manville Inc. Microlite FSK Duct Wrap Type 150;

.2 Knauf Fiber Glass Blanket Insulation FSK Duct Wrap Type III;

.3 Manson Insulation Inc. ALLEY WRAP FSK Duct Wrap Type III;

.4 Certainteed Corporation Softtouch FSK Duct Wrap Type 150.

2.4 EQUIPMENT INSULATION MATERIALS

.1 Blanket mineral fibre is to be blanket type roll form insulation to ASTM C553, 24 kg/m3 (1-½ lb/ft³) density, with a factory applied vapour barrier facing.

.1 Manufacturers:

.1 Johns Manville Inc. Microlite FSK Duct Wrap Type 150;

.2 Knauf Fiber Glass Blanket Insulation FSK Duct Wrap Type III;

.3 Manson Insulation Inc. ALLEY WRAP FSK Duct Wrap Type III;

.4 Certainteed Corporation Softtouch FSK Duct Wrap Type 150.

.2 Semi-rigid mineral fibre board is to be roll form, moulded insulation to ASTM C1393, with a factory applied vapour barrier facing consisting of laminated aluminum foil and kraft paper.

.1 Manufacturers:

.1 Knauf Fiber Glass Pipe and Tank Insulation;

.2 Manson Insulation Inc. "AK FLEX";

.3 Johns Manville Inc. Pipe and Tank Insulation “Micro-Flex”;

.4 Multi-Glass Insulation Ltd. "MULTI-FLEX MF";

.5 Owens Corning Pipe and Tank Insulation;

.6 Glass-Cell Fabricators Ltd. "R-Flex".

.3 Closed cell foamed glass is to be Owens Corning "FOAMGLAS" expanded, rigid board and block type insulation with a liquid or vapour permeability rating (as per ASTM C240) of 0.00.

2.5 REMOVABLE/REUSABLE INSULATION COVERS

.1 Valve, etc. covers are to be NO SWEAT reusable insulation wraps with vapour barrier jacket and self-sealing ends and longitudinal seam, with a length to suit the application and an insulation thickness equal to adjoining insulation.

.2 Custom manufactured equipment covers conforming to shape of item to be insulated, designed to be easily removable and replaceable to suit use and maintenance procedures of particular item, and to provide adequate personnel protection. Covers are to be complete with minimum 95 kg/m3 (6 lb/ft³) density ceramic fibre insulation sewn between minimum 542.5 g/m2 (1.8 oz/ft²) weight silicone impregnated fibreglass fabric in a quilted pattern using double stitches made with Kelvar or Teflon coated fibreglass thread. Overlap flaps are to be secured using laces, snaps, or Velcro double stitched in place.

.3 Manufacturers:

.1 Crossby Dewar Inc.;

.2 Insufab Systems Inc.;

.3 ADL Insulflex Inc.;

.4 Firwin Corp.;

.5 GlassCell Isofab Inc.

2.6 DUCTWORK SYSTEM INSULATION MATERIALS

.1 Rigid mineral fibre board is to be pre-formed board type insulation to ASTM C612, 48 kg/m3 (3 lb/ft³) density, with a factory applied reinforced aluminum foil and kraft paper facing.

.1 Manufacturers:

.1 Knauf Fiber Glass Insulation Board with FSK facing;

.2 Manson Insulation Inc. "AK BOARD FSK";

.3 Johns Manville Inc. Type 814 "Spin-Glas";

.4 Owens Corning 703.

.2 Semi-rigid mineral fibre board is to be roll form insulation to ASTM C1393, consisting of cut strips of rigid mineral board insulation glued to an aluminium foil and kraft paper facing.

.1 Manufacturers:

.1 Multi-Glass Insulation Ltd. "Multi-Flex MKF";

.2 Glass-Cell Fabricators Ltd. "R-FLEX";

.3 Owens Corning Pipe and Tank Insulation;

.4 Johns Manville Inc. Pipe and Tank Insulation.

.3 Blanket mineral fibre is to be blanket type roll form insulation to ASTM C553, 24 kg/m3 (1-½ lb/ft3) density, 40 mm (1-½") thick, with a factory applied vapour barrier facing.

.1 Manufacturers:

.1 Johns Manville Inc. Microlite FSK Duct Wrap Type 150;

.2 Knauf Fiber Glass Blanket Insulation FSK Duct Wrap Type III;

.3 Manson Insulation Inc. ALLEY WRAP FSK Duct Wrap Type III;

.4 Certainteed Corporation Softtouch FSK Duct Wrap Type 150.

.4 Flexible foam elastomeric sheet is to be sheet form, CFC free, closed cell, self-adhering elastomeric nitrile rubber insulation with a water vapour permeability rating of 0.08 in accordance with ASTM E96 Procedure A.

.1 Manufacturers:

.1 Armacell "AP/Armaflex SA";

.2 IK Insulation Group "K-Flex Duct Wrap", S2S.

.5 Extruded polystyrene tapered insulation – equal to Soprema Sopra-ISO Tapered, closed cell polyisocyanurate foam core with organic facers reinforced with glass fibres, 172 kPa compressive strength as per ASTM D1621, 32 kg/m3 density, 50 mm minimum thickness, 2% slope. Thickness shall increase if width of duct work is larger than 1200 mm to maintain 2% slope.

2.7 FIRE RATED DUCT WRAP

.1 Flexible, non-combustible, blanket type mineral fibre duct wrap completely encapsulated in reinforced foil, suitable for installation with zero clearance to combustibles (for grease ducts), and ULC tested and listed (ULC Designs FRD-17 & 23 for ventilation ducts, ULC Design FRD-19 for kitchen exhaust/grease duct) to facilitate a 2 hour fire resistance rating (76 mm (3") thick) to kitchen grease exhaust duct in accordance with requirements of NFPA 96, and/or a 1 hour or 2 hour fire

resistance rating (38 mm (1-½") thick) to ventilation or pressurization ductwork in accordance with requirements of ISO 6944.

.2 Manufacturers:

.1 3M Fire Barrier Duct Wrap 615;

.2 CL4 Inc. "CL4Fire";

.3 Unifrax Corp. "FyreWrap Elite 1.5";

.4 Morgan Thermal Ceramics "FireMaster FastWrap XL".

2.8 INSULATING COATINGS

.1 Equal to Robson Thermal Manufacturing Ltd. insulating coatings as follows:

.1 anti-condensation coating, "No Sweat-FX";

.2 thermal insulating coating, "ThermaLite".

2.9 INSULATION FASTENINGS

.1 Wire – minimum 15 gauge galvanized annealed wire.

.2 Wire with Mesh – minimum 15 gauge galvanized annealed wire factory woven into 25 mm (1") hexagonal mesh.

.3 Aluminium Banding – equal to ITW Insulation Systems Canada "FABSTRAPS" minimum 12 mm (½") wide, 0.6 mm (1/16") thick aluminium strapping.

.4 Stainless Steel Banding – equal to ITW Insulation Systems Canada "FABSTAPS" 0.6 mm (1/16") thick, minimum 12 mm (½") wide type 304 stainless steel strapping.

.5 Duct Insulation Fasteners – weld-on 2 mm (3/32") diameter zinc coated steel spindles of suitable length, complete with minimum 40 mm (1-½") square plastic or zinc plated steel self-locking washers.

.6 Tape Sealant – equal to MACtac Canada Ltd. self-adhesive insulation tapes, types PAF, FSK, ASJ, or SWV as required to match surface being sealed.

.7 Mineral Fibre Insulation Adhesive – clear, pressure sensitive, brush consistency adhesive, suitable for a temperature range of -20°C to 82°C (-4°F to 180°F), compatible with type of material to be secured, and WHMIS classified as non-hazardous.

.8 Flexible Elastomeric Insulation Adhesive – Armacell "Armaflex" #520 air-drying contact adhesive.

.9 Closed Cell Foamed Glass Insulation Adhesive – Pittsburgh Corning PC88 multi-purpose 2-component adhesive.

.10 Lagging Adhesive – white, brush consistency, ULC listed and labelled, 25/50 fire/smoke rated lagging adhesive for canvas jacket fabric, suitable for colour tinting, complete with fungicide and washable when dry.

.11 Screws – No. 10 stainless steel sheet metal screws.

2.10 INSULATION JACKETS AND FINISHES

.1 Canvas Jacket Material – ULC listed and labelled, 25/50 fire/smoke rated, roll form, minimum 170 g (6 oz).

.2 Roll Form Sheet and Fitting Covers – minimum 15 mm (1/2") thick white PVC, 25/50 fire/smoke rated tested in accordance with CAN/ULC-S102, complete with installation and sealing accessories.

.1 Manufacturers:

.1 Proto Corp. "LoSMOKE";

.2 The Sure-Fit System "SMOKE-LESS 25/50";

.3 Johns Manville Inc. "Zeston" 300.

.3 Rigid Aluminium Jacket – equal to ITW Insulation Systems Canada "Lock-on" 0.406 mm (0.016") thick embossed aluminum jacket material to ASTM B209, factory cut to size and complete with polysurlyn moisture barrier and continuous modified Pittsburgh Z-Lock, butt straps with "Fabstraps" to weatherproof the end to end joints, and 2-piece epoxy coated pressed aluminum fittings with weather locking edges.

.4 Stainless Steel Jacket – equal to ITW Insulation Systems Canada "Lock-on" 0.254 mm (0.010") thick type 304 embossed stainless steel jacket material to ASTM A240, factory cut to size and complete with moisture barrier and continuous modified Pittsburgh Z-Lock, butt straps with "Fabstraps" to cover end to end joints, and 2-piece pressed stainless steel fittings with weather locking edges.

.5 Adhesive backed flexible aluminium is to be MFM Building Products Corp. "Flex-Clad 400" roll form sheet material with an aggressive rubberized asphalt adhesive backing, high density polyethylene reinforcement, and an embossed aluminum facing.

.6 Heat resistant, trowel consistency thermal insulating and finishing cement to CAN/CGSB 51.12, and suitable for the application.

.7 Foamed glass insulation protective coating is to be Pittsburgh Corning "PITTCOTE 300e" flexible acrylic latex weather barrier coating, white unless otherwise specified.

.8 UV and moisture resistant flexible foam insulation with protective jacket equal to Armacell “ArmaFlex Shield".

.9 Self adhesive multilayer jacketing - equal to 3M Ventureclad 1577CW. Multi-ply laminate flexible jacketing, acrylic adhesive, zero permeability vapor barrier, 480 N/mm tensile strength, 22N/25 mm peel adhesion strength, 15.2 kPa shear adhesion after 72 hours, 147 N puncture resistance, 0.2 mm thickness.

[OR]

.10 Self adhesive multilayer jacketing - equal to 3M Ventureclad 1579GCW series. Multi-ply laminate flexible jacketing, acrylic adhesive, zero permeability vapor barrier.

PART 3 - EXECUTION

3.1 GENERAL INSULATION APPLICATION REQUIREMENTS

.1 Unless otherwise specified, do not insulate following:

.1 factory insulated equipment and piping;

.2 heating piping within radiation unit enclosures, including blank filler sections of enclosures;

.3 heating piping in soffits and/or overhang spaces and connected to bare element radiation in spaces;

.4 branch potable water piping located under counters to serve counter mounted plumbing fixtures and fittings, except barrier-free lavatories;

.5 exposed chrome plated potable water angle supplies from concealed piping to plumbing fixtures and fittings, except barrier-free lavatories;

.6 heated liquid system pump casings, valves, strainers and similar accessories;

.7 heating system expansion tanks;

.8 fire protection pump casings;

.9 manufactured expansion joints and flexible connections;

.10 acoustically lined ductwork and/or equipment;

.11 factory insulated flexible branch ductwork;

.12 fire protection system water storage tanks;

.13 piping unions, except for unions in "cold" category piping.

.2 Install insulation directly over pipes and ducts, not over hangers and supports.

.3 Install piping insulation and jacket continuous through pipe openings and sleeves.

.4 Install duct insulation continuous through walls, partitions, and similar surfaces except at fire dampers.

.5 When insulating "cold" piping and equipment, extend insulation up valve bodies and other such projections as far as possible, and protect insulation jacketing from the action of condensation at its junction with metal.

.6 When insulating vertical piping risers 75 mm (3") diameter and larger, use insulation support rings welded directly above lowest pipe fitting, and thereafter at 4.5 m (14.7') centres and at each valve and flange. Insulate as per Thermal Insulation Association of Canada National Insulation Standards, Figure No. 9.

.7 Where piping and/or equipment is traced with electric heating cable, ensure cable has been tested and accepted prior to application of insulation, and ensure cable is not damaged or displaced during the application of insulation.

.8 Where existing insulation work is damaged as a result of mechanical work, repair damaged insulation work to Project work standards.

.9 Where mineral fibre rigid sleeve type insulation is terminated at valves, equipment, unions, etc., neatly cover exposed end of insulation with a purpose made PVC cover on "cold" piping, and with canvas jacket material on "hot" piping.

.10 Carefully and neatly gouge out insulation for proper fit where there is interference between weld bead, mechanical joints, etc., and insulation. Bevel away from studs and nuts to permit their removal without damage to insulation, and closely and neatly trim around extending parts of pipe saddles.

.11 Where thermometers, gauges, and similar instruments occur in insulated piping, and where access to heat transfer piping balancing valve ports and similar items are required, create a neat, properly sized hole in insulation and provide a suitable grommet in the opening.

3.2 INSULATION FOR HORIZONTAL PIPE AT HANGERS AND SUPPORTS

.1 At each hanger and support location for piping 50 mm (2") diameter and larger and scheduled to be insulated, except where roller hangers and/or supports are required, and unless otherwise specified, supply a factory fabricated section of phenolic foam pipe insulation with integral vapour barrier jacket and captive galvanized steel shield. Supply insulation sections to piping installers for installation as pipe is erected.

.2 For 100 mm (4") diameter and larger heating system piping where roller type hangers and supports are provided, a steel saddle will be tack welded to pipe at each roller hanger or support location. Pack saddle voids with loose mineral wool insulation.

3.3 PIPE INSULATION REQUIREMENTS – MINERAL FIBRE

.1 Insulate following pipe inside building and above ground with mineral fibre insulation of thickness indicated:

.1 domestic cold water piping, less than 100 mm (4") dia. – 25 mm (1") thick;

.2 domestic cold water piping, greater than or equal to 100 mm (4") dia. – 40 mm (1-½") thick;

.3 domestic hot water piping, less than 40 mm (1-½") dia. – 25 mm (1") thick;

.4 domestic hot water piping, greater than or equal to 40 mm (1½") dia. – 40 mm (1-½") thick;

.5 tempered domestic water piping, supply and return, less than 40 mm (1-½") dia. – 25 mm (1") thick;

.6 tempered domestic water piping, supply and return, greater than or equal to 40 mm (1-½") dia. – 50 mm (2") thick;

.7 storm drainage piping from roof drains to the point where main vertical risers extend straight down, without offsets, and connect to horizontal underground mains – 25 mm (1") thick;

.8 condensate drainage piping from fan coil unit or any other air conditioning system/unit drain pans to main vertical drain risers or to indirect drainage point – 25 mm (1") thick;

.9 drainage piping from refrigerated drinking fountains to nearest 75 mm (3") dia. or larger drain pipe – 25 mm (1") thick;

.10 chilled water piping, supply and return, less than 100 mm (4") dia. – 25 mm (1") thick;

.11 chilled water piping, supply and return, greater than or equal to 100 mm (4") dia. – 40 mm (1-½") thick;

.12 chilled glycol solution piping, supply and return, less than 100 mm (4") dia. – 25 mm (1") thick;

.13 chilled glycol solution piping, supply and return, greater than or equal to 100 mm (4") dia. – 40 mm (1-½") thick;

.14 hot water heating piping, supply and return, less than 40 mm (1-½") dia. – 40 mm (1-½") thick;

.15 hot water heating piping, supply and return, greater than or equal to 40 mm (1-½") dia. – 50 mm (2") thick;

.16 glycol solution heating or heat reclaim piping, supply and return, less than 40 mm (1-½") dia. – 40 mm (1-½") thick;

.17 glycol solution heating or heat reclaim piping, supply and return, greater than or equal to 40 mm (1-½") dia. – 50 mm (2") thick;

.18 low pressure (to 140 kPa (20 psi)) steam piping, less than 100 mm (4") dia. – 65 mm (2-½") thick;

.19 low pressure (to 140 kPa (20 psi)) steam piping, greater than or equal to 100 mm (4") dia. – 80 mm (3") thick;

.20 medium pressure (140 kPa to 415 kPa (20 psi to 60 psi)) steam piping, less than 40 mm (1-½") dia. – 100 mm (4") thick;

.21 medium pressure (140 kPa to 415 kPa (20 psi to 60 psi)) steam piping, greater than or equal to 40 mm (1-½") dia. – 112 mm (4-½") thick;

.22 low pressure condensate piping, less than 40 mm (1-½") dia. – 40 mm (1-½") thick;

.23 low pressure condensate piping, greater than or equal to 40 mm (1-½") dia. – 50 mm (2") thick;

.24 medium pressure condensate piping, less than 40 mm (1-½") dia. – 40 mm (1-½") thick;

.25 medium pressure condensate piping, greater than or equal to 40 mm (1-½") dia. – 50 mm (2") thick;

.26 boiler feedwater piping complete – 25 mm (1") thick;

.27 boiler blowdown piping complete – 40 mm (1-½") thick;

.28 chilled domestic cold water piping from remote water cooler(s) to drinking fountain(s) – 40 mm (1-½") thick;

.29 piping indicated to be traced with electric heating cable – minimum 50 mm (2") thick;

.30 drum drip(s) in dry zone standpipe and/or sprinkler system piping – 50 mm (2") thick;

.31 air compressor set fresh air intake piping – 25 mm (1") thick;

.32 heat pump equipment earthloop piping – 25 mm (1") thick.

.2 Secure overlap flap of the sectional insulation jacket tightly in place. Cover section to section butt joints with tape sealant.

.3 Insulate fittings with sectional pipe insulation mitred to fit tightly, and cover butt joints with tape sealant, or, alternatively, wrap fittings with blanket mineral fibre insulation to a thickness and insulating value equal to the sectional insulation, secure in place with adhesive and/or wire, and cover with PVC fitting covers.

.4 Unless otherwise specified, insulate unions, valves, strainers, and similar piping system accessories in "cold" piping with cut and tightly fitted segments of sectional pipe insulation with joints covered with tape sealant, or, alternatively, wrap piping union, valve, strainer, etc., with blanket mineral fibre and cover with PVC covers as for paragraph above.

.5 Terminate sectional insulation approximately 50 mm (2") from flange or coupling on each side of flange or coupling. Cover flange or coupling with a minimum 50 mm (2") thickness of blanket mineral fibre insulation wide enough to butt tightly to ends of adjacent sectional insulation. Secure blanket insulation in place and cover with a purpose made PVC coupling cover.

.6 Drum drips in dry zone sprinkler and/or standpipe system piping will be traced with electric heating cable as part of electrical work, and are generally not shown on drawing(s). Confirm number and size of drum drips required with trade providing piping and include for insulation to suit. Wherever possible drum drips will be located in heated areas.

.7 Take special care at concealed water rough-in piping at plumbing fixtures to ensure piping is properly insulated. If necessary due to space limitations, use 12 mm (½") thick sectional pipe insulation in lieu of 25 mm (1") thick insulation.

.8 Insulate seismic restraint hardware such as hanger rods, braces, anchors, etc., directly connected to "cold" category piping and equipment for a distance of 300 mm (12") from piping or equipment with insulation and finish to match pipe or equipment insulation. Coat seismic restraint hardware for a distance of 300 mm (12") from the termination of insulation with Robson Thermal "NO-SWEAT-FX" water based anti-condensation coating.

3.4 PIPE INSULATION REQUIREMENTS – MINERAL WOOL

.1 Insulate following pipe inside building and above ground with high temperature mineral wool insulation of thickness indicated:

.1 high pressure (above 415 kPa (60 psi)) steam piping, less than 40 mm (1-½") dia. – 100 mm (4") thick;

.2 high pressure (above 415 kPa (60 psi)) steam piping, greater than or equal to 40 mm (1-½") dia. – 115 mm (4-½") thick;

.3 high pressure condensate piping – 50 mm (2") thick;

.4 engine-generator set exhaust system piping – 75 mm (3") thick.

.2 Generally, install insulation on piping as specified above for mineral fibre insulation.

.3 Generally, install insulation on fittings as specified above for mineral fibre insulation but cover with canvas, not PVC fitting covers.

3.5 PIPE INSULATION REQUIREMENTS – FLEXIBLE FOAM ELASTOMERIC

.1 Install flexible elastomeric pipe insulation in strict accordance with manufacturer’s published instructions to suit the application, and using adhesive, joint sealants, and finish to produce a water-tight installation. Insulate following pipe with flexible elastomeric pipe insulation of thickness indicated:

.1 refrigerant piping inside and outside building – 25 mm (1") thick.

3.6 PIPE INSULATION REQUIREMENTS – CLOSED CELL FOAMED GLASS

.1 Install closed cell foamed glass insulation in strict accordance with manufacturer's published instructions to suit the application, and using adhesive, joint sealants, and jacketing to produce a water-tight installation. Insulate following pipe with closed cell foamed glass of thickness indicated:

.1 piping located outside building and indicated to be heat traced – minimum 50 mm (2") thick.

3.7 PIPE INSULATION REQUIREMENTS – FIRE RATED INSULATION

.1 Where pipe (inside building and above ground) which is to be insulated as specified above penetrates fire rated construction, provide fire-rated, non-combustible sectional insulation on portion of pipe in fire barrier and for a distance of 50 mm (2") on either side of fire barrier. Insulation thickness is to be as specified, but in any case minimum 25 mm (1").

3.8 INSTALLATION OF WEATHER-PROOF JACKETED INSULATION

.1 Install sectional weather-proof jacketed pipe insulation in strict accordance with manufacturer's instructions to produce a water-tight weather-proof installation. Insulate fittings with blanket type glass fibre insulation of a thickness and insulating value equal to the sectional insulation and secured in place with adhesive and wire. Jacket fittings with manufactured aluminium fitting covers sealed water-tight. Insulate following pipe with weather-proof jacketed insulation:

.1 [ ];

.2 [ ].

3.9 INSTALLATION OF BARRIER FREE LAVATORY INSULATION KITS

.1 Provide manufactured insulation kits to cover exposed drainage and water piping under barrier free lavatories.

3.10 EQUIPMENT INSULATION REQUIREMENTS – BLANKET TYPE MINERAL FIBRE

.1 Insulate following equipment with mineral fibre blanket type insulation of thickness indicated:

.1 chilled water and/or domestic cold water pump casings – 40 mm (1-½") thick;

.2 roof drain sumps where inside the building – 25 mm (1") thick;

.3 water meter(s) – 40 mm (1-½") thick;

.4 top of radiant ceiling panels – per manufacturer's recommendation or minimum 50 mm (2") thick, whichever is greater.

.2 Unless otherwise noted, wrap equipment to a thickness and insulating value equal to an equivalent thickness of rigid sectional pipe insulation. Laminate insulation in place with a full coverage of adhesive and secure with wire. Apply a jacket of insulation vapour barrier material secured in place with adhesive or sealant tape.

.3 Cover roof drain sumps with purpose made PVC fitting covers.

.4 Lay fibreglass blanket on radiant ceiling panels after testing is complete.

3.11 EQUIPMENT INSULATION REQUIREMENTS – SEMI-RIGID MINERAL FIBRE

.1 Insulate following equipment with semi-rigid mineral fibre board insulation of thickness indicated:

.1 refrigeration machine water chiller(s) and suction elbow(s) – 50 mm (2") thick;

.2 uninsulated domestic hot water storage tank(s) – 40 mm (1-½") thick;

.3 shell and tube type heat exchangers – 40 mm (1-½") thick;

.4 condensate receiver(s) – 40 mm (1-½") thick;

.5 flash tanks – 40 mm (1-½") thick;

.6 hot well tank – 40 mm (1-½") thick;

.7 deaerating feedwater heater – 40 mm (1-½") thick;

.8 blow-down tank – 40 mm (1-½") thick;

.9 chilled water or chilled glycol solution storage tank – 50 mm (2") thick;

.10 heating main air separator – 40 mm (1-½") thick;

.11 chilled water expansion tank – 40 mm (1-½") thick.

.2 Install insulation as required to fit shape and contour of equipment. Secure insulation in place with adhesive, and with aluminum straps on 450 mm (18") centres. Apply a 6 mm (¼") thick skim coat of insulating cement, then, when insulating cement has dried, apply a 6 mm (¼") thick coat of cement trowelled smooth.

.3 For "cold" equipment, prime insulation with suitable sealer and apply a jacket of glass thread reinforced foil and kraft paper vapour barrier jacket material laminated in place with a full coverage of adhesive.

.4 Provide removable and replaceable insulated metal covers for equipment with removable heads to permit heads to be removed and replaced without damaging adjacent insulation work.

3.12 EQUIPMENT INSULATION REQUIREMENTS – SEMI-RIGID MINERAL WOOL

.1 Insulate following equipment with calcium silicate equipment insulation of thickness indicated:

.1 engine-generator set exhaust system silencer(s) – 75 mm (3") thick;

.2 uninsulated boiler breeching where inside the building – 75 mm (3") thick.

.2 Cut or mitre insulation (or use factory scored type insulation) to fit shape and contour of equipment and secure insulation in place with aluminum straps on 450 mm (18") centres. Point joints, mitres, scores and gaps with insulating cement. Apply a 12 mm (½") thick coat of insulating cement and trowel smooth.

3.13 EQUIPMENT INSULATION REQUIREMENTS – CLOSED CELL FOAMED GLASS

.1 Insulate following equipment with closed cell foam glass insulation of thickness indicated:

.1 [ ];

.2 [ ].

.2 Install insulation in strict accordance with manufacturer’s published instructions using adhesive, wrap, sealant, etc., to secure insulation in place, to secure and seal joints, and to produce a 100% water-tight installation.

3.14 EQUIPMENT INSULATION REQUIREMENTS – REMOVABLE/REUSABLE TYPE

.1 Provide custom designed and manufactured removable and reusable insulation covers for following:

.1 plate type heat exchanger(s);

.2 150 mm (6") dia. and larger piping strainers, backflow preventers, etc.;

.3 diesel engine exhaust manifolds;

.4 150 mm (6") dia. and larger steam traps and similar equipment.

.2 Provide "wrap type" removable and reusable insulation covers for "cold" circuit balancing valves, backflow preventers, and similar items, and for steam traps and similar items requiring service in piping less than 150 mm (6") dia.

3.15 DUCTWORK INSULATION REQUIREMENTS – MINERAL FIBRE

.1 Insulate following ductwork systems inside building and above ground with mineral fibre insulation of thickness indicated:

.1 Outdoor air and combustion air intake ductwork, casings and plenums from fresh air intakes to and including mixing plenums or sections, or, if mixing plenums or sections are not provided, to first heating coil, or if both mixing plenums or sections and heating coil sections are not provided, and fresh air is not tempered, then the fresh air ductwork system complete – minimum 40 mm (1-½") thick as required;

.2 mixed supply air or preheated supply air casings, plenums and sections to and including the fan section where not factory insulated – minimum 25 mm (1") thick rigid board or minimum 40 mm (1-½") thick flexible blanket as required;

.3 supply air ductwork outward from fans, except for supply ductwork exposed in area it serves – minimum 25 mm (1") thick rigid board or minimum 40 mm (1-½") thick flexible blanket as required;

.4 exhaust discharge ductwork for a distance of 3 m (10') downstream (back) from exhaust openings to atmosphere, including any exhaust plenums within the 3 m (10') distance – minimum 25 mm (1") thick rigid board or minimum 40 mm (1-½") thick flexible blanket as required;

.5 any other ductwork, casings, plenums, or sections specified or detailed on drawings to be insulated – thickness as specified.

.2 Provide rigid board type insulation for casings, plenums, and exposed rectangular ductwork. Provide blanket type insulation for round ductwork and concealed rectangular ductwork.

.3 Liberally apply adhesive to surfaces of exposed rectangular ducts and/or casings. Accurately and neatly press insulation into adhesive with tightly fitted butt joints. Provide pin and washer insulation fasteners at 300 mm (12") centres on bottom and side surfaces. Secure and seal joints with 75 mm (3") wide tape sealant. Additional installation requirements as follows:

.1 at trapeze hanger locations, install insulation between duct and hanger;

.2 provide drywall type metal corner beads on edges of ductwork, casings and plenums in equipment rooms, service corridors, and any other area where insulation is subject to accidental damage, and secure in place with tape sealant.

.4 Liberally apply adhesive to surfaces of concealed rectangular or oval ductwork, and wrap insulation around duct with a top butt joint and tight section to section butt joints. Provide pin and washer insulation fasteners at 300 mm (12") centres on bottom surfaces. Secure and seal joints with 75 mm (3") tape sealant. At each trapeze type duct hanger, provide a 100 mm (4") wide full length piece of rigid mineral fibre board insulation between duct and hanger.

.5 Accurately cut sections of insulation to fit tightly and completely around exposed and concealed round or oval ductwork. Liberally apply adhesive to surfaces of duct, and wrap insulation around duct with a top butt joint and tight section to section butt joints. Seal joints with tape sealant. At duct hanger locations install insulation between duct and hanger. At each hanger location for concealed ductwork where flexible blanket insulation is used, provide a 100 mm (4") wide full circumference strip of semi-rigid board type duct insulation between duct and hanger.

.6 Insulation application requirements common to all types of rigid ductwork are as follows:

.1 at duct connection flanges, insulate flanges with neatly cut strips of rigid insulation material secured with adhesive to side surfaces of flange with a top strip to cover exposed edges of the side strips, then butt the flat surface duct insulation up tight to flange insulation, or, alternatively, increase insulation thickness to depth of flange and cover top of flanges with tape sealant;

.2 installation of fastener pins and washers is to be concurrent with duct insulation application;

.3 cut insulation fastener pins almost flush to washer and cover with neatly cut pieces of tape sealant;

.4 accurately and neatly cut and fit insulation at duct accessories such as damper operators (with standoff mounting) and pitot tube access covers;

.5 prior to concealment of insulation by either construction finishes or canvas jacket material, patch vapour barrier damage by means of tape sealant.

3.16 DUCTWORK INSULATION REQUIREMENTS – FLEXIBLE ELASTOMERIC

.1 Insulate exposed exterior ductwork (except outdoor air intake ductwork) and associated plenums and/or casings outside building with minimum 75 mm (3”) thick flexible elastomeric sheet insulation as required, applied in 2 minimum 40 mm (1 ½”) thick layers with staggered tightly butted joints.

.2 Install with adhesive in strict accordance with manufacturer’s instructions to produce a weather-proof installation. Ensure sheet metal work joints are sealed watertight prior to applying insulation.

.3 Provide Calcium Silicate insulation between ductwork and duct supports. Tightly butt flexible elastomeric insulation to Calcium Silicate insulation. Cover Calcium Silicate insulation with a continuous sheet of self-adhesive multilayer jacketing which overlaps 75 mm past the Calcium Silicate insulation to the adjacent flexible elastomeric insulation.

.4 Provide extruded polystyrene tapered insulation between flexible elastomeric insulation and jacketing to allow for water runoff on all exterior duct work.

3.17 DUCTWORK INSULATION REQUIREMENTS – CALCIUM SILICATE

.1 Insulate following kitchen exhaust ductwork with minimum 40 mm (1-½") thick calcium silicate block insulation:

.1 kitchen exhaust ductwork from exhaust hood to masonry shaft – 2 hour rating;

.2 stairwell pressurization ductwork from fan to stairwell – 1 hour rating;

.3 Trauma Room and Operating Room supply and exhaust ductwork complete – 1 hour rating.

.2 Secure insulation in place with adhesive and with wire on 450 mm (18") centres. Point gaps and joints with insulating cement. Where ductwork is exposed, cover insulation with wire mesh secured to wire and with edges laced together and apply a coat of finishing cement trowelled smooth. Use drywall type metal corner bead for duct edges where finishing cement is applied.

3.18 DUCT WRAP REQUIREMENTS – FIRE RATED MATERIAL

.1 Provide blanket type fire rated duct wrap system material for following ductwork to produce fire rating indicated:

.1 kitchen exhaust ductwork from exhaust hood to masonry shaft – 2 hour rating;

.2 stairwell pressurization ductwork from fan to stairwell – 1 hour rating;

.3 Trauma Room and Operating Room supply and exhaust ductwork complete – 1 hour rating.

.2 Install duct wrap material in accordance with ULC design requirements and supplier’s/manufacturer's instructions.

.3 Coordinate installation of duct wrap with installation of ductwork.

.4 Arrange and pay for duct wrap supplier to examine completed duct wrap system at site. Submit a letter from supplier to certifying duct wrap system has been properly installed.

3.19 APPLICATION OF INSULATING COATINGS

.1 Apply, in accordance with manufacturer’s instruction, insulating coatings to following bare metal surfaces:

.1 paint bare metal surfaces clear of "cold" piping and/or equipment insulation for a distance of from 300 mm (12") to 600 mm (24") clear of pipe or equipment insulation, with "No Sweat-FX" anti-condensation coating;

.2 paint bare metal surfaces associated with mechanical systems with an operating temperature 60°C (140°F) with "ThermaLite" insulating coating.

.2 Apply coatings with a brush. Remove any splatter or excess coating from adjacent surfaces.

3.20 INSULATION FINISH REQUIREMENTS

.1 Unless otherwise shown and/or specified, jacket exposed mineral fibre insulation, and calcium silicate duct insulation work inside building with canvas secured in place with a full covering coat of lagging adhesive. Accurately cut canvas with scissors or a knife. Do not rip or tear canvas to size. Remove lagging adhesive splatter from adjacent uninsulated surfaces.

.2 Unless otherwise shown or specified, jacket exposed mineral fibre insulation listed below with canvas jacket secured in place with a full covering coat of coloured lagging adhesive. Accurately cut canvas with scissors or a knife. Do not rip or tear canvas to size. Remove lagging adhesive splatter from adjacent surfaces. Insulated services to receive coloured lagging adhesive are as follows:

.1 Chilled Water Piping;

.2 Chilled Glycol Piping

.3 Condenser Water Piping;

.4 Domestic Cold Water Piping;

.5 Domestic Hot Water Piping;

.6 Domestic Hot Water Recirculation Piping;

.7 High Temperature Heating Water Piping;

.8 High Temperature Heating Glycol Piping;

.9 Heating Water Piping;

.10 Condensate Drain Piping;

.11 Low Pressure Steam Piping;

.12 High Pressure Steam Piping;

.13 Indoor Ductwork;

.14 [ ].

.3 Jacket exposed pipe insulation work inside building with white sheet PVC and fitting covers. Install sheet PVC and fitting covers tightly in place with overlapped circumferential and longitudinal joints arranged to shed water. Seal joints to produce a neat water-tight installation. Provide slip-type expansion joints where required by manufacturer’s instructions.

.4 Install rigid aluminum jacket material tightly in place with overlapped circumferential joints positioned to shed water and covered with butt straps supplied with the jacket. Provide aluminum jacket for following insulation:

.1 Chilled Water Piping;

.2 Chilled Glycol Piping

.3 Condenser Water Piping;

.4 High Temperature Heating Water Piping;

.5 High Temperature Heating Glycol Piping;

.6 Heating Water Piping;

.7 Condensate Drain Piping;

.8 Refrigerant Piping;

.9 Outdoor Ductwork;

.10 [ ].

.5 Install adhesive backed flexible aluminum to cleaned and primed metal surfaces which are between -23°C and 74°C (-10°F and 165°F) in strict accordance with manufacturer's published instructions and details, including shingle type overlap joints to shed water, and use of a hand roller to concentrate pressure on seams. Provide adhesive backed flexible aluminum jacket for following insulation:

.1 Chilled Water Piping;

.2 Chilled Glycol Piping

.3 Condenser Water Piping;

.4 High Temperature Heating Water Piping;

.5 High Temperature Heating Glycol Piping;

.6 Heating Water Piping;

.7 Condensate Drain Piping;

.8 Refrigerant Piping;

.9 Outdoor Ductwork;

.10 [ ].

.6 Install rigid stainless steel jacket material tightly in place with overlapped circumferential joints positioned to shed water and covered with butt straps supplied with jacket. Provide stainless steel jacket for following:

.1 Chilled Water Piping;

.2 Chilled Glycol Piping

.3 Condenser Water Piping;

.4 High Temperature Heating Water Piping;

.5 High Temperature Heating Glycol Piping;

.6 Heating Water Piping;

.7 Condensate Drain Piping;

.8 Refrigerant Piping;

.9 Outdoor Ductwork;

.10 [ ].

.7 Apply 2 heavy coats of "PITTCOTE 300e" coating with 24 hr between coats to foamed glass insulation exposed above grade.

.8 Apply 2 coats (with 24 hr between coats) of specified coating to flexible elastomeric insulation outside building.

.9 Install 3M Ventureclad series [1577CW] [1579GCW] on insulated ductwork and ensure supports are installed on the outside of the jacketing. Jacketing shall be finished as [Flat White] [Aluminum] [Aluminum Embossed]. Provide necessary insulation and jacketing materials at the time of duct work installation. Do not penetrate jacketing or install jacketing around duct supports. Provide 24GA G90 38 mm x 38 mm steel angle to protect all corners of rectangular ductwork and install between insulation and jacketing. Steel angle shall be continuous on entire duct work run. Provide additional steel angle between jacketing and duct support. Ensure jacketing is continuous with minimum 75 mm (or as required by manufacturer) overlapping on all joints. Provide jacketing on the following duct work:

.1 Exposed exterior duct work including outdoor air intake duct work, plenums and casings installed outside;

.2 Exposed interior insulated duct work;

.3 Interior outdoor air intake duct work, plenums, and casings;

.4 Single wall plenum casings (intake or exhaust) field insulated;

.5 Wherever indicated on drawings;

.10 Install 3M Ventureclad series [1577CW] [1579GCW] on exposed piping and ensure supports are installed on the outside of the jacketing. Do not penetrate or install jacketing around pipe supports. Jacketing shall be finished as [Flat White] [Aluminum] [Aluminum Embossed]. Provide galvanized insulation shield between insulation and jacketing at support points. Ensure jacketing is continuous with minimum 75 mm (or as required by manufacturer) overlapping on all joints. Provide jacketing on the following piping:

.1 Chilled water;

.2 Chilled glycol;

.3 High Temperature Heating Water;

.4 High Temperature Heating Glycol;

.5 Heating Water;

.6 Heating glycol;

.7 Low pressure steam (<104 kPa);

.8 Low pressure steam (<104 kPa) condensate;

.9 Domestic cold water piping;

.10 Domestic hot water piping;

.11 Coil condensate drain piping;

.12 Wherever indicated on drawings.

END OF SECTION

PART 1 - GENERAL

1.1 SECTION INCLUDES

.1 This Section specifies commissioning requirements that are common to Mechanical Divisions work Sections and it is a supplement to each Section and is to be read accordingly. When requirements of this Section contradict requirements of Division 00 or Division 01, conditions of Division 00 or Division 01 to take precedence.

1.2 COMMISSIONING AGENT INVOLVEMENT VERSUS WARRANTY OBLIGATIONS

.1 Involvement of Commissioning Agent performing duties as described in this Section is not in any way to void or alter any Contractual warranty obligations.

1.3 SUBMITTALS

.1 Submit to Commissioning Agent, at same time as submittal to the Consultant, one copy of each shop drawing or product data sheet associated with equipment or systems to be commissioned.

.2 Submit for review, a Commissioning Plan with schedule, commissioning procedures for commissioning events, and a copy of Commissioning Agent's commissioning data sheets for equipment/systems to be commissioned.

.3 Submit a list of commissioning instruments and for each instrument, indicate purpose of instrument and include a recent calibration certificate.

.4 Submit equipment and system manufacturer's start-up and test report sheets for review a minimum of 1 month prior to equipment and system start-up procedures.

1.4 CLOSEOUT SUBMITTALS

.1 After start-up and successful pre-functional performance testing and submittal of completed forms, submit, for each system or subsystem, a letter confirming pre-functional performance testing has been successfully completed and system or subsystem is ready for functional performance testing and commissioning process to commence.

1.5 DEFINITIONS

.1 Commissioning: process of demonstrating to Owner and Consultant, for purpose of final acceptance, by means of successful and documented functional performance testing, that systems and/or subsystems are capable of being operated and maintained to perform in accordance with requirements of Contract Documents, all as further described below.

.2 Commissioning Agent: commissioning authority who will supervise commissioning process, and who will recommend final acceptance of commissioned mechanical work.

.3 Start-Up and Adjusting: process of equipment manufacturer's/supplier's technical personnel, with Contractor, starting and operating equipment and systems, making any required adjustments, documenting process, and submitting manufacturer's/supplier's start-up reports to confirm equipment has been properly installed and is operational as intended.

.4 Pre-Functional Performance Testing: testing, adjusting and operating of components, equipment, systems and/or subsystems, by Contractor, after start-up but before functional performance testing, to confirm components, equipment, systems and/or subsystems operate in accordance with requirements of Contract Documents, including modes and sequences of control and monitoring, interlocks, and responses to emergency conditions, and including submittal of pre-functional performance testing documentation sheets.

.5 Functional Performance Testing: a repeat of successful pre-functional performance testing by Contractor, in presence of Commissioning Agent and the Consultant with completed Commissioning

Agent's commissioning documentation sheets to document, validate and verify equipment, systems and subsystems are complete in all respects, function correctly, and are ready for acceptance.

.6 Commissioning Documentation Sheets: prepared sheets for pre-functional performance testing and for functional performance testing supplied by Commissioning Agent for each piece of equipment/system to be commissioned, each sheet or set of sheets complete with Project name and number, date of commissioning, equipment/system involved, equipment/system name and model number, equipment tag in accordance with drawings, and, for each commissioning procedure listed, a column giving expected data in accordance with Contract Documents, a column to fill in observed data during commissioning, and space for signatures of Contractor and Commissioning Agent.

.7 Systems Operating Manual: a manual prepared by Commissioning Agent to present an overview of building mechanical systems and equipment to be used by building maintenance personnel to assist them in daily operation of systems.

.8 Validate: to confirm by examination and witnessing tests correctness of equipment and system operation.

1.6 COMMISSIONING AGENT

.1 Commissioning Agent will be retained and paid by Owner to perform mechanical work commissioning specified in this Section. Cooperate in all respects with Owner's Commissioning Agent.

1.7 QUALITY ASSURANCE

.1 Commissioning work is to be in accordance with requirements of following:

.1 CSA Z320, Building Commissioning Standard and Check Sheets;

.2 CSA Z8001, Commissioning of Health Care Facilities;

.3 ASHRAE Guideline 0, The Commissioning Process;

.4 ASHRAE Guideline 1.1, The HVAC Commissioning Process;

.5 ASHRAE Guideline 1.2, The Commissioning Process for Existing HVAC&R Systems;

.6 ASHRAE Guideline 1.5, Commissioning Smoke Control Systems;

.7 Owner designated Commissioning Agent.

1.8 COMMISSIONING OBJECTIVES

.1 Objectives of commissioning process:

.1 to support quality management by means of monitoring and checking installation;

.2 to verify equipment/system performance by means of commissioning of completed installation;

.3 to move completed equipment/systems from "static completion" state to "dynamic" operating state so as to transfer a complete and properly operating installation from Contractor to Owner.

1.9 TESTING EQUIPMENT

.1 Supply instruments and test equipment required to conduct start-up, testing and commissioning procedures.

PART 2 - PRODUCTS – NOT USED

PART 3 - EXECUTION

3.1 COMMISSIONING

.1 Commission work in accordance with requirements of this Section and as required by Commissioning Agent.

.2 Prerequisites to successful completion of commissioning:

.1 submittal of signed start-up and test reports;

.2 completion of system testing, adjusting and balancing (TAB), and acceptance of TAB reports;

.3 permanent electrical and control connections of equipment;

.4 successful completion and documentation of pre-functional performance testing;

.5 submittal of letters to the Consultant certifying systems and subsystems have been started, tested, adjusted, successfully pre-functional performance tested, are ready for functional performance testing, and are in accordance with requirements of Contract Documents.

3.2 PHASING OF COMMISSIONING

.1 If Project will be constructed in phases, phase commissioning accordingly to suit progress and phases of Work.

3.3 DEFICIENCIES LISTED DURING COMMISSIONING

.1 Correct deficiencies listed by the Consultant and Commissioning Agent during commissioning process within 15 calendar days of notification unless agreed otherwise with the Consultant, and when deficiencies have been corrected, notify the Consultant and Commissioning Agent immediately.

3.4 SYSTEMS TO BE COMMISSIONED

.1 Mechanical systems to be commissioned include, but are not to be limited to, systems described below. Specific commissioning procedures are to be as directed by Commissioning Agent.

.2 Commissioning of drainage systems includes:

.1 commissioning of drainage pumps and controls by means of tests recommended by manufacturer to confirm proper operation and performance;

.2 commissioning of equipment such as interceptors and backflow preventers.

.3 Commissioning of fire protection systems will be considered complete upon preparation and submittal by Contractor of completion certificates required by applicable NFPA Standards, demonstration of proper system operation to local Fire Chief and any other authorities, including Owner’s insurance underwriter as required, and coordination and cooperation with fire alarm system commissioning procedures, in particular smoke control systems and other such fan system control sequences.

.4 Commissioning of water systems (all piping extended from Municipal main) includes:

.1 commissioning of pumps and controls;

.2 commissioning of water heaters;

.3 commissioning of piping specialties such as backflow preventers, mixing valves, and similar components;

.4 commissioning of trap seal primer units, including adjustment of water flows and confirmation of water flow at each connected trap;

.5 commissioning of plumbing fixtures.

.5 Commissioning of medical gas systems is not part of mechanical commissioning work and will be done as part of work specified in the Section 22 60 00.70 – Gas and Vacuum Systems for Laboratory and Healthcare Facilities.

.6 Commissioning of heating systems includes piping, piping specialties, equipment, and control, as well as checking and validating temperature and flow documentation contained in TAB reports. If TAB is not done during heating season, a follow-up site visit during heating season will be required to confirm proper flows and temperatures, and any required system "fine tuning".

.7 Commissioning of cooling systems includes piping, piping specialties, equipment, and control, as well as checking and validating temperature and flow documentation contained in TAB reports. If TAB is not done during cooling season, a follow-up site visit during cooling season will be required to confirm proper flows and temperatures, and any required system "fine tuning".

.8 Commissioning of HVAC chemical treatment systems includes feed and monitoring equipment, and testing of system fluids to confirm proper concentration of chemical.

.9 Commissioning of air handling systems includes equipment, ductwork, ductwork specialties, controls, interlocks, and checking and validating air capacities and flows in accordance with TAB reports.

.10 Control work commissioning includes confirmation of proper operation of individual control components, and overall operation of controls in conjunction with operation of connected building systems, including heating season/cooling season testing requirements specified above.

.11 Commissioning of BAS includes confirmation of proper operation of components, input/output points, hardware and software, and demonstration of system performing required procedures.

.12 Commissioning of special usage room controls includes confirmation of proper operation of individual components, and proper operation of overall control system, all in accordance with governing Codes and Standards.

.13 Commissioning of noise and vibration control equipment includes noise and vibration measurements to confirm proper operation of equipment.

3.5 COMMISSIONING PROCESS

.1 Perform commissioning process in stages and include, but not be limited to, following:

.1 Stage 1: Commissioning of equipment/systems as listed in this Section, which is a prerequisite to an application for Substantial Performance of the Work and includes supervising and validating results of functional performance testing, and submittal of reviewed Systems Operating Manual.

.2 Stage 2: Commissioning work performed 12 months after issue of a Certificate of Substantial Performance and which includes supervision of Contractor’s "fine tuning" of equipment/systems through seasonal occupancy, and any other such work to achieve optimal comfort and performance conditions.

.3 Stage 3: Successful completion of satisfactory equipment/system operation during 1st month after issue of a Certificate of Total Performance of the Work.

.4 Stage 4: Successful completion of satisfactory equipment/system operation during 3rd month after issue of a Certificate of Total Performance of the Work.

.5 Stage 5: Successful seasonal commissioning of building.

3.6 RESPONSIBILITIES OF CONTRACTOR

.1 During construction phase, Contractor is to:

.1 prepare and submit an installation schedule which includes a time schedule for each activity with lead and lag time allowed and indicated, shop drawing and working detail drawing submissions, and major equipment factory testing and delivery dates;

.2 prepare and submit a commissioning schedule which is to include a time schedule coordinated with installation schedule referred to above and Commissioning Agent, and allowances for additional time for re-tests as may be required, and update schedule on a monthly basis as required;

.3 when requested by Commissioning Agent, arrange site commissioning meetings with Owner, the Consultant, and applicable subcontractors present, to be chaired by Commissioning Agent who will also prepare and distribute meeting minutes;

.4 promptly correct reported deficient work, and report when corrective work is complete;

.5 where required by Codes and/or Specification, retain equipment manufacturers/suppliers or independent 3rd parties to certify correct installation of equipment/systems;

.6 under supervision of equipment manufacturers/suppliers, start-up and adjust equipment to design requirements, and submit start-up sheets which include equipment data such as manufacturer and model number, serial number where applicable, and performance parameters, all signed by equipment manufacturer/supplier and Contractor;

.7 complete Commissioning Agent's commissioning data sheets for multiple items of smaller equipment such as air terminal boxes, fan coil units, backflow preventers, etc., submit sheets to Commissioning Agent, accompany Commissioning Agent for an on-site check of 30% of data sheet information for each type of equipment, and perform any corrective action required as a result of site checks;

.8 perform system testing, adjusting and balancing and, when complete, issue a copy of final report to Commissioning Agent for review and a site check of results, and perform any corrective work required as a result of site checks by Commissioning Agent;

.9 in accordance with updated commissioning schedule and actual progress at site, certify in writing to the Consultant and Commissioning Agent that equipment and/or systems are complete, have been checked, started and adjusted, successfully pre-functional performance tested and documented, and are ready for functional performance testing and commissioning procedures, giving the Consultant and Commissioning Agent a minimum of 5 working days' notice;

.10 perform system and subsystem functional performance testing under supervision of Commissioning Agent, and submit to the Consultant and Commissioning Agent, completed and signed functional performance testing and commissioning data sheets (issued by Commissioning Agent) and also signed by Commissioning Agent.

.2 During post construction phase, Contractor is to:

.1 optimize system operation in accordance with building occupant's needs and comments using System Operation Manual prepared by Commissioning Agent as reference;

.2 complete commissioning procedures, activities, and performance verification procedures that were delayed or not concluded during construction phase;

.3 accompanied by Commissioning Agent, complete system checks and "fine tuning" with signed documentation as follows:

.1 once during 1st month of building operation;

.2 once during 3rd month of building operation;

.3 once between 4th and 10th months in a season opposite to 1st and 3rd month visits.

.4 correct deficiencies revealed by system checks described above, and, where required, involve equipment manufacturers/suppliers during corrective actions, and report completion of corrective work;

.5 3 months after Substantial Completion conduct a question and answer session(s) at building with Owner's operating and maintenance personnel, with duration of session(s) dictated by number of questions and concerns that have to be addressed.

END OF SECTION

PART 1 - GENERAL

1.1 REFERENCES

.1 Domestic water piping and valves are to comply with following codes, regulations, and standards (as applicable):

.1 applicable local codes and regulations;

.2 CAN/CSA B64, Backflow Preventers and Vacuum Breakers;

.3 CAN/CSA B125.1, Plumbing Supply Fittings;

.4 CAN/CSA B125.3, Plumbing Fittings;

.5 CAN/CSA B137 Series, Thermoplastic Pressure Piping Compendium;

.6 NSF/ANSI 14, Plastics Piping System Components and Related Materials;

.7 NSF/ANSI 61, Drinking Water System Components – Health Effects;

.8 NSF/ANSI 372, Drinking Water System Components – Lead Content.

1.2 SUBMITTALS

.1 Submit shop drawings/product data sheets for all products specified in Part 2 of this Section except for pipe, fittings, and chlorine solution.

1.3 CLOSEOUT SUBMITTALS

.1 Submit laboratory water purity test results indicating chlorine residual prior to application for Substantial Performance of the Work.

.2 Prior Substantial Performance of the Work, submit a minimum of 3 identified keys for key operated hydrants.

PART 2 - PRODUCTS

2.1 PIPE, FITTINGS, AND JOINTS

.1 Copper - Solder Joint

.1 Type "L" hard drawn seamless copper to ASTM B88, complete with copper solder type fittings to ASME/ANSI B16.18 and soldered joints using The Canada Metal Co. Ltd. "SILVABRITE 100" or equal lead-free solder for cold water pipe, and 95% tin / 5% Antimony or "SILVABRITE 100" solder for other services.

2.2 SHUT-OFF VALVES

.1 Ball Valves

.1 Class 600, 4140 kPa (600 psi) WOG rated, lead-free, full port ball type valves, each complete with a forged brass body with solder ends, forged brass cap, blowout-proof stem, 304 stainless steel ball, "Teflon" or "PTFE" seat, and a removable lever handle. Valves in insulated piping are to be complete with stem extensions.

.2 Manufacturers:

.1 Toyo Valve Co.

.2 Milwaukee Valve Co.

.3 Kitz Corporation.

.4 Apollo Valves.

.5 Watts Industries (Canada) Inc.

.2 Butterfly Valves – Grooved End

.1 Equal to Victaulic Series 608N, for copper pipe rated to 300 psi and be both bi-directional and dead-end service capable to full rated pressure. Seat material shall be EPDM UL Classified in accordance with ANSI/NSF 61 for ambient +86°F and hot +180°F potable water service and ANSI/NSF 372.

.2 Victaulic Series 461, for stainless steel pipe rated to 300 psi and be both bi-directional and dead-end service capable to full rated pressure. Seat material shall be EPDM UL Classified in accordance with ANSI/NSF 61 for ambient +86°F and hot +180°F potable water service and ANSI/NSF 372.

2.3 CHECK VALVES

.1 Horizontal

.1 Lead-free, Class 125, bronze, 1380 kPa (200 psi) WOG rated horizontal swing type check valves with solder ends.

.2 Manufacturers:

.1 Toyo Valve Co. Fig. 237A-LF;

.2 Milwaukee Valve Co. #UP1509;

.3 Kitz Corporation Code 823;

.4 Apollo Valves #61LF Series.

.2 Vertical

.1 Equal to Kitz Corp. Code 826, lead-free, 1725 kPa (250 psi) WOG rated vertical lift check valve with soldering ends.

2.4 DRAIN VALVES

.1 Minimum 2070 kPa (300 psi) water rated, 20 mm (¾") dia., straight pattern full port bronze ball valves, each complete with a threaded outlet suitable for coupling connection of 20 mm (¾") dia. garden hose, and a cap and chain. Ball material to be 304 stainless steel.

.2 Manufacturers:

.1 Toyo Valve Co.

.2 Dahl Brothers Canada Ltd.

.3 Kitz Corporation.

.4 Apollo Valves.

.5 Watts Industries (Canada) Inc.

2.5 DOMESTIC HOT WATER PIPING BALANCING VALVES

.1 Equal to Victaulic Series 76X Low Lead Balancing Valve, lead-free and compliant with NSF-61 and NSF-372 for use in potable water applications, automatic flow limiting balancing valve (+/-5% over rated operating pressure range), complete with removable flow cartridge.

.2 Equal to Victaulic TA Series 78BL, solder or flange end type as required, ball valve style, lead-free and compliant with NSF-61 and NSF-372 for use in potable water applications, circuit balancing valves designed to facilitate precise flow measurement, precision flow balancing, and positive shut-

off, complete with capped and valved drain connection, and valved ports for connection to a differential pressure meter.

2.6 PRESSURE REDUCING VALVES

.1 For piping less than or equal to 50 mm (2") diameter, lead-free, non-corrosive, non-ferrous direct spring acting pressure reducing valves to CAN/CSA B356, each factory set at 345 kPa (50 psi) unless otherwise specified or required, each field adjustable from 175 kPa (25 psi) to 520 kPa (75 psi) and each complete with an integral inlet strainer.

.1 Manufacturers:

.1 Apollo Valves #36HLF Series;

.2 Zurn/Wilkins #600XL Series;

.3 Watts Industries (Canada) Inc. #LF25AUB-Z3 Series;

.4 Cash-Acme EB-25 Series;

.5 Bermad Series 935-H.

.2 For piping greater than or equal to 65 mm (2-½") diameter, lead-free, non-corrosive pilot operated pressure reducing valve to CAN/CSA B356, factory set at required pressure, field adjustable, and complete with screwed or flanged connections, and brass body pilot valve with stainless steel seat.

.1 Manufacturers:

.1 Singer Valve #106 PR;

.2 Zurn/Wilkins #ZW209;

.3 Watts Industries (Canada) Inc. #LFM115 Series;

.4 Bermad Series 972.

2.7 CHLORINE

.1 Sodium hypochlorite to AWWA B300.

2.8 FLOOR DRAIN TRAP SEAL PRIMERS

.1 Primer Valve Type

.1 Precision Plumbing Products Inc. Model P2-500 trap primer valve, constructed of brass, adjustable to high or low water pressures and complete with "O" ring seals, 12 mm (½") threaded inlet and outlet connections, and, for priming two traps from the same primer, a DU-2 dual outlet distribution unit.

.2 Primer Valve Type with Manifold

.1 Precision Plumbing Products Inc. Model P1-500 trap primer valve constructed as specified above for the Model P2-500 primer valve, complete with a Model DU-3 or DU-4, 3 or 4 outlet distribution unit for priming 3 or 4 traps, and at Model "YS-8" supply tube with combinations of Model DU-3 and DU-4 distribution units for priming from 5 to 6 traps.

.3 Electronic Type

.1 Precision Plumbing Products #PT Series surface wall mounting, CSA certified, 115 volt, 1-phase, 60 Hz., electronic, automatic trap priming manifolds, each sized to suit the number of drain traps or interceptors serviced, and each complete with:

.1 galvanized steel cabinet with door;

.2 20 mm (¾") dia. NPT copper pipe inlet with shut-off valve and water hammer arrestor;

.3 solenoid valve, an atmospheric vacuum breaker, and a discharge manifold with 12 mm (½") dia. compression type copper tube connections on 40 mm (1-½") centres with quantity to suit the number of items to be primed;

.4 control panel with circuit breaker, 5 ampere fuse, 24 hour timer, and manual override toggle switch.

2.9 SHOCK ABSORBERS

.1 Type 304 stainless steel piping shock absorbers, each complete with a nesting type bellows and a casing of sufficient displacement volume to dissipate kinetic energy generated in piping system, and each sized to suit connecting water pipe and equipment it is provided for.

.2 Manufacturers:

.1 Watts Industries (Canada) Inc. "SG" Series.

.2 Jay R. Smith 5000 Series "HYDROTROL";

.3 Zurn #Z1700 "SHOKTROL";

.4 Mifab "HAMMERGUARD" WHB Series;

2.10 WATER HAMMER ARRESTORS

.1 Piston type, sealed, all stainless steel construction, pressurized water hammer arrestors suitable for either vertical or horizontal installation, each complete with a pressurized compression chamber, welded nesting-type expansion bellows surrounded by non-toxic mineral oil, and a male treaded nipple connection.

.2 Manufacturers:

.1 Jay R. Smith 5000 Series;

.2 Precision Plumbing Products "SS" Series.

2.11 BACKFLOW PREVENTERS

.1 Reduced Pressure Zone Assembly

.1 Lead-free reduced pressure zone assembly backflow preventer in accordance with CAN/CSA B64 (including supplements), each of bronze or epoxy coated cast iron bronze fitted construction depending on size, and complete with inlet strainer, inlet and outlet shut-off valves, an intermediate relief valve, ball valve type test cocks, and a proper air gap fitting.

.2 Manufacturers:

.1 Watts Industries #LF009QT-S for 12 mm (½") size, #LF909QT-S for 20 mm to 50 mm (¾" to 2") size, and #LF909-NRS-S for 65 mm (2-½") and larger size;

.2 Zurn/Wilkins 975XL2 and 375 Series;

.3 “Apollo” Valves manufactured by Conbraco Industries Inc. Series 4ALF;

.4 Danfoss Flomatic Corp. Series RPZ.

2.12 PIPING EXPANSION COMPENSATORS AND GUIDES

.1 Pressurized type, selected to withstand system pressure and to suit calculated movement from -5°C (23°F) to maximum operating temperature plus 25% safety factor, complete with stainless steel bellows and shroud, copper tube sweat type female ends, anti-torque device, and proper and suitable alignment guides for both sides of each compensator.

.2 Manufacturers:

.1 Senior Flexonics Series HB;

.2 Hyspan Precision Products Series 8500.

2.13 PIPE ANCHORS

.1 Welded structural black steel anchors of a design, size, and type to securely anchor pipe at point shown. Each anchor is to withstand 150% axial thrust, and is to be designed and detailed by a professional structural engineer registered and licensed in jurisdiction of the work. Submit anchor design and fabrication shop drawings, stamped by design engineer.

2.14 AIR VENTS

.1 Equal to ITT Hoffman Specialty No. 78 cast brass, 1035 kPa (150 psi) rated, 20 mm (¾") straight water main vent valves, each tapped at the top for a 3.2 mm (1/8") safety drain connection.

2.15 DOMESTIC WATER THERMAL EXPANSION TANK

.1 Pre-charged domestic water thermal expansion tank in accordance with Section VIII of the ASME Boiler and Pressure Code, carbon steel outer shell construction and complete with fixed butyl rubber bladder to prevent water from contacting shell interior, top NPT stainless steel system connection, 7.6 mm to 813 mm (0.301" to 32") charging valve connection and prime painted exterior.

.2 Manufacturers:

.1 Watts Industries (Canada) Inc. Series DETA;

.2 Zurn/Wilkins Model WTTA.

.3 Amtrol.

PART 3 - EXECUTION

3.1 DEMOLITION

.1 Refer to demolition requirements specified in Section 20 05 05 – Selective Demolition for Mechanical.

3.2 PIPING INSTALLATION REQUIREMENTS

.1 Provide required domestic water piping.

.2 Piping, unless otherwise specified, is as follows:

.1 for pipe inside building and aboveground in sizes to 100 mm (4") dia. – Type "L" hard copper with solder joints.

.3 Slope piping so it can be completely drained.

.4 Provide cast brass dielectric type adapters/unions at connections between ferrous and copper pipe or equipment.

3.3 INSTALLATION OF SHUT-OFF AND CHECK VALVES

.1 Refer to Part 3 of Section 20 05 00 – Common Work Results for Mechanical.

.2 For shut off valves installed on solder joint copper piping up to and including 75 mm (3") diameter, provide ball type valves, and for flanged joints copper or stainless steel piping larger than 75 mm (3") diameter provide butterfly type valves.

3.4 INSTALLATION OF DRAIN VALVES

.1 Provide a drain valve at the bottom of domestic water piping risers, at other piping low points, and wherever else shown.

.2 Locate drain valves so they are easily accessible.

3.5 INSTALLATION OF DOMESTIC HOT WATER PIPING BALANCING VALVES

.1 Provide balancing valves in domestic hot water recirculation piping where shown or required.

.1 for pipe 25 mm (3/4”) dia. and less ground – equal to Victaulic Series 76X

.2 for pipe greater than 25 mm (3/4”) dia. – equal to Victaulic TA Series 78BL

.2 Locate each valve so it is easily accessible.

3.6 INSTALLATION OF PRESSURE REDUCING VALVES

.1 Provide domestic water pressure reducing valves. Install so each valve is readily accessible. Whenever possible, provide pressure reducing valves factory pre-set to required pressures.

.2 Check and test operation, and adjust as required.

3.7 INSTALLATION OF TRAP SEAL PRIMERS

.1 Provide required accessible trap seal primers to automatically maintain a water seal in floor drain traps, whether shown on drawings or not.

.2 Water closet flush valves may be used for priming washroom floor drain traps if flush tube is properly tapped and primer tubing exposed in washroom is chrome plated.

.3 Provide trap primer valves to prime single or multiple (1 to 6) traps. Install trap primer valves in domestic cold water piping to frequently used plumbing fixtures. Where from 2 to 6 traps are to be primed from same primer valve, provide appropriate supply and distribution tube assemblies. Ensure primer valves are accessible.

.4 Provide 115 volt, electronic, surface wall mounting trap primer assemblies for multiple (4 to 30) traps. Include for a 115 volt 15 ampere panel breaker and wiring in conduit from closest panelboards to primer assembly, all to wiring standards of Electrical Division. Adjust primer water flow and timing to suit number of traps served.

.5 Ensure trap primer piping is secured to floor drain primer tappings and not terminated through the tapping in the throat of the drain.

3.8 INSTALLATION OF SHOCK ABSORBERS

.1 Provide accessible shock absorbers in make-up water piping to equipment.

.2 Ensure size of each shock absorber is properly selected to suit size of water pipe and equipment pipe is connected to.

.3 Install down stream of backflow preventor.

3.9 INSTALLATION OF WATER HAMMER ARRESTORS

.1 Provide accessible water hammer arrestors in domestic water piping in locations as follows:

.1 in headers at groups of plumbing fixtures;

.2 at top of risers;

.3 at ends of long horizontal runs of piping;

.4 in piping connecting solenoid valves or equipment with integral solenoid valves;

.5 wherever else shown or required by Code.

.2 Install each unit in a piping tee either horizontally or vertically in the path of potential water shock in accordance with manufacturer's instructions and details.

3.10 INSTALLATION OF BACKFLOW PREVENTERS

.1 Provide a reduced pressure zone assembly backflow preventer on incoming DCW service and in each direct domestic water connection to equipment other than plumbing fixtures and fittings.

.2 Provide a double check valve assembly backflow preventer on incoming DCW service. Provide a reduced pressure zone assembly backflow preventer in each direct domestic water connection to equipment other than plumbing fixtures and fittings.

.3 Locate each backflow preventer on floor or wall between 765 mm (30") and maximum 1.5 m (60") above floor such that it is easily accessible for maintenance and testing.

.4 Equip each reduced pressure zone backflow preventer with an air gap fitting and pipe the reduced pressure zone water outlet to drain.

.5 Test operation of each backflow preventer in accordance with requirements of CAN/CSA B64 by personnel certified for such testing by governing authorities, and submit signed test results and a properly and clearly identified and marked inspection and test record card for each backflow preventer.

3.11 INSTALLATION OF EXPANSION COMPENSATORS, GUIDES, AND ANCHORS

.1 Provide expansion compensators in domestic water piping.

.2 Ensure pipe ends are properly aligned. Provide alignment guides on each side of expansion compensators, properly secured to building structure.

.3 Provide anchors to secure domestic water piping to structure. Locate anchors generally where shown but with exact locations to suit piping as installed and requirements of reviewed anchor shop drawings.

.4 When installation of anchors is complete, arrange, and pay for anchor design engineer to visit site to review anchor installation. Submit a letter from design engineer confirming each anchor is properly installed.

3.12 INSTALLATION OF AIR VENTS

.1 Provide accessible air vents in domestic water piping to prevent air binding.

.2 Extend copper indirect drain piping from top drain connection of each vent to nearest suitable drain.

.3 Locate exact vent locations on as-built record drawings.

3.13 INSTALLATION OF DOMESTIC WATER THERMAL EXPANSION TANKS

.1 Provide domestic water thermal expansion tanks.

.2 Unless otherwise specified, mount at least 450 mm (18") from cold water inlet to domestic water heater.

.3 Adjust pre-charge to match incoming water pressure after installation.

.4 Install in accordance with manufacturer's instructions and as per local governing Codes and Regulations.

3.14 FLUSHING AND DISINFECTING PIPING

.1 Flush and disinfect all new and/or reworked domestic water piping after leakage testing is complete.

.2 Isolate new piping from existing piping prior to flushing and disinfecting procedures.

.3 Flush piping until all foreign materials have been removed and flushed water is clear. Provide connections and pumps as required. Open and close valves, faucets, hose outlets, and service connections to ensure thorough flushing.

.4 When flushing is complete, disinfect the piping with a solution of chlorine in accordance with AWWA C601.

.5 When disinfecting is complete, submit water samples to a certified laboratory for purity testing and, when testing indicates pure water in accordance with governing standards, submit a copy of test results and fill the systems.

END OF SECTION

PART 1 - GENERAL

1.1 SUBMITTALS

.1 Submit shop drawings/product data sheets for all products specified in this Section except pipe and fittings.

1.2 CLOSEOUT SUBMITTALS

.1 Submit a copy of plumbing inspection certificate prior to application for Substantial Performance of the Work.

PART 2 - PRODUCTS

2.1 PIPE, FITTINGS, AND JOINTS

.1 PVC - DWV

.1 For High Buildings and Plenums: Equal to IPEX System XFR drain, waste and vent pipe and fittings to CAN/CSA B181.2, complete with a flame spread rating not more than 25 and a smoke developed classification not more than 50 when tested to CAN/ULC S102.2, with solvent weld joints or MJ Grey mechanical joint couplings, and, for fire barrier penetration, approved firestop conforming to CAN/ULC S115.

.2 Copper - Solder Joint

.1 Type DWV hard temper to ASTM B306, with forged copper solder type drainage fittings and 50% lead - 50% tin solder joints.

.3 Cast Iron

.1 Class 4000 cast iron pipe, fittings, and mechanical coupling joints to CAN/CSA B70.

.4 Copper-Victaulic Coupling Joint

.1 Type DWV hard temper to ASTM B306, with factory or site rolled grooved ends (with grooving rolls designed for copper) and Victaulic "Copper Connection" wrought copper or cast bronze fittings and Style 606 gasket type couplings.

2.2 CLEANOUTS

.1 Horizontal Piping

.1 TY pipe fitting with an extra heavy brass plug screwed into the fitting.

.2 Vertical Piping

.1 Bronze or copper cleanout tees in copper piping, each complete with a bronze ferrule, and, for cast iron piping, "BARRETT" type cast iron cleanout tees, each gas and water-tight and complete with a bolted cover.

2.3 FLOOR CLEANOUT TERMINATIONS

.1 Factory finished cast iron terminations, each adjustable and complete with a cast iron body with neoprene sleeve, solid, gasketed, polished nickel-bronze scoriated top access cover to suit floor finish, a seal plug, and captive, vandal-proof, stainless steel securing hardware.

.2 Manufacturers:

.1 Watts Industries (Canada) Ltd. # CO-200-R-1.

.2 Jay R. Smith #4020-F-C Series;

.3 Zurn # ZN-1602-SP Series;

.4 Mifab # C1100-XR-1 or #C1000-R-3;

.3 Cleanout terminations in areas with a tile or sheet vinyl floor finish are to be as above but with a square top in lieu of a round top.

2.4 FLOOR DRAINS, FUNNEL FLOOR DRAINS, AND HUB DRAINS

.1 Unless otherwise specified or indicated, floor drains are to be vandal-proof drains in accordance with drawing symbol list, each complete with a cast iron body and a trap seal primer connection. Cast iron components are to be factory finished with latex based paint coating.

.2 Floor drains in areas with a tile or sheet vinyl floor finish are to be as above but with a square grate in lieu of a round grate.

.3 Manufacturers:

.1 Watts Industries (Canada) Ltd.;

.2 Jay R. Smith Manufacturing Co.;

.3 Zurn Industries Ltd.;

.4 Mifab Inc.

PART 3 - EXECUTION

3.1 DEMOLITION

.1 Refer to demolition requirements specified in Section 20 05 05 – Selective Demolition for Mechanical.

3.2 DRAIN AND VENT PIPING INSTALLATION REQUIREMENTS

.1 Provide required drainage and vent piping. Pipe, unless otherwise specified, as follows:

.1 for pipe inside building and aboveground in sizes less than or equal to 65 mm (2-½") dia. – type DWV copper;

.2 for pipe inside building and aboveground in sizes greater than or equal to 75 mm (3") dia. – Class 4000 cast iron;

.3 for pipe inside building and aboveground in lieu of type DWV copper and cast iron, at your option and where permitted by governing Codes and Regulations – rigid PVC DWV;

.4 for drainage pump discharge pipe connections from pump to and including shut-off and check valve connections – Type "DWV" copper with Victaulic "Copper Connection" fittings and couplings, or Schedule 40 galvanized steel with Victaulic fittings and couplings.

.2 Unless otherwise specified, slope horizontal drainage piping aboveground in sizes to and including 75 mm (3") dia. 25 mm (1") in 1.2 m (4'), and pipe 100 mm (4") dia. and larger 25 mm (1") in 2.4 m (8').

.3 Unless otherwise specified, slope horizontal branches of vent piping down to fixture or pipe to which they connect with a minimum pitch of 25 mm (1") in 1.2 m (4').

.4 Provide cast brass dielectric unions at connections between copper pipe and ferrous pipe or equipment.

3.3 INSTALLATION OF CLEANOUTS

.1 Provide cleanouts in drainage piping in locations as follows:

.1 in building drain or drains as close as possible to inner face of outside wall, and, if a building trap is installed, locate cleanout on downstream side of building trap;

.2 at or as close as practicable to the foot of each drainage stack;

.3 at maximum 15 m (50') intervals in horizontal pipe 100 mm (4") dia. and smaller;

.4 at maximum 30 m (100') intervals in horizontal pipe larger than 100 mm (4") dia.;

.5 wherever else shown on drawings.

.2 Cleanouts are to be same diameter as pipe in piping to 100 mm (4") dia., and not less than 100 mm (4") dia. in piping larger than 100 mm (4") dia.

.3 Where cleanouts in vertical piping are concealed behind walls or partitions, install cleanouts near floor and so cover is within 25 mm (1") of the finished face of the wall or partition.

3.4 INSTALLATION OF FLOOR CLEANOUT TERMINATIONS

.1 Where cleanouts occur in horizontal inaccessible underground piping, extend cleanout TY fitting up to floor, and provide a cleanout termination set flush with finished floor.

.2 In waterproof floors, ensure each cleanout termination is equipped with a flashing clamp device. Cleanout terminations are to suit floor finish.

.3 Where cleanout terminations occur in finished areas, confirm locations prior to rough-in and arrange piping to suit.

.4 Ensure cleanout termination covers in tiled floor are square in lieu of round.

3.5 INSTALLATION OF FLOOR DRAINS, FUNNEL FLOOR DRAINS AND HUB DRAINS

.1 Provide floor drains, funnel floor drains and hub drains.

.2 Coordinate location of floor drains, funnel floor drains and hub drains with equipment provided by Mechanical Division and Owner's supplied equipment. Install in accordance with manufacturer's instructions.

.3 Equip each drain with a trap.

.4 In equipment rooms and similar areas, exactly locate floor drains to suit location of mechanical equipment and equipment indirect drainage piping. In washrooms, exactly locate floor drains to avoid interference with toilet partitions.

.5 Confirm exact location of drains prior to roughing in. Where floor drains occur in washrooms coordinate locations with toilet partition installations.

.6 Temporarily plug and cover floor drains during construction procedures. Remove plugs and covers during final clean-up work and when requested, demonstrate free and clear operation of each drain. Replace any damaged grates, and refinish any areas of the drain where cast iron finish has been damaged or removed, including rusted areas.

END OF SECTION

PART 1 - GENERAL

1.1 SECTION INCLUDES

.1 Plumbing fixtures and related components.

1.2 SUBMITTALS

.1 Submit product data sheets (fixture cuts) for all plumbing fixtures and fittings, including accessories.

.2 Product Data: Include selected fixture and trim, fittings, accessories, appliances, appurtenances, equipment, and supports and indicate materials and finishes, dimensions, construction details, and flow-control rates for each type of fixture indicated.

.3 Wiring Diagrams: Power, signal, and control wiring.

.4 Submit fixture manufacturer’s standard colour charts for all fixtures where colours are available but a particular colour is not specified.

1.3 CLOSEOUT SUBMITTALS

.1 Operation and maintenance data.

PART 2 - PRODUCTS

2.1 GENERAL RE: PLUMBING FIXTURES AND FITTINGS

.1 Fixtures and fittings, where applicable, are to be in accordance with requirements of CAN/CSA-B45 Series, General Requirements for Plumbing Fixtures, including supplements, ASME A112.1.18.1/CSA B125.1, Plumbing Supply Fittings, and CAN/CSA-B125.3, Plumbing Fittings.

.2 Barrier-free fixtures and fittings are to be in accordance with governing Code requirements.

.3 Unless otherwise specified, vitreous china, porcelain enamelled, and acrylic finished fixtures are to be white.

.4 Unless otherwise specified, toilet seats are to be constructed with an anti-microbial compound to inhibit growth of bacteria on seat surface.

.5 Unless otherwise specified, fittings and piping exposed to view are to be brass, chrome plated and polished.

.6 Fittings located in areas other than private washrooms are to be vandal-resistant.

.7 Fixture carriers are to be suitable in all respects for the fixture they support and construction in which they are located.

.8 Floor flanges for floor mounted water closets are to be cast iron or brass, secured to floor to prevent movement and complete with a wax seal and brass or stainless steel bolts, nuts, and washers. Plastic floor flanges will not be acceptable.

.9 Proper seal to mate with fixture carrier flange and produce a water-tight installation.

.10 Exposed traps for fixtures not equipped with integral traps, such as lavatories, are to be adjustable chrome plated cast brass "P" traps with cleanouts, minimum #17 gauge chrome plated tubular extensions, and chrome plated escutcheons, all to suit fixture type and drain connection.

.11 Concealed traps for fixtures not equipped with integral traps, such as counter sinks, are to adjustable cast brass with cleanout plugs, all to suit fixture type and drain connection.

.12 Exposed supplies for fixtures which do not have supply trim/fittings with integral stops, i.e. lavatories, are to be solid chrome plated brass angle vales with screwdriver stops for public areas,

wheel handle stops for private areas, flexible stainless steel risers, and stainless steel or chrome plated steel escutcheons, all arranged and sized to suit fixture.

.13 Water piping as specified, complete with ball type shut-off valves as specified with water piping or Dahl Bros. Canada Ltd. ¼ turn Mini Ball Valves.

2.2 PLUMBING FIXTURES AND FITTINGS

.1 Plumbing fixtures and fittings are to be in accordance with following:

.1 S-1 - Wall Hung Basin with Electronic “No Touch” Faucet

.1 American Standard ICU Basin #9118.111.020, vitreous china with EverClean antimicrobial surface which inhibits the growth of stain and odor causing bacteria mold and mildew, sealed overflow , 65 mm (2-9/16") dia. Faucet perch, back of sink 93 mm (3-11/16") higher than faucet perch, offset grid drain included, integrated mounting brackets, p-trap with Saniguard coating provided.

.2 American Standard Selectronic #605B.193.002 Electronic 'No-Touch' Hard Wired - Plug-in faucet, chrome plated brass, 5.7 LPM (1.5 GPM) pressure compensating, laminar flow device in base of spout, 152 mm (6") rigid/swing gooseneck spout, infrared sensor, below deck solenoid valve with serviceable strainer filter, module control assembly with splash-proof junction box and mounting kit, below deck.

.3 American Standard hard-wired AC power supply #M950520-0070A, hard wired Transformer, 80-250 VAC/ 6 VDC.

.4 American Standard #605XTMV1070, point of use thermostatic water mixing valve, bronze body, temperature adjustment by using a hex wrench, 10 mm (3/8") inlets compression fittings with stainless steel 508 mm (20") flexible hoses and 13 mm (1/2") MNPT outlet connection, built-in checks, housed in 127 mm x 86 mm x 81 mm (5" x 3-3/8" x 3-3/16") enclosure. Set valve temperature at 46°C (114.8°F). Provide tee, adaptors and flex. copper tubing to suit installation.

.5 McGuire #LFH165LKN3, chrome plated polished brass faucet supplies, heavy duty angle stops, 10 mm (3/8") I.P.S. Inlet x 76 mm (3") long rigid horizontal nipples, V.P. loose keys, escutcheons and flexible copper riser.

.6 Watts #CA-311 Carrier, mounted on concrete floor, universal steel hangar support plates with integral mounting brackets, heavy gauge epoxy coated steel offset uprights with welded feet, plated hardware.

.7 Provide P-Trap, same material as the connecting pipe drain.

.2 EW-1 Eye/Face Wash

.1 Haws #7360B-7460B, wall hung, eye/face wash, stainless steel bowl, single inverted directional laminar flow head with integral flow control, chrome plated brass stay open ball valve with stainless steel ball and stem, in-line mesh water strainer, flow rate of 24 LPM (6.34 GPM), 32 mm (1-1/4") waste, universal sign.

.2 McGuire #8872C, P-Trap, 32 mm (1-1/4") size, shallow wall flange and seamless tubular wall bend.

.3 Haws Model 9201EW Axion Thermostatic Mixing Valve: Emergency tempering valve, flow rate of 10 gpm (38.8 L).

.4 Haws #9201-REC Recessed Cabinet: 18 gauge Type 304 Stainless Steel, locking door, heavy duty stainless steel piano hinge, removable upper and lower panels to accommodate thermostatic mixing valve.

2.3 MANUFACTURERS

.1 Subject to compliance with requirements, manufacturers that may be incorporated into the Work include, but are not limited to, following:

.1 Flush Valves:

.1 Sloan;

.2 Delta Commercial;

.3 Zurn Industries.

.2 Plumbing Brass:

.1 Sloan;

.2 Acorn Engineering;

.3 American Standard;

.4 Delta Commercial;

.5 Chicago Faucet.

.3 Stainless Steel Sinks:

.1 Franke Commercial;

.2 Novanni Commercial;

.3 Aristaline;

.4 Arch Metal Ind.

.4 Mop Sinks:

.1 Stern Williams;

.2 Acorn Engineering;

.3 Zurn Industries.

.5 Emergency Eye Wash and Emergency Showers:

.1 Haws;

.2 Speakman;

.3 Guardian;

.4 Bradley.

.6 Bariatric Water Closets:

.1 Jay R. Smith;

.2 Acorn Engineering;

.3 Zurn Industries.

.7 Drain Fittings, Angle Supplies, and Traps:

.1 McGuire;

.2 American Standard;

.3 Delta Commercial;

.4 Zurn Industries.

.8 Fixture Carriers:

.1 Watts Industries;

.2 Jay R. Smith;

.3 Zurn Industries.

.9 Surgeon Scrub Sinks:

.1 Franke Commercial;

.2 Acorn Engineering.

.10 Hose Bibbs:

.1 Jay R. Smith;

.2 Zurn Industries.

.11 Water Closets, Lavatories, and Urinal:

.1 American Standard;

.2 Zurn Industries;

.3 Kohler.

.12 Thermostatic Mixing Valves:

.1 Lawler;

.2 Delta Commercial;

.3 Leonard.

.13 Shower and Associated Trim:

.1 American Standard;

.2 Delta Commercial;

.3 Zurn Industries.

.14 Toilet Seats:

.1 Olsonite;

.2 Centoco;

.3 Bemis Commercial.

.15 Electronic “No Touch” Flush Valves:

.1 Sloan;

.2 Delta Commerical;

.3 Zurn Industries.

.16 Electronic “No Touch” Faucets:

.1 Sloan;

.2 Delta Commercial;

.3 Zurn Industries.

2.4 CAULKING

.1 General Electric Series SCS-1200 Silicone Construction Sealant or Dow Corning 780 silicone rubber sealant with primers as recommended by sealant manufacturer. Caulking colour(s) for coloured fixtures other than white, if any, will be selected by Consultant from sealant manufacturer's standard colour range.

.2 Caulking in Mental Health areas shall be pick proof.

PART 3 - EXECUTION

3.1 DEMOLITION

.1 Refer to demolition requirements specified in Section 20 05 05 – Selective Demolition for Mechanical.

3.2 INSTALLATION OF PLUMBING FIXTURES AND FITTINGS

.1 Provide required plumbing fixtures and fittings.

.2 Where new fixtures and fittings are to be connected to existing piping, include for required piping revisions.

.3 Connect plumbing fixtures and fittings with piping sized in accordance with drawing schedule. Refer to manufacturer's published connection (rough-in) requirements. Where manufacturer requires piping connection larger than shown below, provide piping accordingly:

Fixture and/or Fitting	Drain Size mm (in)	Vent Size mm (in)	DHW size mm (in)	DCW size mm (in)	Temp Water Size mm (in)
Water Closets Flush Valve Type	100 (4)	38 (1-½)	-	25 (1)	-
Urinals	75 (3)	38 (1-½)	-	25 (1)	-
Lavatories	32 (1-¼)	32 (1-¼)	12 (½)	12 (½)	-
Lavatories (Electronic Faucet)	32 (1-¼)	32 (1-¼)	12 (½)	12 (½)	12 (½)
Counter Sinks	38 (1-½)	32 (1-¼)	12 (½)	12 (½)	-
Shower Valves and Heads	-	-	12 (½)	12 (½)	12 (½)
Shower Stalls	50 (2)	38 (1-½)	12 (½)	12 (½)	12 (½)
Prefab. Mop Sinks with Drain	75 (3)	38 (1-½)	20 (¾)	20 (¾)	-
Surgeon Scrub Sinks	38 (1-½)	32 (1-¼)	20 (¾)	20 (¾)	-
Emergency Eye Wash	-	-	-	-	12 (½)
Emergency Showers	-	-	-	-	25 (1)

Fixture and/or Fitting	Drain Size mm (in)	Vent Size mm (in)	DHW size mm (in)	DCW size mm (in)	Temp Water Size mm (in)
Clinic Service Sinks	100 (4)	38 (1-½)	12 (½)	1 @ 25 (1) 1@ 12 (½)	-

.4 Confirm exact location of plumbing fixtures and trim prior to roughing-in. Refer to architectural plan and elevation drawings.

.5 When installation is complete, check and test operation of each fixture and fitting. Adjust or repair as required.

.6 For barrier-free fixtures, comply with mounting height and other requirements of governing Code(s).

.7 For barrier-free water closets utilizing manual flush controls, controls to be installed so that it is operable from the transfer side of the fixture.

.8 Supply templates for counter mounted fixtures and trim and hand to trades who will cut the counter. Ensure openings in counter are properly located.

.9 Locate control panels for electronic faucets under lavatories and recessed into wall. Coordinate panel installations with electrical trade who will provide 115 volt power wiring to panels. Install flexible conduit (supplied with box) and extend cord from faucet through the flexible conduit to control box. Connect hot and cold water piping to mixing valve in each box, and tempered water piping from each mixing valve to faucet. Set mixing valve maximum temperature limit stops to 43°C (110°F) after domestic water systems (hot and cold) are complete. Ensure each programmable controller is properly programmed and water off after deactivation is set for 3 seconds.

.10 For electronic flush valves, locate transformer in ceiling space above electronic units to be served. Coordinate locations with electrical trade who will provide 120 volt line supply to transformers. Provide low voltage wiring from transformers to each electronic flush valve terminal point. Electrical line supply and low voltage wiring is to be concealed and access to transformer must be provided for servicing.

.11 Protect baths from damage during construction and finishing work. Unless otherwise specified, pack concealed voids under baths with batt type glass fibre insulation as baths are installed.

.12 Protect shower bases from damage during construction and finishing work.

.13 Confirm exact mixing valve and shower head locations prior to roughing-in.

.14 Install refrigerated drinking fountains in accordance with manufacturer’s instructions. Plug into a wall receptacle provided as part of electrical work. Coordinate receptacle installation with electrical trade on site.

.15 For emergency showers, install so bottom of shower head is approximately 2 m (82") above floor, and approximately 400 mm (16") out from wall. Wall mount mixing valve approximately 1.5 m (5') above floor and adjacent shower head. Set valve temperature limit stop to 35°C (95°F). Ensure valve is open, and exposed piping is chrome plated or stainless steel.

.16 Install eye wash fixtures in accordance with manufacturer’s instructions. Ensure exposed piping is painted.

.17 Wall mount mixing valves for emergency fixtures approximately 1.5 m (5') above floor and secure in place. Check and confirm valve operation and temperature of tempered water supply. Provide cabinets where shown. Identify each cabinet and hand 3 identified cabinet keys to Consultant prior to Substantial Performance of the Work.

.18 Set mop service basins on floor over drain piping and connect to roughed-in service. Install wall supply trim and any accessories specified.

3.3 CAULKING AT PLUMBING FIXTURES AND FITTINGS

.1 Caulk around plumbing fixtures and fittings where they contact walls, floors, and any other building surface.

.2 Clean areas/surfaces to be caulked and prime in accordance with sealant manufacturer's instructions. Where damage to a building surface may occur, mask surface to prevent damage and ensure a clean exact edge to caulking bead.

.3 Apply caulking using a gun with proper size and shape of nozzle and force sealant into joints to ensure good surface contact and a smooth and even finished bead of sealant.

.4 If joints have been masked sealant may be tooled in a continuous stroke to obtain complete void filling. Remove masking tape immediately after tooling and before sealant begins to skin.

END OF SECTION

PART 1 - GENERAL

1.1 SUBMITTALS

.1 Submit shop drawings/product data sheets for all products specified in this section except pipe and fittings. Appropriate CRN assigned to each component is to be clearly indicated on component shop drawing/product data sheet.

.2 Submit product data sheets for motors, and certified wiring diagrams for equipment requiring power, control and/or alarm wiring connections.

.3 Submit, prior to work commencing on site, a detailed account of your proposed pipe joint brazing procedures including pre and post nitrogen purging.

1.2 CLOSEOUT SUBMITTALS

.1 Prior to Substantial Performance of the Work, submit 5 identified replacement filters for each type of filter for equipment that requires a replaceable filter.

.2 Submit written certification by equipment manufacturers/suppliers confirming that equipment is properly installed, has been tested, and is in proper operating condition, all as specified in Part 3 of this section.

.3 Submit manufacturer's start-up reports as specified in Part 3 of this section.

.4 For each zone valve box assembly and combination zone valve box and alarm, submit for review a typed list of rooms and areas with medical gas terminal units controlled by the zone valves.

.5 Record drawings: indicate as-constructed location of all piping governed by this Section.

.6 Training attendance records.

1.3 MAINTENANCE MATERIAL SUBMITTALS

.1 Submit 3 identified keys for cabinet/panel lockable doors prior to Substantial Performance of the Work.

1.4 DESIGN PRESSURE AND TEMPERATURE REQUIREMENTS

.1 System design pressures are as follows:

.1 oxygen, carbon dioxide, nitrous oxide, medical air:

.1 maximum system pressure, 380 kPa (55 psi);

.2 maximum pressure at terminal unit, 345 kPa (50 psi).

.2 nitrogen:

.1 maximum system pressure, 1400 kPa (200 psi).

.3 vacuum:

.1 maximum system vacuum, 54 kPa (15.94" Hg);

.2 maximum vacuum at terminal unit, 68 kPa (20.08" Hg).

.2 Design temperature for all services will be ambient temperature.

1.5 QUALITY ASSURANCE

.1 Products and work must comply in all respects with requirements of CAN/CSA Z7396.1 and related Standards, and, where applicable, requirements of local governing authorities.

.2 Contractor is responsible for registration, inspection, and/or approval for medical gas system work, as required, with local regulatory authority.

.3 Medical gas systems work must be performed by journeyman plumber / pipefitter / steamfitter tradesmen completely familiar with requirements of CAN/CSA Z7396.1, and who are qualified and certified (with jurisdictional authority issued Certificate) for silver brazing with nitrogen backing without using flux in accordance with Clause 4.5 in Part 1 of CSA B51. Jurisdictional authority is the authority designated by the province of the work to perform oversight functions cited in Clause 4.5 in Part 1 of CSA B51.

.4 Consultant reserves the right to ask for and review the Certificate of any tradesman, and only tradesmen with valid Certificates may work on the systems.

PART 2 - PRODUCTS

2.1 GENERAL RE: PIPING SYSTEM MATERIALS AND COMPONENTS

.1 Pipe, fittings, and piping system components are to be factory washed and degreased. Pipe is to be capped. Fittings and components are to be packaged.

.2 Piping system components to be site connected with piping are to be complete with factory installed, washed, degreased, and capped Type "K" hard copper piping stubs with joints silver brazed while the component and piping is full of nitrogen.

2.2 MANUFACTURERS

.1 Unless otherwise specified, acceptable medical gas system product manufacturers / suppliers are:

.1 Class 1 Inc.;

.2 Amico Corp.;

.3 Vitalaire.

2.3 PIPE, FITTINGS AND JOINTS

.1 Aboveground

.1 Type "L" or type "K" (as specified in Part 3) hard temper copper tubing to ASTM B819, "Standard Specification for Seamless Copper Tube for Medical Gas Systems", complete with wrought copper, brass or bronze "Silver Braze" fittings and silver brazed joints made with Silvaloy 15 or equal brazing alloy conforming to ANSI/AWS Standard A5.8 Classification BcuP-5.

.2 Underground

.1 Type "K" soft temper copper tubing to ASTM B88, factory cleaned and capped as for hard temper copper tubing, and supplied in a continuous length with no joints.

2.4 SHUT-OFF VALVES

.1 Full flow bronze body ball type valves, 4140 kPa (600 psi) rated, ¼ turn on-off from a fully closed to a fully open position, in-line serviceable, blow-out proof, factory pressure tested, and complete with a chrome plated brass or stainless steel ball depending on valve size, a double Teflon seal, a Teflon seat, O-ring packing, lever handle capable of locking in open or closed position, and colour coded permanent identification labels.

2.5 ZONE VALVE BOXES

.1 Wall mounting enamelled steel zone valve boxes with anchor brackets, sized to suit number of valves in the box, designed for vertical ganging type installation and complete with shut-off valves as specified above (less the handle lock feature), securely mounted to the back of the box, and complete with:

.1 stainless steel or matte finish extruded aluminium trim;

.2 re-installable front panel or window with centre mounted pull ring and silk-screen bilingual wording to read "CAUTION: MEDICAL GAS CONTROL VALVE - CLOSE ONLY IN EMERGENCY";

.3 gauge connection brazed onto the pipe stub at the downstream (patient) side of each valve assembly, with a 40 mm (1-½") diameter pressure (or vacuum) gauge conforming to requirements specified in Section 20 05 00 – Common Work Results for Mechanical, and with ranges as follows:

.1 vacuum – 0 to 760 kPa (0 to 30" Hg);

.2 all other services – 0 to 700 kPa (0 to100 psi).

2.6 LOCAL EMERGENCY ALARM PANEL/ZONE VALVE BOX ASSEMBLIES

.1 Flush wall mounting combination zone valve box and local emergency alarm panels and zone valve box assemblies incorporating a zone valve box and an area alarm panel in one enclosure. Each assembly is to be complete with:

.1 enamelled steel box sized to suit the components installed, complete with adjustable steel mounting brackets to accommodate various wall thicknesses, an anodized aluminium frame, and pull-out removable window with silk-screen bilingual wording to read "CAUTION: MEDICAL GAS CONTROL VALVES - CLOSE VALVES ONLY IN EMERGENCY";

.2 ball type shut-off valves as specified in this section but less the handle lock feature, sized as shown, complete with tube extensions, and secured to the back of the box;

.3 gauge connection brazed onto the pipe stub at the downstream (patient) side of each valve assembly, with a 40 mm (1-½") diameter pressure (or vacuum) gauge conforming to requirements specified in Section 20 05 00 – Common Work Results for Mechanical, and with ranges as follows:

.1 vacuum – 0 to 100 kPa (0 to 28.5" Hg);

.2 all other services – 0 to 700 kPa (0 to 100 psi).

.4 modular, microprocessor based, gas specific alarm units with large LED universal (psi, kPa, "Hg, Bar) pressure/vacuum displays, LED trend display, high and low alarms with dry contacts for connection to a master alarm panel, 90 dBA audible alarm with silence button and adjustable alarm reminder, alarm history recall, identified sensors with DISS connection located in the back box, and required remote monitoring hardware.

2.7 MEDICAL GAS SCAVENGING VACUUM PUMP SET

.1 Duplex, expandable, modular, oil free, rotary claw type, variable speed, anaesthetic gas medical gas vacuum system, factory assembled and tested and with model number, performance, and characteristics in accordance with drawing schedule.

.2 Positive displacement vacuum pumps with precision machined hook and claw rotors and a shaft-driven cooling fan and integral cooling air shroud, each direct driven by an inverter duty TEFC motor conforming to requirements specified in Section 20 05 00 – Common Work Results for Mechanical, factory assembled into a pump module, and complete with:

.1 bacterial removal inlet air filter with replaceable element;

.2 vacuum gauge conforming to requirements specified in Section 20 05 00 – Common Work Results for Mechanical;

.3 bleed valve, silent inlet check valve, inlet and outlet isolation ball valves, and type 316L stainless steel flexible inlet and outlet flexible connections;

.4 exhaust muffler, outlet check valve, and valved drip leg;

.5 vibration isolation mounts;

.6 Type "L" ASTM B819 degreased hard copper interconnecting piping with a main header, main ball type isolation valve, and a DISS demand check valve.

.3 Stack mounted pump modules, power and control panel, and interconnecting piping and wiring are to be assembled within a powder-coated steel framework.

.4 Factory pre-wired and mounted, NEMA 12, barriered, powder-coated panel for automatic lead/lag operation of the pumps in sequence to equalize run time, and complete with:

.1 main disconnect switch and a door interlock disconnect switch for each pump;

.2 thermal overload protected circuit breaker with magnetic short circuit protection and through the door manual disconnect and reset for each pump motor;

.3 H-O-A switch for each pump motor;

.4 overload protected variable speed drive with soft start function for each motor;

.5 control transformer with primary and secondary fusing for each control circuit, and transformer switching relay;

.6 vacuum transducer with digital vacuum display, security, and user adjustable set-points;

.7 PLC controls;

.8 200 mm (8") high resolution colour touch screen display with system status and alarm events, hour meters, user adjustable settings, vacuum level display, and password protection;

.9 numbered terminal strip with dry contacts for site connection to medical gas master alarm panel for lag/failure, motor overload, transformer failure, high and low vacuum.

.5 System settings are to be user adjustable and accessible with the system in operation and the control panel door closed. Programming and control is to include:

.1 lead pump is to operate continuously with variable speeds to maintain a constant level of 68 kPa (20" Hg);

.2 lead pump is to automatically alternate;

.3 lag pump is to start at 54 kPa (16" Hg);

.4 lag/failure alarm which requires manual reset;

.5 maximum run operation to ensure pump alternation;

.6 suitable controls to accommodate emergency generator power transfers;

.7 low vacuum alarm set at 50 kPa (15" Hg);

.8 lag/failure alarm contacts which open on lag condition, motor overload, power failure, transformer failure, high vacuum, and H-O-A switch not in Auto position.

.6 Manufacturers:

.1 Elmo Rietschle;

.2 Busch Corp.

2.8 SCAVENGING TERMINAL UNITS

.1 AGSS evacuation terminal units for low pressure gas scavenging, single, modular, recessed wall or ceiling mounted, surface mounted, or ceiling column mounted as shown, each complete with a permanently colour coded faceplate sealed behind a Lexan faceplate, a 20 mm (¾") diameter Type "L" inlet supply tube, and a 20 mm (¾") diameter and 30 mm (1-3/16") diameter taper fitting for connection to standard anaesthesia gas disposal tubing.

2.9 PRESSURE AND VACUUM SWITCHES FOR ALARM SIGNALS

.1 Factory assembled and set (to suit site requirements) switches, each labelled for the intended service, each suitable for pipeline pressure, medical gas or vacuum involved, and alarm function, and each complete with a NEMA 4 housing, tamper-proof external adjustment, a gas specific DISS inlet, a 50 mm (2") diameter monitoring gauge in accordance with requirements specified in Section 20 05 00- Common Work Results for Mechanical, and instructions for field adjustment.

2.10 LOCAL EMERGENCY ALARM PANELS

.1 Modular, field expandable, 115 volt, solid-state, microprocessor controlled, electronic, flush wall mounting audio-visual alarm panels designed for constant monitoring of piping system pressure or vacuum as applicable, and initiation of an alarm function on any open circuit only. Each panel is to be complete with:

.1 minimum #18 gauge steel back box sized to suit gas service modules required and equipped with adjustable mounting brackets to accommodate different wall thicknesses, a 115 volt power connection terminal block, fused 24 volt secondary transformer, a motherboard for plug-in connection of modules, and matte finish extruded aluminium or equal trim;

.2 power module with green power on LED, audible alarm with silencing pushbutton, adjustable (2 to 60 minutes) alarm repeater;

.3 gas specific colour coded sensors and displays with an error message for incorrect connection, each equipped with a microprocessor, LED digital readout in switch selected psi or kPa to facilitate a constant indication of each service being measured, a bar graph trend indicator to indicate green "NORMAL", yellow "CAUTION", and red "HIGH" or "LOW" alarm condition;

.4 red alarm light which flashes and an audible alarm which sounds when an alarm condition occurs, and an "ALARM MUTE" pushbutton to silence audible alarm, however, panel will remain in alarm state until problem is rectified;

.5 "TEST" pushbutton to test all panel functions;

.6 dry contacts for remote monitoring of high and low alarms;

.7 gas specific DISS connection (DISS body with check valve and DISS nut and gland) for each sensor module, supplied loose for field installation;

.8 building automation system serial communications interface panel.

2.11 TERMINAL UNITS

.1 DISS type, gas specific, non-interchangeable, modular, flush mounting terminal units, either singular or in groups as shown on drawings, each designed to accommodate mounting surface thickness variations of up to 12 mm (½"),complete with a CRN and following:

.1 die-cast outlet box;

.2 cartridge type primary check valve and stainless steel ball type secondary check valve;

.3 chrome plated brass outlet body with permanently embossed gas identification nameplate with bilingual labelling, all sealed behind a protective cover with chrome plated trim;

.4 required centreline spacing between multiple terminal units;

.5 temporary protective covers, and standing pressure test caps.

.2 Equipment Connection Terminal Units: DISS medical gas specific riser assemblies, factory cleaned and capped, complete with a protective dust cap, brass outlet body, Type "K" inlet supply tube and bulkhead mounting provision.

PART 3 - EXECUTION

3.1 DEMOLITION

.1 Perform required medical gas system demolition work. For demolition requirements, refer to Section 20 05 05 – Selective Demolition for Mechanical.

3.2 GENERAL RE: PIPING INSTALLATION

.1 Perform pipe joint brazing work in accordance with CAN/CSA Z7396.1 and reviewed brazing procedures submitted to the Consultant prior to start of work.

.2 Consultant reserves the right to cut-out and examine piping joints during course of the work or after work is complete, and if interior of cut-out sample and/or fittings are found to be contaminated with oxidation or any other material, piping will be considered unacceptable and must be cleaned or replaced.

.3 Where low pressure connecting assemblies are used in retractable gas columns, articulating arms, or any other dispensing assembly, DISS body or terminal unit which is used to connect it to copper pipeline must be brazed to the piping system.

.4 Refer to architectural drawing plans and elevations for exact locations of terminal units, zone valve boxes, alarm panels, and other such items.

3.3 INSTALLATION OF MEDICAL GAS SYSTEM PIPING

.1 Provide required medical gas system piping. Unless otherwise shown or specified, vacuum piping is to be minimum 20 mm (¾") diameter, and piping for all other services is to be minimum 12 mm (½") diameter.

.2 Piping aboveground, unless otherwise specified, is to be Type "L" hard copper.

.3 Provide threaded piping unions at piping connections to source equipment. Do not silver braze unions. Braze a male NPT adaptor on end of pipe, wrap Teflon tape onto the adaptor (2 threads back), and screw union as tight as possible by hand, then with proper wrenches for final tightening. Do not over tighten.

.4 Perform pipe brazing operations in strict accordance with requirements of CAN/CSA Z7396.1.

.5 Ensure tools used during erection of piping systems are kept clean and free from oil and grease.

.6 Support piping by means of support materials specified in Section 20 05 00 – Common Work Results for Mechanical, in accordance with requirements of article entitled "Pipeline Supports" in CAN/CSA Z7396.1 and with support spacing in accordance with table entitled "Spacing of Piping Supports" in CAN/CSA Z7396.1.

.7 Refer to Section 20 05 00 – Common Work Results for Mechanical. Identify piping system work, including valves, concealed and exposed, on a daily basis in accordance with requirements of CAN/CSA Z7396.1.

.8 Install vacuum piping sloped to low points. Equip each low point, including the bottom of vertical risers, with drip pockets consisting of a full size pipe tee with one leg capped with a removable cap. Ensure drip points are accessible and indicated on as-built record drawings.

.9 Provide DISS identified riser outlet piping connections in ceiling and/or wall spaces for connection to terminal outlets integral with manufactured equipment such as articulated arms (with riser plates) provided as part of this section of the work or as part of the work of other Divisions of the Specification. Terminal units will be pre-piped by equipment manufacturer to an accessible location. Carefully rough-in piping and coordinate equipment connections, particularly for flush mounted and/or ceiling mounted equipment.

.10 Provide identified piping connections to ceiling columns and/or headwalls provided as part of this section or as part of the work of other Divisions.

.11 Provide valved and capped connections for future extension. Clearly and permanently identify each capped connection and ensure they are exactly located on as-built record drawings.

.12 In accordance with CAN/CSA Z7396.1, provide a full size branch tee with shut-off valve for each gas source (including vacuum) downstream of main isolation valve.

.13 Perform revision/retrofit work as shown and in accordance with CAN/CSA Z7396.1.

3.4 INSTALLATION OF VALVES

.1 Provide shut-off/isolation valves where shown and/or required by CAN/CSA Z7396.1. Shut-off valves, unless otherwise specified, are to be ball type.

.2 Provide check valves where shown and/or required by CAN/CSA Z7396.1.

.3 Ensure valves are located for easy access and operation.

3.5 INSTALLATION OF ZONE VALVES AND BOXES

.1 Provide zone valves in zone valve boxes. Provide a service isolation valve in piping immediately upstream of each zone valve and on same floor.

.2 Accurately install boxes with reference to wall finish, and confirm exact locations prior to roughing-in.

.3 At each zone valve box location provide a typed, framed, and glazed list of all rooms and areas controlled by the zone valve. Submit lists and wording for review prior to framing and glazing.

3.6 INSTALLATION OF COMBINATION ZONE VALVE/AREA ALARM BOXES

.1 Provide combination zone valve box/area alarm assemblies. Provide a service isolation valve in piping immediately upstream of each zone valve and on same floor.

.2 Accurately install boxes with reference to wall finish, and confirm exact locations prior to roughing-in.

.3 At each zone valve box location provide a typed, framed, and glazed list of all rooms and areas controlled by the zone valve. Submit lists and wording for review prior to framing and glazing.

3.7 INSTALLATION OF MEDICAL GAS SCAVENGING VACUUM PUMP SET

.1 Provide a medical scavenging vacuum pump set. Secure the assembly in place, level, and plumb, on a concrete housekeeping pad. Connect the set header to the scavenging vacuum system piping. Refer to the drawing piping schematic and/or flow diagram.

.2 During start-up as specified in this section, site calibrate the control panel to initiate pump start at required vacuum levels.

.3 Extend Type "L" copper piping from the discharge header to outside the building. Terminate discharge piping in a "turned down" elbow arrangement with bronze insect screen permanently secured in place. Ensure discharge termination is a minimum of 3 m (10') from any door or window which can be opened, and a minimum of 15 m (50') from any fresh air intake.

.4 If discharge termination is located above roof, ensure it extends up high enough so as not to be restricted by snow.

.5 Connect valved drip leg piping and terminate piping over nearest funnel floor drain combination.

3.8 INSTALLATION OF SCAVENGING TERMINAL UNITS

.1 Provide medical gas scavenging terminal units and mount. Confirm exact locations prior to roughing-in. Refer to architectural drawings.

.2 Connect each terminal unit assembly with copper tubing extended to zone valve boxes to vacuum pump set.

.3 Connect scavenging terminal units (with flexible connectors) supplied with articulated arms as for scavenger terminal units specified above.

.4 \

3.9 INSTALLATION OF ALARM PANELS

.1 Provide wall mounted medical gas pressure/vacuum alarm panels. Confirm exact panel locations prior to roughing-in. Refer to architectural drawings.

.2 Provide required hardware and connect each panel with required medical gas/vacuum piping as applicable.

.3 Carefully check panel pressure/vacuum readings and make any required adjustments.

.4 When installation is complete, test each panel function, and make any adjustments and corrections necessary.

3.10 INSTALLATION OF TERMINAL UNITS

.1 Provide wall mounted medical gas terminal units, either singular or in groups as indicated. Leave temporary caps in place.

.2 Confirm exact locations prior to roughing-in. Refer to architectural drawings.

.3 Equip each terminal unit with a faceplate.

.4 Supply medical gas terminal units for factory installation in consoles, headwalls, articulating arms, ceiling service columns, and other such manufactured assemblies, and ship terminal units to manufacturer’s plant.

3.11 PIPING SYSTEM LEAKAGE TESTING

.1 Refer to Section 20 05 00 – Common Work Results for Mechanical. Ensure governing authorities are informed well in advance of scheduled tests so they may witness tests as required.

3.12 POWER AND CONTROL WIRING

.1 Line voltage power wiring to equipment, unless otherwise specified, will be done as part of the electrical work.

.2 Control and alarm wiring, unless otherwise specified, is to be installed in conduit as part of medical gas system work in accordance with electrical work wiring requirements, and manufacturer’s/supplier’s certified wiring schematics.

.3 Generally, power wiring (part of electrical work) and control and alarm wiring (part of mechanical work) is to be as follows:

Equipment	Line Voltage Power Wiring	Control and/or Alarm Wiring
scavenging pump set	to pre-wired integral panel c/w disconnect and starters	from control panel alarm contacts to master alarm panel as per Code
local alarm panels	115 volt to panel	
combo zone valve and area alarm units	115 volt to panel	

3.13 SYSTEM STARTUP

.1 When installation of medical gas system equipment from source of supply up to but not including outlets is complete, and piping leakage testing is complete, but prior to certification as specified below, and in accordance with article entitled "Commissioning of Supply Systems" in CAN/CSA Z7396.1, arrange for equipment manufacturers/ suppliers to visit site for length of time necessary to:

.1 check installation of equipment, and recommend any required adjustments, which are to be done immediately;

.2 start-up equipment, test operation, recommend any required adjustments, which are to be done immediately, check and verify safeties, operational sequences, controls, and alarms to ensure they are operating properly, and to ensure equipment performs as intended;

.3 obtain a letter or letters from system manufacturers/suppliers to certify above requirements have been successfully completed, have the letter(s) signed by the system supplier, and submit to the Consultant.

3.14 MEDICAL GAS SYSTEM CERTIFICATION

.1 When equipment start-up and certification as specified above is complete, notify Owner and Consultant that the systems are ready for certification as per CAN/CSA Z7396.1.

.2 Arrange for system installer to be part of the certification team.

.3 Should Owner’s Certification Agency be delayed by your default or by the fact that you are not ready for the certification procedure, or if scheduled certification is cancelled with less than 2 days' notice because systems are not ready, you will be responsible for all costs for Certification Agency to repeat the tests, remain on site longer than could reasonably be expected, or reschedule tests, as applicable.

.4 Owner’s Certification Agency will make interim site visits during construction to review medical gas system work. Cooperate with and reasonably assist the Agency, and immediately correct any deficient work reported by the Agency.

3.15 TRAINING

.1 Include for 2 site training sessions for a minimum of 6 people for 8 hours per session. Training is to be a full review of all components including but not limited to a full operation and maintenance demonstration, with abnormal events.

END OF SECTION

PART 1 - GENERAL

1.1 SUBMITTALS

.1 Submit shop drawings/product data sheets for all products specified in this section except piping and unions.

PART 2 - PRODUCTS

2.1 PIPE, FITTINGS, AND JOINTS

.1 Black Steel - Screwed Joint

.1 Mild black carbon steel, Grade B, ASTM A53, complete with Class 125 cast iron threaded fittings to ANSI/ASME B16.4, and screwed joints.

.2 Black Steel - Welded Joint

.1 Mild black carbon steel, Grade B, ASTM A53, mill or site bevelled, complete with factory made seamless carbon steel butt welding fittings to ASTM A234, Grade WPB, with long sweep pattern elbows unless otherwise specified, and welded joints.

.3 Black Steel - Grooved End Mechanical Joint

.1 Mild black carbon steel, Grade B, ASTM A53, factory or site roll grooved, complete with cast ductile iron grooved end fittings, including full flow elbows, and conforming to ASTM A536.

.2 Manufacturers:

.1 Equal to Victaulic Style 107 "QuickVic" rigid couplings for sizes 2" to 12", Style 07 "Zero-Flex" rigid couplings, Style W07 AGS rigid couplings for sizes 350 mm (14") to 1525 mm (60");

.2 Flexible grooved couplings can be used where system flexibility is desired. Noise and vibration reduction at mechanical equipment connections is achieved by installing three flexible couplings near the vibrations source in lieu of braided flex connectors. Victaulic Style 177 QuickVic or Style 77 flexible couplings for sizes 50 mm (2”) to 300 mm (12”). Style W77 AGS flexible couplings for sizes 350 mm (14”) to 1525 mm (60”).

.3 Grooved end fittings shall be cast of ductile iron conforming to ASTM A-536, Grade 65-45-12, forged steel conforming to ASTM A-234, Grade WPB 0.375" wall (9.53 mm wall), or fabricated from Std. Wt. Carbon Steel pipe conforming to ASTM A-53, Type F, E or S, Grade B. Fittings provided with an alkyd enamel finish or hot dip galvanized to ASTM A-153. Branch reductions on 2" (DN50) through 8" (DN200) header piping. Bolted branch outlets shall be manufactured from ductile iron conforming to ASTM A-536, Grade 65-45-12, with synthetic rubber gasket, and heat treated carbon steel zinc plated bolts and nuts conforming to physical properties of ASTM A-183. Victaulic Style 920 / 920N.

.4 Black Steel – Plain End Mechanical Joint

.1 Mild black carbon steel, Grade B, ASTM A53, mill or site bevelled, complete with cast ductile iron end fittings conforming to ASTM A536.

.2 Manufacturers:

.1 Equal to Victaulic QuickVic SD rigid couplings for sizes 1/2" to 2", rated for a working pressure of 300 psi.

.5 Soft Copper Pipe

.1 Type "L" seamless soft copper to ASTM B77.

.6 Hard Copper - Solder Joint

.1 Type "L" hard drawn seamless copper to ASTM B88, complete with wrought copper fittings to ANSI B16.22, and 95% tin / 5% Antimony solder joints.

2.2 PIPING UNIONS

.1 Screwed Piping

.1 Malleable iron, ground joint, bronze or brass to iron or bronze to bronze seat screwed unions and union elbows with a minimum pressure rating of 1725 kPa (250 psi) steam at 260°C (500°F).

.2 Flanged Piping

.1 Forged carbon steel slip-on type raised faced welding flange unions to ASTM A105, 150 lb. Class for steel pipe, and slip-on type 150 lb. Class bronze flanges for copper pipe.

2.3 SHUT-OFF VALVES

.1 Ball Type

.1 Class 600, 4140 kPa (600 psi) WOG rated full port ball valves, each complete with a forged brass or bronze body and cap, blowout-proof stem, solid forged brass chrome plated ball, "Teflon" or "PTFE" seat, threaded ends, and removable lever handle.

.2 Manufacturers:

.1 Toyo Valve Co. Fig. 5044A;

.2 Watts Industries (Canada) Inc. #FBV-3;

.3 Kitz Corp. Code 58;

.4 Victaulic Co. of Canada Ltd. Series 722;

.5 Apollo Valve #77-100.

.2 Butterfly Type

.1 Cast ductile iron, lug body style, 1200 kPa (175 psi) rated butterfly valve, each complete with a neck to permit 50 mm (2") of insulation above the flange, a field replaceable EPDM seat, ductile iron disc, stainless steel shaft with EPDM seal, a lever handle for valves to and including 150 mm (6") diameter, a handwheel and gear type operator for valves larger than 150 mm (6") diameter, and each suitable for bubble-tight dead end service with valve closed and either side of connecting piping removed.

.2 Manufacturers:

.1 DeZurik of Canada Ltd., Figure No. 632;

.2 Victaulic Co. of Canada Ltd. Vic-300 MasterSeal or AGS Vic-300;

.3 Apollo Valve 143 Series;

.4 Watts Industries (Canada) Inc. #BF-03;

.5 Kitz Corp. 6112 Series;

.6 Toyo Valve Co. 918DESL/G2.

2.4 SWING CHECK VALVES

.1 Bronze - Screwed

.1 Class 125, 1380 kPa (200 psi) WOG rated horizontal swing check valves, each complete with a "Y" pattern bronze body, hinged brass disc, easy access screw-in cap, and screwed ends.

.2 Manufacturers:

.1 Toyo Valve Co. Fig. 236;

.2 Nibco #T-433;

.3 Kitz Corp. Code No. 22.

.2 Steel - Grooved Ends

.1 Victaulic Co. of Canada Ltd. Series 716, 779 or W715 grooved end carbon steel check valves suitable for mounting horizontally or vertically.

.3 Cast Iron - Screwed and Flanged

.1 Cast iron, bronze trim, 1380 kPa (200 psi) rated swing check valves, each complete with a bronze disc and seat, malleable iron hinge, bolted cover, and screwed or flanged ends as required.

.2 Manufacturers:

.1 Toyo Valve Co. Fig. 435A;

.2 Watts Industries (Canada) Inc. #F-511;

.3 Kitz Corp. Code No. 78.

2.5 VERTICAL LIFT CHECK VALVES

.1 Class 150, 1380 kPa (200 psi) WOG rated bronze vertical lift check valves, each complete with screwed ends and a bronze disc.

.2 Manufacturers:

.1 Toyo Valve Co. Fig. 231;

.2 Watts Industries (Canada) Inc. #600;

.3 Kitz Corp. Code No. 36.

2.6 WAFER CHECK VALVES

.1 Threaded lug body type, full bore, ANSI Series 150, 1965 kPa (285 psi) rated at 38°C (100°F), non-slam wafer check valves, each complete with a carbon steel body, stainless steel discs, a shaft, springs, disc stop and thrust bearings constructed of type 316 stainless steel, and seat materials to suit the application. The inside diameter of the valve must equal the inside diameter of the connecting pipe.

.2 Manufacturers:

.1 Gulf Valve Co. "WAFER CHECK";

.2 Watts Industries (Canada) Inc. Series ICV-125;

.3 The Metraflex Co. Style CVXX.

2.7 DRAIN VALVES

.1 Minimum 2070 kPa (300 psi) WOG rated, 20 mm (¾") diameter straight pattern bronze ball valves, each complete with a threaded outlet suitable for coupling connection of 20 mm (¾") diameter hose, and a cap and chain.

.2 Manufacturers:

.1 Toyo Valve Co. Ltd. Fig. 5046;

.2 Watts Industries (Canada) Inc. #B-6000-CC;

.3 Kitz Corp. Code No. 68AC;

.4 Apollo Valves #78-104-01.

2.8 CIRCUIT BALANCING VALVES

.1 Screwed or flanged as required, globe style, non-ferrous circuit balancing valves designed to facilitate precise flow measurement, precision flow balancing, and positive shut-off, complete with capped and valved drain connection, and valved ports for connection to a differential pressure meter.

.2 Manufacturers:

.1 Equal to Victaulic Co. of Canada Ltd. (Tour & Anderson) Series 787 screwed, Series 788 flanged, and 789 grooved end, and Series 78K "Koil Kit" valves.

2.9 RADIATOR SHUT-OFF AND BALANCING VALVES

.1 Heavy pattern, straight, 1750 kPa (250 psi) rated at 120°C (250°F) bronze radiator valves, each complete with composition disc, spring loaded packing, and union. Equip inlet valves with a handle for shut-off. Equip outlet valves with a lockshield for shut-off and balancing.

.2 Manufacturers:

.1 Dahl Brothers Canada Ltd. #11042 and #13013;

.2 Spirax Sarco Ltd. Type R.

2.10 PRESSURE RELIEF VALVES

.1 ASME tested, rated, and certified, bronze or cast iron bronze fitted, 1725 kPa (250 psi) rated pressure relief valves, each capable of relieving full output of equipment it is associated with, and each factory set at 415 kPa (60 psi) unless otherwise specified.

.2 Manufacturers:

.1 ITT Bell & Gossett 3301/4100, or 790/1170;

.2 Dresser Industries "CONSOLIDATED";

.3 Spirax Sarco Ltd. SVI Series;

.4 McDonnell & Miller Models 250 and 260;

.5 Conbraco 10-600 Series;

.6 Watts Industries (Canada) Inc. 174A or 740.

2.11 AIR VENTS

.1 Manual Air Vents

.1 Equal to Conbraco 27 Series, 3.2 mm (⅛") diameter with a key handle.

.2 Automatic Air Vents

.1 Float actuated air vents, each complete with a semi-steel body and cap, a stainless steel float assembly and seat, and a neoprene head.

.2 Manufacturers:

.1 Spirax Sarco Ltd., Type 13 W for system working pressures to 1035 kPa (150 psi), 13 WH for system working pressures greater than 1035 kPa (150 psi);

.2 Armstrong International Inc. No. 1-AV.

2.12 STRAINERS

.1 Cast iron wye shaped strainers, minimum 890 kPa (125 psi) rated and complete with a removable type 304 stainless steel screen with perforations sized to suit the application, and, for strainers 50 mm (2") diameter and larger, a blowdown pipe connection tapping.

.2 Manufacturers:

.1 Spirax Sarco Ltd. Type IF-125 screwed or Type AF-250 flanged;

.2 Toyo Valve Co. Ltd. Fig. 380A screwed or Fig. 381 flanged;

.3 Victaulic Co. of Canada Style 732 or W732 "Vic-Strainer";

.4 Armstrong International Inc. A1 Series;

.5 Watts Industries (Canada) Inc. #77SCI;

.6 Mueller Steam Specialty Products Model 11M screwed or Model 758 flanged.

2.13 PIPING EXPANSION JOINTS

.1 Steel Piping Mains:

.1 Controlled flexing, flanged expansion joints, 2070 kPa (300 psi) rated, with corrugated stainless steel bellows with closely matched neck rings and reinforcing or control rings, and selected for operating pressure plus 25% safety factor.

.2 Manufacturers:

.1 Senior Flexonics Ltd. Series CSF "High-Corr";

.2 Victaulic Co. of Canada Ltd. Style 155 with Style 07 or 107 "Zero-Flex" couplings on each side of assembly and a full length steel "V" shaped support trough with hangers;

.3 The Metraflex Co. Model MC.

.2 Steel or Copper Branch/Runout Piping:

.1 Externally pressurized, 1380 kPa (200 psi) rated expansion joints with a stainless steel bellows and shroud, welding or threaded steel nipple ends for steel piping, and copper sweat nipple ends for copper piping.

.2 Manufacturers:

.1 Senior Flexonics Ltd. Series "H";

.2 The Metraflex Co. Model "HP".

2.14 PIPING ALIGNMENT GUIDES

.1 Prime coat painted black carbon steel pipe alignment guides sized and fabricated to suit pipe size and pipe insulation thickness.

.2 Manufacturers:

.1 Senior Flexonics Ltd. Series PGT;

.2 E. Myatt & Co. Ltd. Fig. 1267;

.3 Empire Tool & Mfg. Inc. Fig 256;

.4 The Metraflex Co. Style IV.

2.15 PIPE ANCHORS

.1 Welded structural black steel anchors of a design, size, and type to securely anchor pipe at point shown. Each anchor is to withstand 150% of axial thrust, and, as specified in Part 1 of this section, is to be designed and detailed by a Professional Structural Engineer.

2.16 FLEXIBLE PUMP CONNECTIONS

.1 Flexible metal hose assemblies, each complete with annular corrugated unbraided type 321 stainless steel inner core, braided type 321 stainless steel hose, and a collar and flange at each end, all suitable for twice the working pressure of the system.

.2 Manufacturers:

.1 Senior Flexonics Inc. A1 and A6 Series;

.2 The Metraflex Co. Model SST and "METRA-MINI".

.3 Option: Victaulic Series 380, 381 or 382 pump drop assemblies. Includes flow control, vibration-controlling flexible couplings, access ports for gauges and thermowells and an integral flanged pump connection. Rated to the working pressure of Class 150 flange connection. Sizes 2” to 12”.

2.17 AIR SEPARATORS

.1 Vortex type vertical air separator with side tangential inlet and outlet connections, a top air outlet connection, and bottom drain connection. Separator is to be constructed of cast iron or fabricated steel for a pressure of 1105 kPa (160 psi) at 180°C (350°F) in accordance with Section VIII, Division 1 of the ASME Boiler and Pressure Vessel Code.

.2 Manufacturers:

.1 S.A. Armstrong Ltd. Model "VA".

.2 ITT Bell & Gossett "Rolairtrol".

.3 Taco Canada Ltd. "Vortech".

.4 Flo-Fab Inc. “SEP-T” Series.

2.18 EXPANSION TANKS

.1 Replaceable bladder type, factory pressurized expansion tank with permanent separation of air and water, in accordance with drawing schedule and complete with:

.1 steel pressure tank suitable for a working pressure of 870 kPa (125 psi) at 115°C (240°F), constructed and stamped in accordance with the ASME Code for Unfired Pressure Vessels and complete with a system connection, drain connection, air charging valve, and a red oxide primer finish;

.2 heavy-duty butyl rubber (EDPM) bladder;

.3 tapping for installation of a pressure gauge;

.4 For horizontal tanks only, mounting saddles supplied loose;

.5 factory secured seismic restraint connection hardware.

.2 Manufacturers:

.1 Hamlet & Garneau Inc. AL Series "Expanflex";

.2 S.A. Armstrong Ltd. Series "AX-V" Series "L";

.3 ITT Bell & Gossett Series "B" (ASME);

.4 Amtrol "Extrol" Series.

.5 Taco (Canada) Ltd. "CBX" Series.

.6 Flo-Fab Inc. “WX-C” Series, “ABT” Series

2.19 GLYCOL SOLUTION MIXING AND STORAGE TANKS

.1 Package type glycol solution mixing, storage and automatic feed assembly designed to maintain minimum system pressure levels and complete with:

.1 round, polyethylene or polypropylene tank sized to suit system capacity, complete with a solution level scale in litres and Imperial gallons, removable cover, and a welded steel angle stand assembly with legs, pump shelf, and control panel bracket, all factory finished with enamel;

.2 factory pre-piped minimum 1/3 hp, 115 V, 1-phase rotary bronze gear pump with capacity and pressure differential to suit system requirements, factory wired to control panel, mounted on a shelf integral with steel stand assembly, and complete with shut-off valve and strainer;

.3 tank pressure relief valve with discharge piped back into tank;

.4 tank low level switch;

.5 pressure gauge;

.6 Honeywell #L404A "Pressurtrol" or equal pipe mounting differential pressure switch with a 100 kPa to 1000 kPa (15 psi to 150 psi) range;

.7 115 V, 1-phase, factory mounted and pre-wired control panel with an NEMA 2 enamelled steel enclosure, designed to control and operate glycol gear pump either manually or automatically to pump glycol solution into system, and to stop pump and initiate an audible/visual alarm if a low glycol solution level occurs in tank, and complete with:

.1 terminal blocks for power and control wiring connections;

.2 H-O-A switch with green "Power On" indicator light;

.3 120 volt/12 volt control transformer;

.4 low glycol solution level alarm buzzer with silencing switch, an alarm light which remains illuminated until low-level switch is reset, and an alarm push-to-test button;

.5 dry contacts for building automation system alarm annunciation.

.8 factory secured seismic restraint connection hardware.

.2 Manufacturers:

.1 ITT Bell & Gossett Series GMU;

.2 S. A. Armstrong Ltd. GLA Standard Series;

.3 HG Spec. Inc.

2.20 GLYCOL

.1 Propylene glycol blended with Nitrite based corrosion inhibitors.

2.21 GENERAL RE: CIRCULATING PUMPS

.1 Pumps are to be bronze fitted centrifugal pumps in accordance with drawing schedule, each non-overloading under all operating conditions and factory tested at specified operating conditions.

PART 3 - EXECUTION

3.1 DEMOLITION

.1 Perform required hydronic piping system demolition/revision work. Refer to demolition requirements specified in Section 20 05 05 – Selective Demolition for Mechanical.

3.2 PIPING INSTALLATION REQUIREMENTS

.1 Provide required hydronic piping. Pipe, unless otherwise specified, is to be:

.1 For pipe sizes up to and including 50 mm (2") diameter, Schedule 40 black steel, screwed, or type "L" hard copper with solder joints or pressure coupled joints;

.2 For pipe 65 mm (2-½") to 300 mm (12") dia. and larger, Standard weight grooved end black steel pipe, 10 mm (0.375") thickness, with grooved end fittings and couplings, or, Standard weight black steel pipe, 10 mm (0.375") thickness, with welding fittings and welded joints;

.3 For short branch connections, 25 mm (1”) pipe diameter size and less, to heating equipment where structural obstructions occur and site bending of pipe is advantageous, a single length of type "L" soft copper.

.2 Slope horizontal piping mains to provide a minimum continuous up-grade of 25 mm (1") in 6 m (20') to high points. Slope branch supply and return piping connections to equipment a minimum of 25 mm (1") in 1.2 m (4'). Leave sufficient room at high points for installation and maintenance of air vents.

.3 Install automatic control valves, piping wells and similar piping and/or equipment mounted control components required for automatic temperature control systems supplied as part of the control work. Refer to drawing control diagrams and details.

.4 Connect equipment provided as part of the work of other sections with piping as indicated and/or required. Refer to pipe connection details on drawings.

.5 Provide screwed unions, removable mechanical joint couplings, or weld-on or solder-on flanges in piping at all connections to valves, strainers and similar piping system components which may need maintenance or repair, at equipment connections, in runs of piping exceeding 9 m (30') at 4.5 m (15') regular intervals to permit removal of sections of piping, and wherever else indicated on drawings.

.6 Provide shut-off valves in piping connections to equipment, to isolate piping risers, to isolate other sections of systems as shown, and wherever else indicated on drawings. Valves in piping to and including 50 mm (2") dia. are to be ball type. All other shut-off valves are to be ball or butterfly type unless otherwise specified. Locate valves so they are easily accessible. Wherever possible, install valves at uniform height. Provide chain operators for valves which are inaccessible for operation from floor level.

.7 Provide a check valve in discharge piping of every pump, and elsewhere in piping where shown on drawings. Where check valves are required in vertical piping, ensure they are suitable in all respects for the application. Check valves for vertical in-line and/or base mounted circulating pumps are integral with the discharge accessory.

.8 Provide a drain valve at base of each piping riser, in drain connections to equipment, in low points of horizontal piping, and wherever else shown and/or specified.

.9 Provide circuit balancing valves in piping generally where shown on drawings but with exact locations in accordance with instructions of personnel doing system flow balancing work. Confirm locations prior to installation.

.10 Grooved pipe ends shall be clean and free from indentations, projections and roll marks in the area from pipe end to groove for proper gasket sealing. All couplings will meet Victaulic standards for

visual inspection sizes 2” to 12”. The gasket style and elastomeric material (grade) shall be verified as suitable for the intended service as specified. Install in accordance with manufacturer’s latest recommendations. A Victaulic factory trained representative shall periodically visit the job site and review the installation for best practices. The installing Contractor shall correct any identified deficiencies. Victaulic product that has been examined and has not met the visual inspection criteria for proper installation must be corrected and re-examined by Victaulic prior to the completion of the project.

3.3 INSTALLATION OF PRESSURE RELIEF VALVES

.1 Provide factory set pressure relief valves. Pipe discharge of each water piping relief valve to drain unless otherwise shown or specified.

.2 Pipe discharge of each glycol solution piping relief valve back to system expansion tank or return piping.

.3 Confirm relief valve settings.

3.4 INSTALLATION OF AIR VENTS

.1 Provide an air vent in piping mains at all high points, at equipment connections, and wherever else shown and/or specified. Equip each air vent with a ball type shut-off valve. Install vents in 100 mm (4") dia. and larger piping and all vents in mechanical rooms in accordance with drawing detail.

.2 Provide 9 mm (3/8") dia. copper drain piping from each automatic air vent to nearest suitable drain and terminate so discharge is visible. Identify drain piping.

3.5 INSTALLATION OF STRAINERS

.1 Provide strainers in piping. Locate strainers so baskets are easily accessible and removable. Clean strainer baskets during and after piping system flushing and cleaning is complete, and before water quantity balancing commences.

3.6 INSTALLATION OF EXPANSION COMPENSATORS

.1 Provide expansion compensation in piping with exact locations to suit piping as installed.

.2 Provide double pipe alignment guides in horizontal piping at each side of expansion compensation facilities to permit movement in axial direction only. Secure guides to building structure only.

.3 Provide a pipe guide at each side of expansion joints in vertical risers.

.4 When using grooved piping in a riser refer to a Victaulic riser design for anchor and guide locations.

3.7 INSTALLATION OF PIPING ANCHORS

.1 Provide anchors to secure piping to structure. Locate anchors generally where shown but with exact locations to suit piping as installed and requirements of reviewed anchor shop drawings.

.2 When installation of anchors is complete, arrange, and pay for anchor design engineer to visit site to review anchor installation. Submit a signed letter with engineer’s stamp from design engineer confirming each anchor is properly installed.

3.8 INSTALLATION OF AIR SEPARATOR

.1 Provide an air separator in piping and connect with valved inlet and outlet piping.

.2 Extend valved blowdown piping from bottom pipe connection tapping to nearest floor drain location.

.3 Equip top pipe connection tapping with an automatic air vent, and piping as detailed.

3.9 INSTALLATION OF EXPANSION TANK

.1 Provide an expansion tank.

.2 Secure horizontal expansion tank in place from structure by means of properly sized galvanized steel hanger rods and support saddles supplied with tank.

.3 Secure tank stand to a concrete housekeeping pad by means of machine bolts.

.4 Connect tank with system piping. Extend a drain line from tank piping and terminate drain line with a drain valve. Provide an air vent.

.5 Provide a water make-up connection line complete with relief valve and pressure gauge and connect to system piping. Terminate make-up piping for connection to domestic cold water piping as part of the work of Section 22 11 00 – Facility Water Distribution. Check relief valve operation and adjust as required.

.6 Check tank air charge and adjust to suit system.

3.10 INSTALLATION OF GLYCOL SOLUTION MIXING AND STORAGE TANK

.1 Provide a mixing and storage tank and feed assembly for each glycol solution circulating system.

.2 Secure tank stand to a concrete housekeeping pad. Connect with system piping. Refer to drawing detail.

.3 Fill tank with, unless otherwise specified, a solution of 50% water, 50% propylene glycol, and test solution to confirm proper concentrations.

.4 When installation is complete, test operation of assembly, including alarms, and adjust as required. Adjust pressure switch to suit glycol solution circulating system pressure.

3.11 INSTALLATION OF FLEXIBLE PIPING CONNECTIONS

.1 Provide flexible connections in piping connections to equipment.

.2 Install in accordance with manufacturer’s instructions.

3.12 FLUSHING AND CLEANING PIPING

.1 Flush and clean new piping in accordance with requirements specified in Section 23 25 00 – HVAC Water Treatment.

3.13 TESTING, ADJUSTING AND BALANCING

.1 When work is complete and equipment is operating as intended, test, adjust and balance water flows in accordance with requirements specified in Section 20 05 93 – Testing, Adjusting, and Balancing for Mechanical Systems, and Section 20 08 00 – Commissioning of Mechanical Systems.

END OF SECTION

PART 1 - GENERAL

1.1 SUBMITTALS

.1 Submit shop drawings/product data sheets for all products specified in this section except piping and unions.

1.2 QUALITY ASSURANCE

.1 Valves and similar items for use in systems with a pressure rating of 105 kPa (15 psi) are to be stamped with a Canadian Registration Number (CRN).

.2 Steam and condensate piping system work is to be in accordance with following:

.1 CSA B51, Boiler, Pressure Vessel, and Pressure Piping Code;

.2 ASME B31, Standards of Pressure Piping;

.3 and governing Provincial and/or Municipal Codes and Regulations.

PART 2 - PRODUCTS

2.1 PIPE, FITTINGS, AND JOINTS

.1 Black Steel - Screwed Joint

.1 Mild black carbon steel, Grade B, ASTM A53, complete with Class 125 or Class 250 cast iron threaded fittings to ANSI/ASME B16.4, and screwed joints.

.2 Black Steel - Welded Joint

.1 Mild black carbon steel, Grade B, ASTM A53, mill or site bevelled, complete with factory made seamless carbon steel butt welding fittings to ASTM A234, Grade WPB with a wall thickness to match pipe, and welded joints.

.2 in accordance with ASME Codes B131.1, B131.3 and B131.9.

2.2 PIPING UNIONS

.1 Screwed Piping

.1 Low Pressure Steam: Malleable iron, ground joint, brass to iron or bronze to bronze seat screwed unions and union elbows with a minimum pressure rating of 1725 kPa (250 psi) steam at 260°C (500°F).

.2 Condensate: Malleable iron, ground joint, factory tested screwed unions and union elbows with a brass to iron seat and a minimum pressure rating of 4140 kPa (600 psi) WOG (non-shock).

.3 High Pressure Steam: Screwed unions as specified above for screwed condensate piping.

.2 Welded Piping

.1 Low Pressure Steam: Forged carbon steel slip-on raised face welding flange unions to ASTM A105, 150 lb Class.

.2 Condensate: Welding flange unions as specified above for welded low pressure steam piping but 300 lb Class.

.3 High Pressure Steam: 300 lb Class welding flange unions as specified for welded condensate piping.

2.3 SHUT-OFF VALVES

.1 Ball, gate or globe type valves suitable in all respects for steam and condensate service.

.2 Low Pressure Steam and Condensate:

.1 Ball type less than or equal to 50 mm (2"):

.1 Forged brass or bronze full bore ball valve, 1035 kPa (150 psi) WSP rated, complete with a chrome plated forged brass ball, PTFE seat and gland packing, screwed ends and a carbon steel handle.

.2 Manufacturers:

.1 Kitz Corp. Code No. 58;

.2 Watts Industries (Canada) Inc. #FBV-3;

.3 Toyo Valve Co. Fig. 5044A;

.4 Apollo Valve # 77-100;

.5 Nibco #T-FP-600, or #T-585-70.

.2 Ball type greater than or equal to 65 mm (2-½"):

.1 Cast iron, flanged, 860 kPa (125 psi) WSP rated ball valve with a cast iron Teflon fused ball, blow-out proof stainless steel stem, reinforced Teflon seats, and steel handle which is lockable in fully open and fully closed positions.

.2 Manufacturers:

.1 American Valve, Inc. 4000 Series;

.2 Nibco #F-510-CS-R-25, or #F-510-CS-R-66-FS.

.3 Bronze gate less than or equal to 50 mm (2"):

.1 Cast bronze, screwed, 860 kPa (125 psi) WSP rated rising stem gate valve with a screwed-in cast bronze bonnet, cast bronze disc, and zinc or aluminum die-cast handwheel.

.2 Manufacturers:

.1 Kitz Corp. Code No. 24;

.2 Nibco #T-111;

.3 Toyo Valve Co. Fig. 293;

.4 Watts Industries (Canada) Inc. #B3100.

.4 Bronze globe less than or equal to 50 mm (2"):

.1 Cast bronze, screwed, 860 kPa (125 psi) WSP rated rising stem globe valve with a union bonnet, reinforced PTFE disc, and zinc or aluminum die-cast handwheel.

.2 Manufacturers:

.1 Kitz Corp. Code. No. 03;

.2 Nibco #T-235-Y;

.3 Toyo Valve Co. Fig. 220;

.4 Watts Industries (Canada) Inc. #B4000.

.5 Cast iron gate greater than or equal to 65 mm (2-1/2"):

.1 Class 125 cast iron bronze mounted rising stem flanged gate valves, each equipped with a cast iron disc and a cast or ductile iron handwheel.

.2 Manufacturers:

.1 Kitz Corp. Co. No. 72;

.2 Nibco #F-617-0;

.3 Toyo Valve Co. Fig. 421A;

.4 Watts Industries (Canada) Inc. #F-503;

.6 Cast iron globe greater than or equal to 65 mm (2-1/2"):

.1 Class 125 cast iron bronze fitted flanged globe valves, each equipped with a cast iron disc and a cast or ductile iron handwheel.

.2 Manufacturers:

.1 Kitz Corp. Code No. 76;

.2 Nibco #F-718-B;

.3 Toyo Valve Co. Fig. 400A;

.4 Watts Industries (Canada) Inc. #F-503.

.3 High Pressure Steam and Condensate:

.1 Bronze gate less than or equal to 50 mm (2"):

.1 Class 150 cast bronze gate valves, each equipped with screwed ends, rising stem, cast bronze disc, and cast zinc, or aluminum handwheel.

.2 Manufacturers:

.1 Kitz Corp. Code No. 42;

.2 Nibco #T-134;

.3 Toyo Valve Co. Fig. 298;

.4 Watts Industries (Canada) Inc. #B-3110.

.2 Bronze globe less than or equal to 50 mm (2"):

.1 Class 150 cast bronze globe valves, each equipped with screwed ends, rising stem, non-metallic disc, and cast zinc or aluminum handwheel.

.2 Manufacturers:

.1 Kitz Corp. Code No. 09;

.2 Nibco #T-235-Y;

.3 Toyo Valve Co. Fig. 221;

.4 Watts Industries (Canada) Inc. #B-4000.

.3 Cast steel gate greater than or equal to 65 mm (2-½"):

.1 Class 150 OS&Y, rising stem, bolted bonnet cast steel gate valve with plain solid wedge or flexible solid wedge depending on valve size, flanged ends, and ductile iron handwheel.

.2 Manufacturers:

.1 Kitz Corp. Fig. 150 SCLS;

.2 Bonney Forge Corp. Fig. 1-11-RF;

.3 BERIC Fig. 101-RF-AA08-H.

.4 Cast steel globe greater than or equal to 65 mm (2-½"):

.1 Class 150 OS&Y, rising stem, bolted bonnet cast steel globe valve with swivel disc, flanged ends, and ductile iron handwheel.

.2 Manufacturers:

.1 Kitz Corp. Fig. 150 SCJS;

.2 Bonney Forge Corp. 1-31-RF;

.3 BERIC Fig. 201-RF-EA08-H.

2.4 HORIZONTAL SWING CHECK VALVES

.1 Low Pressure Steam and Condensate:

.1 Bronze less than or equal to 50 mm (2"):

.1 Class 125 "Y" pattern screwed cast bronze swing check valve.

.2 Manufacturers:

.1 Kitz Corp. Code No. 22;

.2 Nibco #TE-413-B;

.3 Toyo Valve Co. Fig. 236;

.4 Watts Industries (Canada) Inc. #B-5000.

.2 Cast iron check greater than or equal to 65 mm (2-½"):

.1 Class 125 cast iron bronze trim swing check valve with flanged ends and bolted cover.

.2 Manufacturers:

.1 Kitz Corp. Code No. 78;

.2 Nibco #FE-918-B;

.3 Toyo Valve Co. Fig. 435A;

.4 Watts Industries (Canada) Inc. #F-511.

.2 High Pressure Steam and Condensate:

.1 Bronze less than or equal to 50 mm (2"):

.1 Class 300 cast bronze "Y" pattern swing check valve with screwed ends.

.2 Manufacturers:

.1 Kitz Corp. Code No. 19;

.2 Nibco #T-473;

.3 Toyo Valve Co. Fig. 360;

.4 Watts Industries (Canada) Inc. #B-5030.

.2 Cast steel greater than or equal to 65 mm (2-½"):

.1 Class 300 cast steel swing check valves, each complete with flanged ends.

.2 Manufacturers:

.1 Kitz Corp. Fig. 300SCOS;

.2 Bonney Forge Corp. 3-61-RF;

.3 BERIC Fig. 303-RF-EA08-X.

2.5 DRAIN VALVES

.1 Minimum 1725 kPa (250 psi) water rated, 20 mm (¾") diameter straight pattern bronze or brass ball valves, each complete with a stainless steel ball and stem, threaded outlet suitable for coupling connection of 20 mm (¾") hose, locking handle, and a cap and chain.

.2 Manufacturers:

.1 Toyo Valve Co. Ltd. Fig 5046;

.2 Nibco #T-585-70-HC;

.3 Kitz Corp. Code No. 68AC;

.4 Apollo Valve # 70-140-64;

.5 Watts Industries (Canada) Inc. #B-6000-CC.

2.6 FLEXIBLE PIPE CONNECTIONS

.1 Flexible metal hose assemblies, each complete with annular corrugated un-braided type 321 stainless steel inner core, braided type 321 seamless steel hose, and a collar and flange at each end, all suitable for twice the working pressure of the system.

.2 Manufacturers:

.1 The Metraflex Co. Model SST and "METRA-MINI";

.2 Senior Flexonics Inc. A1 and A6 Series.

2.7 PIPING EXPANSION JOINTS

.1 Steel Piping Mains:

.1 Controlled flexing, flanged expansion joints, 2070 kPa (300 psi) rated, with corrugated stainless steel bellows with closely matched neck rings and reinforcing or control rings, selected to suit operating temperature plus 25% safety factor.

.2 Manufacturers:

.1 Senior Flexonics Ltd. Series CSF "High-Corr";

.2 The Metraflex Co. Model MC.

.2 Steel Branch/Runout Piping:

.1 Externally pressurized, 1380 kPa (200 psi) rated expansion joints with a stainless steel bellows and shroud, and welding or threaded steel nipple ends.

.2 Manufacturers:

.1 Senior Flexonics Ltd. Series "H";

.2 The Metraflex Co. Model "HP".

2.8 PIPING ALIGNMENT GUIDES

.1 Prime coat painted black carbon steel pipe alignment guides sized and fabricated to suit pipe size and pipe insulation thickness.

.2 Manufacturers:

.1 Senior Flexonics Ltd. Series PGT;

.2 E. Myatt & Co. Ltd. Fig. 1267;

.3 Empire Tool & Mfg. Co. Inc. Fig. 256;

.4 The Metraflex Co. Style IV.

2.9 PIPE ANCHORS

.1 Welded structural black steel anchors of a design, size, and type to securely anchor pipe at point shown. Each anchor is to withstand 150% of axial thrust, and is to be designed and detailed by a professional structural engineer registered in the jurisdiction of the work. Submit anchor design, fabrication, and installation shop drawings, stamped by design engineer.

2.10 STEAM PRESSURE REDUCING VALVES

.1 Factory assembled and tested, self-contained, dead end shut-off, pilot operated pressure reducing valves in accordance with drawing schedule, screwed or flanged as required, each complete with a 1725 kPa (250 psi) rated cast iron valve and pilot body with stainless steel trim, stainless steel valve diaphragm, and phosphor bronze pilot diaphragm.

.2 Manufacturers:

.1 Spirax Sarco Canada Ltd. Model 25P;

.2 Singer Valve Co. Ltd.;

.3 Kieley & Mueller.

.4 Spence Model ED (Colton Industries)

2.11 STEAM SEPARATORS

.1 Cast iron baffle type steam separators, each sized to condensate pipe size, each complete with screwed or flanged ends as required and a float thermostatic steam trap module.

.2 Manufacturers:

.1 Spirax Sarco Canada Ltd. Model S1 or Model S3;

.2 Flowserve Gestra;

.3 Armstrong International Inc.

.4 Steam Specialty Sales Colton Industries Model MSF

2.12 PRESSURE RELIEF VALVES

.1 Factory tested, rated and certified, bronze or cast iron bronze fitted, 1725 kPa (250 psi) rated pressure relief valves, each factory tested, certified and sealed, and each capable of relieving full output of steam pressure reducing valve(s) located upstream.

.2 Manufacturers:

.1 Spirax Sarco Canada Ltd. "SVI" Series;

.2 Dresser Industries;

.3 ITT Bell & Gossett;

.4 McDonnell & Miller;

.5 Conbraco.

.6 Kunckle

2.13 DRIP PAN ELBOWS

.1 Cast iron drip pan elbow sized to discharge pipe size of associated pressure relief valve, each complete with screwed or flanged connections as required, and a drain connection tapping.

.2 Manufacturers:

.1 Spirax Sarco Canada Ltd. Type 299;

.2 Flowserve Gestra;

.3 Armstrong International Inc.

.4 Steam Specialty Sales / Colton Industries

2.14 AIR VENTS

.1 Low Pressure Steam:

.1 Cast iron body float and thermostatic type air vent with stainless steel float, element and valve head, bronze valve seat, and nylon ball valve.

.2 Manufacturers:

.1 Spirax Sarco Canada Ltd. Model 6A;

.2 Flowserve Gestra.

.3 Steam Specialty Sales / Colton Industries

.2 High Pressure Steam:

.1 Brass alloy body and cap float type air vent with plastic float, rubber valve, and stainless steel valve seat and check valve.

.2 Manufacturers:

.1 Spirax Sarco Canada Ltd. Model AE 30;

.2 Flowserve Gestra.

.3 Steam Specialty Sales / Colton Industries

2.15 STRAINERS

.1 Cast iron wye shaped strainers, screwed or flanged as required, minimum 1035 kPa (150 psi) rated and complete with a removable type 304 stainless steel screen with perforations sized to suit the application, and, for strainers 50 mm (2") diameter and larger, a blowdown pipe connection tapping.

.2 Manufacturers:

.1 Spirax Sarco Canada Ltd.;

.2 Toyo Valve Co, Ltd.;

.3 Armstrong International Inc.;

.4 Kitz Corp.;

.5 Watts Industries (Canada) Inc.;

.6 Mueller Steam Specialty Products.

.7 Steam Specialty Sales / Colton Industries

2.16 STEAM DRIP TRAPS

.1 Steam drip traps selected to suit inlet pipe size and inlet steam pressure, and as follows:

.1 Thermodynamic Traps:

.1 Maximum 4135 kPa (600 psi) rated, integral seat design stainless steel thermodynamic type traps, each complete with an integral strainer and insulating cover.

.2 Manufacturers:

.1 Spirax Sarco Canada Ltd. "TD" Series;

.2 Flowserve Gestra DK Series;

.3 Armstrong International Inc.

.4 Steam Specialty Sales / Colton Industries

.2 Float and Thermostatic Traps:

.1 Modulating discharge mechanical ball float type, each complete with a ductile or cast iron body, stainless steel trim, screwed or flanged ends as required, and an integral thermostatic air vent.

.2 Manufacturers:

.1 Spirax Sarco Canada Ltd "FT" Series;

.2 Flowserve Gestra UNA Series;

.3 Armstrong International Inc.

.4 Steam Specialty Sales / Colton Industries Model CFT/ FTX

2.17 STEAM VACUUM BREAKERS

.1 Screwed brass body vacuum breakers, each complete with screw-in brass cap, and stainless steel valve and valve seat.

.2 Manufacturers:

.1 Spirax Sarco Canada Ltd. Model VB14;

.2 Flowserve Gestra Type FVS;

.3 Armstrong International Inc.

.4 Steam Specialty Sales / Colton Industries

2.18 FLASH TANKS

.1 Factory made cylindrical flash tanks, each constructed of welded Schedule 40 seamless steel pipe with Schedule 40 seamless steel pipe caps for 1035 kPa (150 psi) steam service, each sized to pipe size and load by manufacturer, and each complete with a wear plate, Schedule 80 vent pipe connection flange, Schedule 160 threaded inlet connection, bottom drain coupling, mounting flange, an exterior coat of primer, correctly selected back pressure valve, safety valve, pressure gauge, and steam trap module.

.2 Manufacturers:

.1 Spirax Sarco Canada Ltd. Model FV;

.2 Flowserve Gestra Type HE;

.3 Armstrong International Inc.;

.4 Clemmer Pressure Vessel.

.5 Steam Specialty Sales / Colton Industries Model FT Series

2.19 CONDENSATE COOLER AND FLASH CONDENSERS

.1 Factory fabricated flash condensers, each constructed of welded steel, each suitable for wall or floor mounting as required, and each complete with:

.1 round type 304 stainless steel tank with mounting hardware;

.2 sensor and union kit assembly in cooled condensate outlet with capillary to cold water inlet;

.3 brass cold water inlet strainer, stainless steel check valve, and cold water spray nozzle with thermostatic control to permit a controlled volume of domestic cold water to quench flash steam as well as sub-cool condensate to maximum 65.5°C (150°F) before being dumped to drain.

.2 Manufacturers:

.1 Spirax Sarco Canada Ltd. JC200FCC;

.2 Flowserve Gestra;

.3 Armstrong International Inc.;

.4 Clemmer Technologies Inc.

.5 Steam Specialty Sales / Colton Industries

2.20 OVERPRESSURE TRIP VALVES

.1 Equal to Apollo Valves #88A-200 Series

.2 Spring return 120v electric actuator, spring close on loss of power or failure, suitable for all respects for application and valve.

.3 Tamper proof pressure switch equal to: Neodyne Model 130 P set @15 psig.

2.21 STEAM DRIP TRAP TESTING COMPONENTS

.1 Spirax Sarco Canada Ltd. "SPIRA-tec" steam drip trap testing components as follows:

.1 sensor chambers: ductile iron or steel sensor chambers as required, each compete with a stainless steel sensor element model “WLS1” and sensor plug gasket;

.2 “R1C” trap monitor with analogue and digital outputs for use by a building automation system.

.2 Manufacturers:

.1 Spirax Sarco Canada Ltd.;

2.22 STEAM TO GLYCOL HEATING SKID

.1 Components in the mechanical details on drawing MD00AT07 shall meet the requirements of the mechanical specifications in *23 57 00.00 – Heat Exchangers for HVAC* and *23 22 00.00 - Steam and Condensate Piping and Pumps.*

.2 Temperature Control:

.1 Temperature of Hot water shall be maintained by using two Globe Type Temperature Control Valve(TCV) .

.1 The TCVs shall be sized to 50 % each of the total load and operated as lead /lag configuration.

.2 TCV will be electrically operated 24 VAC fast acting actuator or pneumatically actuated with a SMART Positioner to receive a 4-12mA (lead) and 12-20mA (lag) signal from a controller.

.3 Refer to Specifications for Globe Type Control Valve Colton- FM Model FM100 for details on TCV constructional details.

.2 Temperature Sensing will be done by a RTD installed in the hot water outlet spool piece of the Heat Exchanger. Resistance temperature detectors (RTD) shall be 3-wire platinum type with 316 stainless steel probes complete with NEMA 4 aluminum head and must be installed at the hot liquid outlet with a 316 stainless steel thermowell.

.3 The temperature will be sensed continuously and controller output to TCV will be modulated to maintain the set point.

.3 Steam Trap Assembly

.1 Main steam trap shall be a Float & Thermostatic (F&T) type. Selection shall be made with 3:1 safety factor applied on the application condensate load.

.2 Strainer shall have a minimum mesh size 20 and installed upstream of the steam trap.

.3 Check valve shall be spring assisted non-slam in SS316 construction and installed downstream of the main steam trap.

.4 Control Panel

.1 Control panel shall be pre-assembled and pre-programmed at factory with set points and alarms. The cabinet shall be NEMA 4-12 and complete with Eurotherm Model EPC 3004 with pilot lights for high temperature alarm and power on, dry contacts enabling BAS connectivity. Supply voltage shall be120V/1/60. Set points shall be remotely adjustable. Control panel shall be CSA and UL listed.

.5 Piping and Frame

.1 Steam and water side piping shall be Carbon Steel seamless ASME SA 106 Gr, B.

.2 Carbon Steel frame shall have a heat resistant black paint.

2.23 Condensate Pump Set

.1 Package type condensate pump set with receiver and control in accordance with drawing schedule, complete with:

.1 vertical, centrifugal, bronze fitted pump(s) with a one-piece cast iron casing column, discharge pipe and elbow, and motor stand, an enclosed, machined bronze, hydraulically balanced impeller secured to a renewable stainless steel pump shaft, external stuffing box not subjected to discharge pressure, a non-metallic water lubricated lower submerged shaft bearing, and a 3600 RPM vertical motor conforming to requirements specified in Section 20 05 00 – Common Work Results for Mechanical;

.2 for single pump packages, a control assembly consisting of a heavy-duty 2-pole float switch actuated by a seamless copper float, all factory mounted and pre-wired;

.3 for duplex pump packages, a control assembly consisting of a heavy-duty 2-pole float switch actuated by a seamless copper float for each pump, and an alternator to alternate lead pump on each successive cycle, all factory mounted and pre-wired;

.4 McDonnell & Miller, Flow Tech Corp. "Flotect" or equal float actuated automatic reset alarm switch, minimum 690 kPa (100 psi) and 120°C (250°F) rated, capable of transmitting an alarm signal to an alarm device or a building automation system;

.5 cast iron or steel (depending on receiver capacity) condensate receiver with integral support legs for securement to a concrete pad, screwed type pipe connection and float switch tappings, and, for single pump tanks, a second blank flanged opening for a second future pump.

.2 Manufacturers:

.1 S.A. Armstrong Ltd.;

.2 ITT Bell & Gossett;

.3 Spirax Sarco Canada Ltd.;

.4 G.S. Dunham "MEPCO".

PART 3 - EXECUTION

3.1 DEMOLITION

.1 Perform required steam and condensate piping demolition/revision work. Refer to demolition requirements specified in Section 20 05 05 – Selective Demolition for Mechanical.

3.2 STEAM AND CONDENSATE PIPING INSTALLATION REQUIREMENTS

.1 Provide required steam and condensate piping.

.2 Piping, unless otherwise specified, is to be mild black steel, screwed for pipe to and including 50 mm (2") diameter, screwed or welded for pipe 65 mm (2-½") diameter and larger, and as follows:

.1 low pressure steam – screwed: Schedule 40, complete with Class 125 screwed fittings;

.2 high pressure steam – screwed: Schedule 40, complete with Class 250 screwed fittings;

.3 condensate, all pressures – screwed: Schedule 80, complete with Class 250 screwed fittings;

.4 low pressure steam – welded: Schedule 40 with butt weld fittings;

.5 high pressure steam – welded: Schedule 40 with butt weld fittings;

.6 condensate, all pressures welded: Schedule 80 with butt weld fittings.

.3 Unless otherwise specified, slope horizontal steam mains down 25 mm (1") in 6 m (20') in direction of flow. Steam mains may be run level if frequently and adequately dripped with equal tee connections and trapped at and through riser connections, however, slope such steam mains, if no branches are connected thereto for more than 7.5 m (25'), 25 mm (1") in a 6 m (20') as specified above. Provide equal tee drip stations every 36 m (120') to 45 m (150") in steam mains greater than 100 mm (4") diameter.

.4 Unless otherwise approved, slope horizontal condensate return mains 65 mm (2-½") diameter and larger 25 mm (1") in 6 m (20'). Slope smaller condensate return lines and condensate drip piping not less than 25 mm (1") in 3 m (10'). Slope condensate piping in direction of flow.

.5 Slope steam supply and condensate return branch connections to and from equipment a minimum of 25 mm (1") in 1.8 m (6'), slope being downward to risers to which branch piping connects. Increase this slope wherever necessary to prevent trapping due to expansion of risers, or provide steam drip trap assemblies.

.6 Extend branch steam supply piping off top of horizontal mains, either 90° vertically or at a 45° angle, as space permits.

.7 Make changes in pipe size in horizontal steam and condensate piping with eccentric fittings flush with the pipe on the bottom. Do not use bushings in any piping.

.8 Install automatic control valves, piping wells and similar piping and/or equipment mounted control components required for automatic temperature control systems and supplied as part of the control work. Refer to drawing control diagrams and details.

.9 Connect new air handling unit steam humidifiers with steam and condensate piping.

3.3 INSTALLATION OF UNIONS

.1 Provide screwed unions or weld-on flange joint unions in piping connections to valves, strainers and similar piping system components which may need maintenance or repair, at all equipment connections, in long runs of piping exceeding 9 m (30') at 4.5 m (15') intervals to permit removal of sections of piping, and wherever else indicated on drawings.

3.4 INSTALLATION OF SHUT-OFF VALVES

.1 Refer to Part 3 of Section 20 05 00 – Common Work Results for Mechanical.

.2 Valves in low pressure steam and condensate piping where a throttling or balancing action is required are to be globe type. All other valves are to be ball or gate type.

.3 Valves in high pressure steam and condensate piping where a throttling or balancing action is required are to be globe type. All other valves are to be gate type.

3.5 INSTALLATION OF CHECK VALVES

.1 Provide a check valve in discharge piping of each pump whether shown on drawings or not, and wherever else shown and/or specified on drawings.

3.6 INSTALLATION OF DRAIN VALVES

.1 Provide a drain valve at base of each piping riser, in drain connections to equipment, and wherever else shown and/or specified. At bottom of risers provide minimum 200 mm (8") long, minimum 25 mm (1") diameter capped dirt pockets with drain valves.

3.7 INSTALLATION OF FLEXIBLE PIPING CONNECTIONS

.1 Provide flexible connections in steam and feedwater connections to each steam boiler.

.2 Install flexible connections in accordance with manufacturer’s instructions.

3.8 INSTALLATION OF EXPANSION COMPENSATORS AND PIPE GUIDES

.1 Provide expansion compensation in piping. Install in accordance with manufacturer’s instructions. Secure guides to structure only, as coordinate and reviewed with Consultant.

.2 Generally, locate expansion compensation where shown, but with exact locations to suit piping as installed.

.3 Provide double pipe alignment guides in horizontal piping at each side of expansion compensation facilities to permit movement in axial direction only. Secure guides to building structure only.

.4 Provide a pipe guide at each side of expansion joints in vertical risers.

3.9 INSTALLATION OF PIPE ANCHORS

.1 Provide anchors to secure piping to structure. Locate anchors generally where shown but with exact locations to suit piping as installed and requirements of reviewed anchor shop drawings.

.2 When installation of anchors is complete, arrange, and pay for anchor design Structural Engineer to visit site to review anchor installation. Submit a signed letter from Design Engineer and bearing Engineer’s stamp confirming each anchor is properly installed in accordance with design requirements.

3.10 INSTALLATION OF STEAM SEPARATORS

.1 Provide a steam separator assembly with float and thermostatic steam trap module upstream of each steam pressure reducing station.

.2 Each separator is to be full line size of the pressure reducing station.

3.11 INSTALLATION OF STEAM PRESSURE REDUCING VALVES

.1 Provide steam pressure reducing valve stations and connect with piping, including a valved bypass.

.2 Check and adjust each station and set at required downstream pressure. Check relief valve operation and set to proper operating pressure.

3.12 INSTALLATION OF PRESSURE RELIEF VALVES

.1 Provide pressure relief valves. Pipe discharge of each steam safety relief valve to atmosphere through a properly sized drip pan elbow. Check and test the operation of all steam relief valves and adjust as required.

3.13 INSTALLATION OF DRIP PAN ELBOWS

.1 Provide a drip pan elbow as close as possible to the discharge of each steam pressure relief valve. Install each drip pan elbow in accordance with manufacturer's instructions. Provide drain piping at bottom of elbow, and ensure steam vent pipe to atmosphere is rigidly supported independent of drip pan elbow.

3.14 INSTALLATION OF AIR VENTS

.1 Provide proper air vents at the end of steam mains, and at the top of steam risers.

3.15 INSTALLATION OF STRAINERS

.1 Provide a strainer at each steam drip trap, and in piping. Locate strainers so baskets are easily removable. Clean strainer baskets after piping system flushing and cleaning is complete.

3.16 INSTALLATION OF STEAM DRIP TRAPS

.1 Provide a steam drip trap assembly in condensate return piping from each piece of equipment, at base of each riser, in horizontal steam mains as specified, and wherever it is necessary to raise piping to avoid a reduction in ceiling height or minimum headroom allowances. Size drip traps to correspond with condensate return piping sizes unless otherwise specified. Equip each drip trap with shut-off valve(s), 2 unions located immediately upstream and downstream of trap, a strainer, sensing chamber, and a dirt pocket.

.2 Unless otherwise specified, provide thermodynamic type drip traps in steam mains with a working pressure greater than 140 kPa (20 psi) and 140 kPa (20 psi) and greater piping to equipment.

.3 Unless otherwise specified, provide float and thermostatic type drip traps in low pressure steam mains with a working pressure less than 140 kPa (20 psi) and less than 140 kPa (20 psi) in piping to equipment.

.4 Connect low pressure condensate drip piping from steam drip trap assemblies into condensate return piping unless otherwise shown on drawings or specified herein. Do not connect condensate return piping into discharge of traps draining steam mains.

3.17 INSTALLATION OF STEAM VACUUM BREAKERS

.1 Provide vacuum breakers in steam inlet piping after each temperature control valve to closed steam actuated vessels such as coils and heat exchangers, and in steam piping wherever required to control induced vacuum within safety limits when condensate is discharged into return line by gravity. Mount each vacuum breaker vertically, unless otherwise specified.

3.18 INSTALLATION OF FLASH TANKS

.1 Provide flash tanks for high pressure condensate return or drip piping where shown and/or required. Extend and connect high pressure condensate return piping to flash tanks, and extend and connect low pressure condensate piping from flash tanks into a low pressure condensate return main.

3.19 INSTALLATION OF FLASH CONDENSERS

.1 Provide flash condensers to ensure condensate dumped to drain is maximum 60°C (140°F).

.2 Where domestic water connections are specified, coordinate installation with work of Section 22 11 00 – Facility Water Distribution.

3.20 INSTALLATION OF CONDENSATE PUMP SET

.1 Provide a condensate pump set.

.2 Secure receiver by means of anchor bolts to a concrete housekeeping pad.

.3 Connect receiver with 20 mm (¾") diameter valved condensate piping, vent piping the full size of the receiver vent tapping, 12 mm (½") diameter valved drain piping in receiver inlet piping ahead of shut-off valve, and overflow piping connected to drain piping downstream of drain valve. Connect pump discharge condensate return piping containing a shut-off valve and a check valve, and a 20 mm (¾") diameter drain valve immediately downstream of shut-off valve.

.4 Check operation of each float valve and adjust as required.

.5 Check operation of duplex set alternator and adjust as required.

3.21 EQUIPMENT CERTIFICATION, START-UP, AND TRAINING

.1 For piping specialties such as steam trap testing equipment, pumps, flow meters, and similar items, include for each item or group of similar items, manufacturer's on-site certification, start-up, and O&M training as follows:

.1 For equipment/system manufacturer certification requirements, refer to Section 20 05 00 – Common Work Results for Mechanical.

.2 For equipment/system start-up requirements, refer to Section 20 05 00 – Common Work Results for Mechanical.

.3 Include for 4 hours of on-site operation demonstration and training session. Training is to be a full review of all components including but not limited to a full operation and maintenance demonstration, with abnormal events.

3.22 FLUSHING AND CLEANING PIPING

.1 Flush and clean new piping in accordance with requirements specified in Section 23 25 00 – HVAC Water Treatment.

3.23 TESTING, ADJUSTING, AND BALANCING

.1 When work is complete and equipment is operating as intended, test, adjust and balance water flows in accordance with requirements specified in Section 20 05 93 – Testing, Adjusting, and Balancing for Mechanical Systems.

3.24 INSTALLATION OF STEAM DRIP TRAP TESTING COMPONENTS

.1 Provide a drip trap testing sensor chamber in piping upstream of each trap to be tested.

.2 Provide sensor element and trap monitor for each sensor chamber

.3 Coordinate with controls contractor to connect trap monitor to building automation system.

3.25 INSTALLATION STEAM TO GLYCOL HEATING SKID

.1 Provide required steam to glycol heating skid as per drawing schedules and details.

.2 Provide necessary start up services and 1 day of training.

END OF SECTION

PART 1 - GENERAL

1.1 SECTION INCLUDES

.1 HVAC water-treatment systems.

.2 Chemical treatment test equipment.

.3 HVAC water-treatment chemicals.

1.2 SUBMITTALS

.1 Submit shop drawings/product data sheets for all water treatment chemical feed equipment and associated hardware.

.2 Submit product literature sheets for all chemicals, as well as WHMIS Material Safety Data Sheets for all chemicals.

1.3 CLOSEOUT SUBMITTALS

.1 Submit water treatment manufacturer/supplier certification letters as specified in Part 3 of this section.

.2 Training attendance records.

1.4 MAINTENANCE MATERIAL SUBMITTALS

.1 Submit water treatment test sets and spare chemicals as specified below and in Part 3 of this section.

PART 2 - PRODUCTS

2.1 CHARACTERISTICS OF CHEMICALS AND SPARE CHEMICALS

.1 Chemicals specified in this section are to be non-toxic when released to atmosphere, non-corrosive, and non-staining if a leak occurs, and compatible with all system components.

.2 Chemicals must be approved by governing authorities for release into Municipal sewer system.

2.2 EXISTING TREATMENT SYSTEMS

.1 Owner has a contract with a treatment chemical supplier to maintain proper levels of chemical in building systems. New chemicals and/or treatment delivery hardware are to be supplied by this supplier.

.2 PMC Water Systems (Barry MacDonald - barrymacdonald@pmcwatersystems.com).

2.3 PIPING SYSTEM FLUSHING AND CLEANING CHEMICAL

.1 Liquid form alkaline type cleaner consisting of a concentrated blend of highly active penetrating agents and detergents with a 12.5 pH and specifically formulated to remove oil, mill scale and oxides from piping and equipment.

2.4 CLOSED HEAT TRANSFER SYSTEM TREATMENT

.1 Chemicals, chemical feed equipment, and test equipment to control corrosion in closed heat transfer circulating systems as indicated on drawings and as specified below.

.2 Enamelled steel or cast iron by-pass feeders sized as shown, 2060 kPa (300 psi) rated and complete with 20 mm (¾") diameter NPT pipe connection tappings, and a screw-on cast iron cap with "Buna N" "O" ring seal.

.3 By-pass filter and flow indicator assembly equal to a Shelco Inc. FOS78, 1725 kPa (250 psi) rated replaceable cartridge filter assembly with a stainless steel housing and 20 mm (¾") diameter piping connections, sized for approximately 5% of rated circulating pump flow and complete with a minimum of 6, 20 micron filter cartridges, and a sight flow indicator equal to an Anderson Midwest Model 350SS with 20 mm (¾") diameter piping connections.

.4 Piping tee mounting coupon holders, each complete with 25 mm (1") diameter NPT plugs with a minimum of one coupon for copper and one coupon for steel.

.5 Chromate free, nitrite/borate type corrosion inhibitor suitable for use with both ferrous and non-ferrous metals.

.6 Test kit for measuring inhibitor level.

PART 3 - EXECUTION

3.1 PIPING SYSTEM FLUSHING AND CLEANING

.1 After new heat transfer system piping has been installed and leakage testing has been satisfactorily completed, but before mechanical equipment start-up and performance tests, flush and chemically clean piping systems.

.2 Provide required temporary piping connections, including bypass piping to isolate dirt sensitive mechanical plant equipment. Remove instrumentation such as flow meters and switches, orifice plates, meter valves and similar devices and plug pipe openings. Reinstall when flushing and cleaning work has been certified complete by chemical manufacturer/installer. Ensure control valves are operational and fully open during flushing and cleaning.

.3 Prior to chemical cleaning, flush piping, including dead ends, with water to remove loose solids. Clean all strainers. Replace chemical feeder line filters as required. Flush and drain until water runs clear.

.4 When flushing with water is complete, fill systems with fresh clean water. Meter amount of water required to fill each system or otherwise calculate system capacity. Ensure all air is vented from systems. Add cleaning chemical as instructed by chemical manufacturer and circulate solution for a period of time and at a temperature as required to produce a clean piping system. Conduct daily pH, conductivity, and total iron tests in accordance with chemical supplier’s instructions.

.5 After chemical cleaning when test results indicate a clean system, drain solution from piping, refill with clean water and circulate water for a minimum of 24 hours to flush out remaining chemical solution, then drain water from piping using all drain points and again clean all system strainers and replace filters. Arrange for chemical supplier to check each system after flushing and cleaning is complete and to certify in writing that flushing and cleaning procedures have been properly performed. Submit a copy of the certification letter. Fill systems.

3.2 INSTALLATION OF CLOSED HEAT TRANSFER SYSTEM TREATMENT

.1 After flushing and cleaning procedures have been certified complete, provide a by-pass chemical feeder, a cartridge filter assembly, and corrosion test coupons for each closed heat transfer system. Install in accordance with requirements of drawing details.

.2 Supply and feed into each system sufficient chemical to charge system to proper concentrations of chemical, and maintain proper levels in system until Substantial Performance of the Work.

3.3 MANUFACTURER'S CERTIFICATION, START-UP, AND TRAINING

.1 For all water treatment equipment include for on-site certification, start-up supervision, and system training by treatment chemical manufacturer's representative as follows:

.1 For equipment/system manufacturer certification requirements, refer to Section 20 05 00 – Common Work Results for Mechanical;

.2 For equipment/system start-up requirements, refer to Section 20 05 00 – Common Work Results for Mechanical;

.3 Include for 4 hours of on-site operation demonstration and training session. Training is to be a full review of all components including but not limited to a full operation and maintenance demonstration, with abnormal events.

END OF SECTION

PART 1 - GENERAL

1.1 SECTION INCLUDES

.1 HVAC ducts and casings.

.2 Acoustic duct lining material.

.3 Special systems ductwork.

.4 Dampers.

.5 Louvres.

.6 Other duct work accessories.

1.2 SUBMITTALS

.1 Submit shop drawings/product data sheets for all products specified in this section except shop fabricated ductwork and fittings.

.2 Include capacity, throw and terminal velocity, noise criteria, and pressure drops with grille and diffuser shop drawing/product data sheet submission.

.3 With shop drawing/product data sheet submission, supply evidence that fire rated duct manufacturer is ULC listed to size requirements shows on drawings.

.4 Submit duct leakage test data prior to ductwork being covered from view.

.5 Submit manufacturer’s colour chart(s) for all items for which a finish colour is to be selected.

1.3 CLOSEOUT SUBMITTALS

.1 Submit proper installation certification from fire rated duct manufacturer as specified in Part 3 of this section.

.2 Submit a site inspection and start-up report from fan filter diffuser manufacturer’s representative as specified in Part 3 of this section.

1.4 MAINTENANCE MATERIAL SUBMITTALS

.1 Supply and hand to Owner at Substantial Performance of the Work, a minimum of 10 identified (with tags) grille/diffuser volume control damper adjustment keys.

1.5 COORDINATION

.1 Supply reviewed copies of ventilator/curb assembly shop drawings or product data sheets to trade who will cut roof openings for ventilators, and ensure openings are properly sized and located.

1.6 QUALITY ASSURANCE

.1 Grilles and diffusers are to be tested and performance certified to ANSI/ASHRAE 70, Method of Testing the Performance of Air Outlets and Air Inlets.

PART 2 - PRODUCTS

2.1 GALVANIZED STEEL DUCTWORK

.1 Galvanized steel sheet is to be hot dipped in accordance with requirements of ASTM A653. G60 galvanizing for bare uncovered duct to be finish painted. G90 for all other galvanizing.

.2 Rectangular

.1 Lock forming grade hot dip galvanized steel, ASTM A653, shop fabricated, minimum #26 gauge.

.3 Round

.1 Factory machine fabricated, spiral, mechanically locked flat seam, single wall duct, fittings and couplings.

.4 Flat Oval

.1 Factory machine fabricated, single wall, 4-ply spiral lock seam duct, fittings and couplings.

2.2 RECTANGULAR ALUMINUM DUCTWORK

.1 Alloy 3003 Temper H14 aluminum, ASTM B209, shop or factory fabricated, water-tight, with metal gauges and fabrication in accordance with ANSI/SMACNA HVAC Duct Construction Standards Metal and Flexible to suit the duct working pressure classification, and type 316 stainless steel support hardware.

2.3 ROUND ALUMINUM DUCTWORK

.1 Alloy 3003 Temper H14 aluminum, ASTM B209, factory fabricated, water-tight, smooth interior, single wall duct, and fittings of spiral lockseam construction with site sealed beaded sleeve (slip type) joints, all in accordance with ANSI/SMACNA HVAC Duct Construction Standards Metal and Flexible to suit duct working pressure classification, and type 316 stainless steel sheet metal screws and support hardware.

2.4 RECTANGULAR STAINLESS STEEL DUCTWORK

.1 300 Series stainless steel, type 304 or type 316 as specified in Part 3 of this Section, ASTM A167 and ASTM A480, with a #4 finish where bare (uncovered) and exposed in finished areas and a #2B finish elsewhere, with, unless otherwise specified, metal gauges in accordance with ANSI/SMACNA HVAC Duct Construction Standards Metal and Flexible to suit duct location and working pressure classification, and stainless steel support hardware to match duct material.

2.5 ROUND STAINLESS STEEL DUCTWORK

.1 Factory made, spiral, mechanically locked flat seam, single wall duct fabricated from type 316 stainless steel to ASTM A240 with metal gauges in accordance with ANSI/SMACNA HVAC Duct Construction Standards Metal and Flexible for 2.5 kPa (0.36 psi) pressure. Type 316 stainless steel fittings equipped with leak-proof stainless steel couplings secured to connecting duct by means of stainless steel sheet metal screws and duct sealer. Duct system performance is to meet SMACNA's Leakage Class 3 requirements at system design static pressure. Stainless steel finish is to be a #2B mill finish where concealed or exposed in unfinished areas and a #4 finish where exposed in finished areas.

2.6 FLEXIBLE METALLIC DUCTWORK

.1 Bare

.1 Spirally wound, semi-rigid, self-supporting corrugated aluminum duct with continuous triple lock seams, SMACNA Form "M-UN", CAN/ULC-S110 listed and labelled as a Class 1 Air Duct, constructed of dead soft aluminum strip, and supplied in 3 m (10') lengths.

.2 Insulated

.1 Spirally wound, semi-rigid, self-supporting corrugated aluminum duct with continuous triple lock seams, SMACNA Form "M-I", CAN/ULC-S110 listed and labelled as a Class 1 Air Duct, constructed of dead soft aluminum strip, supplied in 3 m (10') lengths and factory covered with

40 mm (1-½") thick, 12 kg/m3 (0.75 lb/ft³) density fibreglass insulation with a vinyl jacket meeting 25/50 flame spread and smoke developed requirements tested in accordance with CAN/ULC-S102.

2.7 FLEXIBLE CONNECTION MATERIAL

.1 Waterproof, indoor-outdoor type flexible connection material meeting requirements of NFPA 90A, consisting of woven glass fibre fabric coated on both sides with synthetic rubber.

.2 Manufacturers:

.1 Duro Dyne Canada Inc. "DUROLON";

.2 Dyn Air Inc. "HYPALON".

.3 Waterproof, flameproof, high temperature flexible connection material meeting requirements of NFPA 90A, consisting of a woven glass fibre fabric coated on both sides with silicone rubber.

.4 Manufacturers:

.1 Duro-Dyne Canada Inc. "THERMAFAB";

.2 Dyn Air Inc. "SILICON HI-T".

2.8 METAL DUCT SYSTEM JOINT SEALANT

.1 ULC listed and labelled, premium grade, grey colour, water base, non-flammable duct sealer, brush, or gun applied, with a CAN/ULC S102 tested maximum flame spread rating of 5 and smoke developed rating of 0.

.2 Manufacturers:

.1 Johns Manville;

.2 Manson Insulation;

.3 Knauf Insulation.

2.9 CASING AND PLENUM MATERIAL AND ACCESSORIES

.1 Unless otherwise specified, casing and plenum material is to be same as connecting duct material.

.2 Accessories such as access doors and drain pans are to be constructed of same material as casing and plenum and are to be in accordance with Chapter 6 of SMACNA HVAC Duct Construction Standards Metal and Flexible.

2.10 ACOUSTIC PLENUM PANELS

.1 Vibro-Acoustics Ltd. type "AP", 100 mm (4") thick panels with acoustic media meeting NFPA 90A requirements sandwiched between minimum #24 gauge galvanized sheet steel, with airside face perforated, access doors where shown, and with acoustic performance as follows:

Octave Bands, (Hz)	125	250	500	1000	2000	4000
Transmission Loss	21	28	39	50	53	56
Absorption Coefficient	0.7	0.9	0.99	0.99	0.9	0.9

.2 Acoustic plenum media factory encapsulated in sealed DuPont "Tedlar" polyvinyl fluoride film to ensure no media enters the airstream.

.3 Manufacturers:

.1 Vibro-Acoustics Ltd.;

.2 Kinetics Noise Control Inc.;

.3 Carrier Corp. – Racan;

.4 Haakon Industries;

.5 Price Industries Inc;

.6 Alumavent.

2.11 PLENUM ACCESS DOORS

.1 Factory fabricated, double wall insulated access doors, sized as indicated on drawings, and constructed of same material as connecting ductwork in accordance with ANSI/SMACNA HVAC Duct Construction Standards Metal and Flexible to suit operating pressure of the system.

2.12 ROUND TO RECTANGULAR DUCT CONNECTIONS

.1 Equal to Flexmaster Canada Ltd. galvanized steel, flared, flanged or notched "Spin-On" round duct take-off collars with locking dampers in accordance with ANSI/SMACNA HVAC Duct Construction Standards Metal and Flexible.

2.13 SPLITTER DAMPERS

.1 Minimum #20 gauge damper blade constructed of same material as duct, reinforced as required to suit blade size, system velocity, and to prevent "chatter", and complete with operating hardware equal to DynAir Inc. #Q-50 "DYN-A-QUAD S-S" quadrant regulator with RW-50 backup washers to prevent leakage, long square bearing pin, and slide pin.

2.14 AIR TURNING VANES

.1 For square elbows, multiple-radius turning vanes interconnected with bars, adequately reinforced to suit pressure and velocity of system, constructed of same material as duct they are associated with, and in accordance with ANSI/SMACNA HVAC Duct Construction Standards Metal and Flexible.

.2 For short branch ducts at grille and diffuser connections, air extractor type each equipped with a matching bottom operated 90° opposed blade volume control damper, constructed of same material as duct it is associated with and in accordance with requirements and details in ANSI/SMACNA HVAC Duct Construction Standards Metal and Flexible.

2.15 MANUAL BALANCING (VOLUME) DAMPERS

.1 Flanged and drilled, single or parallel blade (depending on damper size) manual balancing dampers, each constructed of same material as connecting ductwork unless otherwise specified, each designed to maintain internal free area of connecting duct, and each complete with:

.1 hexagonal or square shaft extension through frame;

.2 non-stick, non-corrosive synthetic bearings for rectangular dampers, flange stainless steel bearings for round dampers;

.3 blade stops for single blade dampers, designed to prevent blade from moving more than 90°;

.4 linkage for multiple blade dampers;

.5 locking hand quadrant damper operator with, for insulated ducts 50 mm (2") standoff mounting.

.2 Rectangular Dampers: Nailor Industries Inc. 1800 Series, maximum size 1.2 m x 1.2 m (4' x 4') for a single damper.

.3 Round Dampers: Nailor Industries Inc. model 1890, maximum 600 mm (24") diameter, equipped with a minimum 200 mm (8") deep frame, and blade stiffeners where required.

.4 Multiple Rectangular Damper Section Assembly: Rectangular assembly supplied with the dampers or site constructed, of same material as damper and designed for tight and secure mounting of individual dampers.

.5 Manufacturers:

.1 Nailor Industries Inc.;

.2 T.A. Morrison & Co. Inc. "TAMCO";

.3 Greenheck Fan Corp.;

.4 Ruskin Co.

2.16 BACKDRAFT DAMPERS

.1 Nailor Industries Model 1370CB counterbalanced backdraft dampers, vertical or horizontal mounting, 50 mm (2") wide, sized as shown and complete with:

.1 extruded 6063-T5 aluminum frame, 2.3 mm (0.090") nominal wall thickness, with mitred corners;

.2 extruded 6063-T5 aluminum blades, 1.3 mm (0.050") nominal wall thickness on 92 mm (3-5/8") centres, and with extruded PVC blade seals;

.3 corrosion-resistant synthetic bearings;

.4 adjustable plated steel counterweights mounted internally in the airstream;

.5 concealed blade linkage located out of the airstream.

.2 Manufacturers:

.1 Nailor Industries Inc.;

.2 T.A. Morrison & Co. Inc. "TAMCO";

.3 Greenheck Fan Corp.;

.4 Ruskin Co.

2.17 FUSIBLE LINK DAMPERS

.1 Curtain blade type, dynamic, galvanized steel (unless otherwise specified) fusible link dampers, ULC classified to CAN/ULC S112 and in accordance with NFPA 90A requirements, factory tested for closure under airflow, 1-1/2 hour or 3 hour rated as required, and complete with a constant force type 301 stainless steel closure spring, a blade lock assembly, a steel sleeve, retaining angles, and, unless otherwise specified, a 74°C (165°F) rated standard fusible link.

.2 Fusible link dampers are to be Type "B" or Type "C" (as required) with folded curtain blade out of air stream except where damper size or location requires use of type "A" dampers with curtain blade in air stream.

.3 Dampers in ductwork other than galvanized steel are to be as specified above but constructed of type 316 stainless steel.

.4 Manufacturers:

.1 Nailor Industries Inc.;

.2 Greenheck Fan Corp.;

.3 Ruskin Co.;

.4 Price Industries (E.H. Price).

2.18 COMBINATION FIRE/SMOKE DAMPERS

.1 Nailor Industries Series 1221, ULC listed to CAN/ULC S112 and CAN/ULC S112.1, meeting requirements of NFPA 80, 90A, 92, 101 and 105, consisting of type A, B, or C fusible link fire dampers as required and a fail-safe, opposed blade, normally closed, motor operated smoke damper complete with factory installed and tested 120 V electric actuator.

.2 ULC 1-1/2 hour fire rated and ULC Class I leakage rated for smoke, and equipped with a 74°C (165°F) ULC classified fusible link that will cause damper to close and lock independent of actuator when duct temperature reaches maximum temperature of damper assembly.

.3 Supply damper with factory installed sleeves of minimum 400 mm (16") length, field verified by contractor dependent on wall thickness. Caulk sleeves to ULC requirements and constructed of 20 gauge for sizes up to 2.1 m (84") wide and 18 gauge for sizes greater than 2.1 m (84") wide.

.4 Dampers in ductwork other than galvanized steel are to be as specified above but constructed of type 316 stainless steel.

.5 Manufacturers:

.1 Nailor Industries Inc.;

.2 Greenheck Fan Corp.;

.3 Ruskin Co.;

.4 Price Industries (E.H. Price).

2.19 SMOKE DAMPERS

.1 Multi-blade type, fail-safe, dynamic, galvanized steel (unless otherwise specified) smoke dampers, ULC classified to CAN/ULC S112.1, ULC Class I leakage rated for smoke, meeting requirements of NFPA 90A, 92, 101 and 105, normally closed, low pressure drop design, dynamically tested, each complete with jamb and blade seals, linkage concealed in the frame, a steel sleeve to suit the opening, and an electric actuator to automatically close damper upon receiving an external signal, and to automatically open damper when system is reset.

.2 Dampers in ductwork other than galvanized steel are to be as specified above but constructed of type 316 stainless steel.

.3 Manufacturers:

.1 Nailor Industries Inc.;

.2 Greenheck Fan Corp.;

.3 Ruskin Co.;

.4 Price Industries (E.H Price).

2.20 ROOF DUCT SUPPORTS

.1 Equal to PHP Systems Design Model PHP-D adjustable duct support assemblies sized to suit duct size, each assembly complete with injection moulded recycled plastic and carbon black bases and tubular hot dip galvanized steel framing.

2.21 PRESSURE RELIEF DOORS

.1 Greenheck model PRAD (positive) or VRAD (negative) pressure relief doors constructed of same material as duct or plenum they are associated with, each complete with a sealing gasket, special latches, cable assembly with spring to limit door opening to maximum 80° and factory set, field adjustable pressure relief magnet assembly.

.2 Size access doors to match requirements of system so pressure drop through open blow-out door at required flow rate will not exceed rated pressure of duct system.

.3 Manufacturers:

.1 Greenheck Fan Corp.;

.2 United Enertech.

2.22 DUCT ACCESS DOORS

.1 In accordance with ANSI/SMACNA HVAC Duct Construction Standards Metal and Flexible, with sizes suitable in all respects for purpose for which they are provided, and, unless otherwise specified, constructed of same material as duct they are associated with.

2.23 DUCTWORK DRAIN POINTS

.1 Equal to Ductmate Canada Ltd. "Moisture Drain", 20 mm (¾") diameter moisture drains with galvanized sheet metal funnel, and chrome plated brass threaded drain, nut, and cap.

2.24 INSTRUMENT TEST PORTS

.1 Equal to Duro-Dyne of Canada Ltd. #IP1 or #IP2 (to suit insulation thickness where applicable) gasketed, leakproof instrument test ports for round or rectangular ducts as required, each complete with a neoprene expansion plug and a plug securing chain.

2.25 WIRE MESH (BIRDSCREEN)

.1 Heavy-gauge galvanized steel or aluminum mesh, 12 mm x 12 mm (½" x ½") secured in a rigid galvanized steel or aluminum framework, sized as indicated on drawings, and constructed so as to be removable.

2.26 FIRE STOP FLAPS AND THERMAL BLANKET MATERIAL

.1 Rectangular or round, ULC listed and labelled, blade type galvanized steel fire stop flaps in accordance with CAN/ULC S112, Standard Methods of Fire Test of Fire-Damper Assemblies and CAN/ULC S112.2, Standard Method of Fire Test of Ceiling Firestop Flap Assemblies, each complete with #22 gauge G60 galvanized steel blade(s) and frame, a 74°C (165°F) fusible link, and, for dampers 300 mm (12") and larger, ceramic fibre insulation on both sides of the blades.

.2 Ceramic fibre material in accordance with 25/50 flame spread/smoke developed ratings when tested to CAN/ULC S102 and of a thickness to suit required fire rating.

2.27 GRILLES AND DIFFUSERS

.1 Grilles and diffusers of type, size, capacity, finish, and arrangement as shown on drawings and in accordance with drawing schedule, each equipped with all required mounting and connection accessories to suit mounting location and application.

.2 Manufacturers:

.1 Price Industries Inc.;

.2 Anemostat;

.3 Krueger Division of Air System Components Inc.;

.4 Titus;

.5 Nailor Industries Inc.;

.6 Tuttle & Bailey.

2.28 EXHAUST WALL BOX

.1 Equal to Reversomatic SWBL wall boxes leakproof seamless construction, extruded aluminum grille, sized as shown, complete with stainless steel fasteners, neoprene backdraft damper, and all required accessories to suit the application. Contractor to coordinate colour and finish with colour as selected from manufacturer's standard colour range as noted in schedule.

PART 3 - EXECUTION

3.1 CLEANLINESS REQUIREMENTS FOR HANDLING AND INSTALLATION OF DUCTWORK

.1 Handle and install ductwork in accordance with CSA Z317.2, Special Requirements for Heating, Ventilation, and Air-Conditioning (HVAC) Systems in Healthcare Facilities and SMACNA's Duct Cleanliness for New Construction Guidelines at the Advanced Level.

.2 Handle and install ductwork in accordance with SMACNA's Duct Cleanliness for New Construction Guidelines at the Advanced Level.

3.2 FABRICATION AND INSTALLATION OF GALVANIZED STEEL DUCTWORK

.1 Provide required ductwork, rectangular, round and/or flat oval. Where rectangular ductwork is shown, round or flat oval ductwork of equivalent cross-sectional area is acceptable.

.2 It is to be understood that all duct dimensions shown on drawings are clear internal dimensions.

.3 Unless otherwise specified, construct and install ductwork in accordance with ANSI/SMACNA HVAC Duct Construction Standards Metal and Flexible to suit duct pressure class designation of minimum 500 Pa (2" w.c.) positive or negative as applicable, a minimum velocity of 10 m/s (2000 fpm), and so ductwork does not "drum". Flat surfaces of rectangular ductwork are to be cross-broken or beaded per SMACNA standards. Duct system sealing is to meet ANSI/SMACNA Seal Class A requirements.

.4 Confirm routing of all ductwork at site and site measure ductwork prior to fabrication. Duct dimensions may be revised to suit site routing and building element requirements, if dimension revisions are reviewed with and approved by the Consultant. Duct routing and/or dimension revisions to suit conditions at site are not grounds for a claim for an extra cost.

.5 Refer to structural drawings. Where ductwork is to be run within or through open web steel joists, ductwork shown on mechanical drawings is schematic only and is to be altered as required to suit steel joist configuration, spacing, panel points, and cross-bridging at no additional cost.

.6 Wherever ductwork is required at locations where sprayed fireproofing is applied to building construction, install ductwork only after fireproofing work is complete and do not compromise fire rating of sprayed fireproofing.

.7 Install (but do not connect) duct system mounted automatic control components supplied as part of the automatic control work.

.8 Where indicated, provide duct connections to fan powered heat transfer equipment with integral coils.

.9 Flange connect ductwork to hot water reheat coils in accordance with requirements of ANSI/SMACNA HVAC Duct Construction Standards Metal and Flexible. Coils will be suspended independent of connecting ductwork as part of the heat transfer work.

.10 Support horizontal rectangular ducts inside building in accordance with ANSI/SMACNA HVAC Duct Construction Standards Metal and Flexible, but use trapeze hangers with, unless otherwise

specified, galvanized steel channels, and galvanized steel hanger rods for exposed ducts and concealed ducts wider than 500 mm (20"). Support hardware constructed of same material as duct for metal duct, and, unless otherwise specified, type 316 stainless steel for non-metal duct. Supports for "heavy" duct such as cementitious core duct is to be suitable in all respects for the application and approved by the Consultant.

.11 Support round and flat oval ducts inside building in accordance with ANSI/SMACNA HVAC Duct Construction Standards Metal and Flexible, but, unless otherwise specified, for both uninsulated and insulated ducts exposed in finished areas, use bands and secure at top of duct to a hanger rod, all similar to Ductmate Canada Ltd. type "BA". If duct is insulated, size strap to suit diameter of insulated duct. Unless otherwise specified, duct support hardware for metal duct is constructed of same material as duct, and for non-metal duct, type 316 stainless steel.

.12 Where flanged duct joints are used, do not locate joints in wall or slab openings, or immediately at wall or slab openings. Do not use flanged joints for exposed uninsulated ducts in finished areas.

.13 Where watertight horizontal ductwork is required, construct ducts without bottom longitudinal seams. Solder or weld joints of bottom and side sheets. Seal all other joints with duct sealer. Slope horizontal duct to hoods, risers, or drain points. Provide drain points. Provide watertight ductwork for:

.1 ductwork outside building or otherwise exposed to the elements;

.2 dishwasher exhaust;

.3 fresh air intakes;

.4 wherever else shown.

.14 Seal all ductwork in accordance with SMACNA Seal Class "A", except for round duct with self-sealing gasketed fittings and couplings which does not require site applied sealant. Apply sealants by brush or gun to cleaned metal surfaces. Where bare ductwork is exposed apply neat uniform lines of sealant. Randomly brushed, sloppy looking sealant applications will be rejected and must be repaired or replaced with a neat application of sealant.

.15 Apply sealants by brush or gun to cleaned metal surfaces. Where bare ductwork is exposed apply neat uniform lines of sealant. Randomly brushed, sloppy looking sealant applications will be rejected and must be repaired or replaced with a neat application of sealant.

.16 Clean exterior exposed (uninsulated) ducts and coat with a heavy full coverage of Bakor #410-02 black metal paint.

.17 Where dissimilar metal ducts are to be connected, isolate ducts by means of flexible duct connection material.

3.3 INSTALLATION OF ALUMINUM DUCTWORK

.1 Provide aluminum ductwork, rectangular or round.

.2 Provide aluminium ductwork for:

.1 [ ];

.2 [ ].

.3 Wherever bare aluminum ductwork comes in contact with ferrous metal or copper, paint ferrous metal or copper surface with a heavy, 100% covering coat of zinc chromate paint, asphalt paint or otherwise isolate direct contact with the bare aluminum.

.4 Refer to "Commentary on Aluminum Ducts" in ANSI/SMACNA HVAC Duct Construction Standards Metal and Flexible, however, do not use drive and S cleats for joining waterproof aluminum ductwork. Use following SMACNA joining methods:

.1 T-21 - welded flange;

.2 T-22 - companion angle and gasket;

.3 T-24A - flanged.

.5 Keep longitudinal joints at top surface of horizontal runs. Provide proper transverse supports to prevent deflection. Ensure duct is rigid.

.6 When mastic is used for sealing such as sealing longitudinal joints, apply mastic to both surfaces before they are mated. When dry, apply mastic again for a water-tight seal.

3.4 INSTALLATION OF STAINLESS STEEL DUCTWORK

.1 Provide stainless steel ductwork, round or rectangular.

.2 Provide stainless steel ductwork as follows:

.1 [ ];

.2 [ ].

.3 Exposed stainless steel kitchen exhaust duct is to be minimum #16 gauge and of welded construction with pickled and passivated welds which are ground to a finish to match duct finish.

3.5 INSTALLATION OF FLEXIBLE DUCTWORK

.1 For supply air ductwork, provide maximum 1.8 m fully stretched, long lengths of flexible ductwork for connections between galvanized steel duct mains and branches, and necks of ceiling grilles and diffusers. Do not install flexible ductwork through walls, even if shown on drawings.

.2 At rectangular galvanized steel duct, accurately cut holes and provide flanged or "Spin-in" round flexible duct connection collars. Seal joints with duct sealer.

.3 Install flexible ducts as straight as possible and support in accordance with requirements of ANSI/SMACNA HVAC Duct Construction Standards Metal and Flexible, and secure at each end with nylon or stainless steel gear type clamps, and seal joints. Provide long radius duct bends where they are required.

.4 Do not penetrate fire barriers with flexible duct.

3.6 INSTALLATION OF CASINGS AND PLENUMS

.1 Provide required shop or site fabricated casings and plenums. Unless otherwise specified or shown, construct casings and plenums of same material as connecting duct system.

.2 Construct and install casings and plenums in accordance with Chapter 6 of ANSI/SMACNA HVAC Duct Construction Standards Metal and Flexible to suit systems' pressure classification. Ensure plenums and casings secured to building structure are gasketed air-tight and equipped with angle reinforcing.

.3 Provide drain pans with accessible trapped drains for fresh air intake plenums, and wherever else shown.

3.7 INSTALLATION OF CASING AND PLENUM ACCESS DOORS

.1 Provide access doors into all site or shop fabricated casings and plenums requiring access, and wherever shown.

.2 Construct access doors to open in or out to suit positive and negative pressures of system.

.3 Provide pitot tube openings in access doors where required for system air quantity balancing purposes.

.4 Provide suitably sized, engraved, red-white laminated Lamacoid warning nameplates on access doors into casings and plenums where equipment is located, i.e. fans.

3.8 INSTALLATION OF ROUND TO RECTANGULAR DUCT CONNECTIONS

.1 Cut round holes in rectangular ducts and provide round to rectangular lock-in fittings with dampers for connection of flexible round ductwork.

3.9 INSTALLATION OF SPLITTER DAMPERS

.1 Provide splitter dampers in supply ductwork at branch duct connections off supply air mains, and wherever else shown and/or specified on drawings. Install splitter dampers so they cannot vibrate and rattle and so damper operation mechanisms are in an easily accessible and operable location. Ensure operators for dampers in insulated ducts are equipped with stand-off mounting brackets.

3.10 INSTALLATION OF TURNING VANES

.1 Provide turning vanes in ductwork elbows where shown on drawings and wherever else required where, due to site installation routing and duct elbow radius, turning vanes are recommended in accordance with ANSI/SMACNA HVAC Duct Construction Standards Metal and Flexible.

.2 Provide volume extractor type turning vanes in short branch supply duct connections off mains to grilles and diffusers where shown and/or specified.

3.11 INSTALLATION OF MANUAL BALANCING (VOLUME) DAMPERS

.1 Provide manual balancing dampers as required to provide a fully balanced system, including but not limited to in all open end ductwork, in all duct mains, and wherever else shown and/or specified.

.2 Install dampers so operating mechanism is accessible and positioned for easy operation, and so dampers cannot move or rattle. Ensure operating mechanisms for dampers in insulated ducts are complete with stand-off mounting brackets.

.3 Where a duct for which a balancing damper is required has dimensions larger than dimensions of maximum size volume damper available, provide multiple dampers bolted together in a properly sized assembly, or bolted to a heavy-gauge black structural steel angle or channel framework which is properly sized. Seal to prevent air by-pass, and provide connecting linkage.

.4 Confirm exact damper locations with personnel doing air quantity balancing testing work and install dampers to suit. Include for providing 5 additional dampers at no additional cost.

3.12 INSTALLATION OF BACKDRAFT DAMPERS

.1 Provide backdraft dampers.

.2 Install and secure dampers so they cannot move or rattle.

3.13 INSTALLATION OF FUSIBLE LINK DAMPERS

.1 Provide fusible link dampers. Ensure damper rating (1-½ or 3 hr) is suitable for fire barrier it is associated with.

.2 Install dampers with retaining angles on all 4 sides of sleeve on both sides of damper and connect with ductwork in accordance with damper manufacturer's instructions and details, and Code requirements.

.3 Provide expansion clearance between damper or damper sleeve and opening in which damper is required. Ensure openings are properly sized and located, and all voids between damper sleeve and opening are properly sealed to maintain rating of fire barrier.

.4 Where size of fire barrier opening requires use of a sectionalized fire damper assembly, provide multiple fusible link dampers (sized to CAN/ULC S112) bolted together in a properly sized assembly or bolted to a heavy-gauge black structural steel angle or channel framework.

3.14 INSTALLATION OF COMBINATION FIRE/SMOKE DAMPERS

.1 Provide combination fire/smoke dampers. Install dampers with retaining angles on all 4 sides of each side of damper, and, where required, connect with ductwork, all in accordance with damper manufacturer's instructions and details, and Code requirements.

.2 Coordinate damper installation with electrical work where electrical connections to damper actuators are specified.

3.15 INSTALLATION OF SMOKE DAMPERS

.1 Provide smoke dampers. Install dampers with retaining angles on all 4 sides of sleeve on both sides of damper and connect with ductwork in accordance with damper manufacturer's instructions and details, and Code requirements.

.2 Coordinate damper installation with electrical work where electrical connections to damper actuators are specified.

.3 Where size of fire barrier opening requires use of a sectionalized fire damper assembly, provide multiple smoke dampers (sized to CAN/ULC S112) bolted together in a properly sized assembly or bolted to a heavy-gauge black structural steel angle or channel framework.

3.16 INSTALLATION OF FLEXIBLE CONNECTION MATERIAL

.1 Provide a minimum of 100 mm (4") of flexible connection material where ducts, plenums, and/or easings connect to fans, and wherever else shown or specified.

.2 Rigidly secure a minimum of 75 mm (3") of duct material (minimum #24 gauge) to each edge of flexible fabric and to fan, duct, plenum, etc., in accordance with ANSI/SMACNA HVAC Duct Construction Standards Metal and Flexible. Ensure connections to flexible fabric material are arranged and supported so as to not impose any external forces on the fabric.

3.17 INSTALLATION OF PRESSURE RELIEF DOORS

.1 Provide pressure release access doors to prevent duct system explosion or implosion as a result of a duct obstruction, i.e. closed fire damper, which prevents normal air flow through the system. Size access doors in accordance with requirements of Part 2 of this section.

.2 Where pressure release doors are shown in suction ducts or plenums, mount access door assembly so door swings in and latch mechanism is on the inside of duct or plenum. If latch mechanism is not accessible, provide a standard access door at latch side of the pressure release access door for maintenance purposes.

.3 Adjust each latch mechanism by means of the adjusting pin to suit static pressure of the particular system in accordance with latch mechanism manufacturer's instructions.

3.18 INSTALLATION OF DUCT ACCESS DOORS

.1 Provide access doors in ductwork for access to all components which will or may need maintenance and/or repair, including reheat coils. Install in accordance with requirements of ANSI/SMACNA HVAC Duct Construction Standards Metal and Flexible.

.2 Identify access doors provided for fusible link damper maintenance with "FLD" stencil painted or marker type red lettering and ensure doors are properly located for damper maintenance.

.3 When requested, submit a sample of proposed duct access doors for review.

.4 Where sectionalized fusible link dampers and/or balancing dampers are provided in large ducts, provide a plenum type access door to suit, and adequately reinforce ductwork to suit access door installed.

3.19 INSTALLATION OF INSTRUMENTS TEST PORTS

.1 Provide instrument test ports in all main ducts at connections to fans, plenums, or casings, in all larger branch duct connections to mains, and wherever else required for proper air quantity balancing and testing.

.2 Locate test ports where recommended by personnel performing air quantity testing and balancing work.

3.20 INSTALLATION OF WIRE MESH (BIRDSCREEN)

.1 Provide framed, removable wire mesh panels over openings in ducts and/or walls where shown and/or specified on drawings. Rigidly secure in place but ensure panels are removable.

.2 Provide wire mesh panels for open-end return air ducts in ceiling spaces whether shown on drawings or not.

3.21 INSTALLATION OF FIRE STOP FLAPS AND THERMAL BLANKETS

.1 Provide fire stop flaps in duct connection necks of grilles and diffusers installed in ULC fire rated suspended ceiling systems where shown on drawings.

.2 Provide thermal blanket material to completely cover grille and/or diffuser pans above suspended ULC fire rated ceilings. Cut, install, and secure in place in accordance with manufacturer's instructions and ULC requirements.

3.22 INSTALLATION OF GRILLES AND DIFFUSERS

.1 Provide grilles and diffusers. Wherever possible, grilles and diffusers are to be product of same manufacturer.

.2 Unless otherwise specified connect grilles and diffusers in accordance with requirements of SMACNA HVAC Duct Construction Standards Metal and Flexible.

.3 Exactly locate grilles and diffusers to conform to final architectural reflected ceiling plans and detailed wall elevations, and to conform to final lighting arrangement, ceiling layout, ornamental and other wall treatment.

.4 Equip supply diffusers having a basic 4-way or all round air pattern for operation in 1-, 2-, or 3-way pattern where indicated on drawings.

.5 Provide sheet metal plenums, constructed of same material as connecting duct, for linear grilles and/or diffusers where shown. Construct and install plenums in accordance with requirements of SMACNA HVAC Duct Construction Standards Metal and Flexible. Where individual sections of linear grilles or diffusers are not equipped with a volume control device, equip duct connection collar(s) with volume control device(s).

.6 Where linear type diffusers/grilles are installed in suspended T-bar ceilings, clip diffusers/grilles in place using clip supplied by diffuser/grille manufacturer.

.7 Confirm grille and diffuser finishes prior to ordering.

3.23 DUCT SYSTEM PROTECTION, CLEANING AND START-UP

.1 Temporarily cover all open ends of ducts during construction.

.2 Remove all dirt and foreign matter from entire duct systems and clean duct system terminals and interior of air handling units prior to operating fans.

.3 Prior to starting any supply air handling system provide 50 mm (2") thick glass fibre construction filters at fan equipment in place of permanent filters.

.4 Provide cheesecloth over duct system inlets and outlets and run system for 24 hours, after which remove cheesecloth and construction filters, and install new permanent filters.

.5 Include all labour for a complete site walk-through with testing and balancing personnel following route of all duct systems to be tested, adjusted, and balanced for the purpose of confirming proper position and attitude of dampers, location of pitot tube openings, and any other work affecting testing and balancing procedures. Perform corrective work required as a result of this walk-through.

END OF SECTION

PART 1 - GENERAL

1.1 SUBMITTALS

.1 Submit shop product data sheets for silencers. Include all construction, acoustic and aerodynamic performance data, and details with submission. Acoustical data is to demonstrate that duct systems with silencers will reduce mechanical fan system noise to required levels in occupied spaces.

.2 Submit manufacturer's test data to indicate results of factory tests on the silencers prior to shipment.

.3 Submit a copy of the silencer manufacturer's National Voluntary Laboratory Accreditation Program (NVLAP) accreditation certificate for ASTM E477 test standards.

1.2 CLOSEOUT SUBMITTALS

.1 Submit an installation certification letter from silencer manufacturer as specified in Part 3 of this section.

1.3 QUALITY ASSURANCE

.1 Silencer performance must be substantiated by laboratory testing in a duct-to-reverberant room test facility according to ASTM E477, Standard Test Method for Measuring Acoustical and Airflow Performance of Duct Liner Material and Prefabricated Silencers.

.2 Silencer acoustic media and any lining/wrapping material must have a maximum flame spread rating of 25 and a smoke developed rating of 50 when tested in accordance with CAN/ULC-S102, Surface Burning Characteristics of Building Materials, and Accessories.

PART 2 - PRODUCTS

2.1 MANUFACTURERS

.1 Vibro-Acoustics Ltd.;

.2 Kinetics Noise Control Vibron Products Group;

.3 Price Industries Inc.

2.2 GENERAL RE: SILENCERS

.1 Silencers are to be factory fabricated by same manufacturer and are to be in accordance with drawing schedule, and tested in accordance with ASTM E477 through National Voluntary Laboratory Accreditation Program (NVLAP) with valid accreditation certificate.

.2 Silencer inlet and outlet dimensions are to be equal to duct sizes shown on drawings. Unless otherwise shown or specified, transitions will not be permitted.

.3 Silencers are to be constructed in accordance with SMACNA HVAC Duct Construction Standards Metal and Flexible, to suit duct system pressure and velocity classification. Unless otherwise specified, casing seams and joints are to be lock-formed and sealed or stitch welded and sealed, and silencers are to be constructed so as not to fail when subjected to an internal static pressure of 3.9 kPa (8" wg).

.4 Perforated steel is to be adequately stiffened to ensure flatness and form, and welds are to be shop painted with zinc rich paint.

.5 Silencers are to be shipped with factory installed end caps.

.6 Galvanized steel is to be in accordance with ASTM A653.

2.3 OUTER CASING MATERIALS

.1 Rectangular Straight and Transitional Straight Silencers: minimum #22 gauge lock forming quality galvanized steel.

.2 Elbow and Transitional Elbow Silencers: minimum #18 gauge for elbow lock forming quality galvanized steel.

2.4 INTERIOR BAFFLE-LINER-BULLET MATERIAL

.1 Minimum #22 gauge lock forming quality galvanized steel.

2.5 INTERIOR BAFFLE TRANSITION

.1 Transitioning for interior transition silencers is to occur internal to silencer such that height of air passage is uniformly changing with the length of the air passage.

2.6 ACOUSTIC MEDIA MATERIAL

.1 Except for no media silencers, and unless otherwise specified, inert, inorganic glass fibre of a density to obtain specified acoustic performance, packed under not less than 5% compression to eliminate voids due to vibration and settling.

.2 No media silencers are not to contain absorptive media of any kind, achieve attenuation with controlled impedance membranes and broadly tuned resonators.

2.7 ACOUSTIC MEDIA PROTECTION MATERIAL

.1 Material for lining/wrapping acoustic media to help prevent shedding and erosion, in accordance with drawing schedule, is to be:

.1 Tedlar film material separated from perforated metal liner with a 12 mm (½") thick acoustically transparent spacer;

PART 3 - EXECUTION

3.1 INSTALLATION OF SILENCERS

.1 Provide silencers. Ensure silencers are installed with airflow arrows in the direction of airflow.

.2 Support each silencer independent of connecting ductwork.

.3 Properly layout ductwork for silencer locations to provide a minimum of 5 diameters of straight duct upstream of silencer and 10 diameters of straight duct downstream of silencer.

.4 Unless otherwise specified, do not install silencers in walls or slabs.

.5 Seal all silencer connections to ducts with proper fire/smoke rated duct sealer.

END OF SECTION

PART 1 - GENERAL

1.1 SUBMITTALS

.1 Submit shop drawings/product data sheets for fans and accessories. Include following:

.1 certified fan performance curves at specified operating point with flow, static pressure and HP clearly plotted;

.2 certified sound power data that conforms to specified levels;

.3 product data sheets for all accessories;

.4 product data sheets for fan motors.

1.2 CLOSEOUT SUBMITTALS

.1 Submit with delivery of each unit a copy of the factory inspection report, and include a copy of each report with O&M Manual project closeout data.

.2 Submit a site inspection and start-up report from manufacturer's representative as specified in Part 3 of this section.

.3 Training attendance records.

1.3 QUALITY ASSURANCE

.1 Fan manufacturers, as applicable, are to be current members of the Air Movement and Control Association International Inc. (AMCA), and fans are to be rated (capacity and sound performance) and certified in accordance with requirements of following standards:

.1 ANSI/AMCA Standard 210, Laboratory Method of Testing Fans for Certified Aerodynamic Performance Rating;

.2 AMCA Standard 211, Product Rating Manual for Fan Air Performance;

.3 ANSI/AMCA Standard 300, Reverberant Room Method for Sound Testing of Fans;

.4 AMCA Standard 311, Product Rating Manual for Fan Sound Performance;

.5 AMCA Standard 99-2408, Operating Limits for Centrifugal Fans.

PART 2 - PRODUCTS

2.1 CENTRIFUGAL INLINE FANS

.1 Centrifugal, ULC listed, factory run tested rectangular inline fans in accordance with drawing schedule.

.2 Heavy-gauge galvanized steel housing with removable side panels to permit removal of power assembly without disturbing duct connections, universal mounting brackets and hardware including spring vibration isolators to accommodate horizontal or vertical mounting as required, a flanged inlet panel with inlet venturi, a flanged outlet panel, both with duct connection collars, and galvanized steel wire grid fan inlet/outlet guard(s).

.3 Non-overloading aluminium wheel with backward inclined blades with matching inlet venturi, statically and dynamically balanced as an assembly.

.4 For belt-drive fans only, hot rolled steel shaft, accurately turned, ground, and polished, and sized for a first critical speed of at least 1.25 times maximum rated speed for fan, and heavy-duty, self-aligning pillow block type bearings selected for an AFBMA L-50 minimum average life in excess of 500,000 hours and equipped with lubrication line and fitting, and an adjustable V-belt drive with guard conforming to requirements of Section 20 05 00 – Common Work Results for Mechanical.

.5 TEFC motor conforming to requirements specified in Section 20 05 00 – Common Work Results for Mechanical, mounted out of the airstream, complete with a cover, and factory pre-wired to a NEMA 4 disconnect switch.

.6 For fans as scheduled, factory supplied accessories as follows:

.1 for fans as scheduled, housing insulation (lining), consisting of neoprene spray coated glass fibre semi-rigid insulation meeting NFPA 90A requirements and 25/50 flame spread/smoke developed ratings when tested in accordance with CAN/ULC S102, permanently secured in place with no exposed edges;

.2 for fans as scheduled, a galvanized steel filter box with frame suitable for 25 mm (2") thick disposable panel type filters;

.7 Manufacturers:

.1 Twin City Fan and Blower;

.2 Loren Cook Co.;

.3 Greenheck Fan Corp.;

.4 JencoFan;

.5 Carnes Company Inc.

2.2 CORROSION RESISTANT CENTRIFUGAL FANS

.1 Centrifugal FRP fans in accordance with drawing schedule, with drive arrangement and configuration as indicated on drawings, and capable of operating over complete pressure class limits as specified in AMCA Standard 99-2408.

.2 Aerodynamically designed housing with high efficiency inlet, manufactured from resins, UV inhibited, reinforced with fibreglass, and with bolts holding housing to support plate encapsulated in FRP, and no uncoated metal in contact with corrosive air stream. Each assembly is to be complete with graphite impregnated interior casing, lifting lugs, type 304 stainless steel fasteners, a FRP ridge inside casing to divert condensation from dripping over hub and shaft, a flanged inlet and outlet, and an impeller inspection and service access door.

.3 Backward curved FRP wheel electronically statically and dynamically balanced after assembly, with an integral metal back plate encapsulated in resin and with hub extended to outside housing, a removable FRP cap to cover impeller end of shaft, and a vacuum hub seal to prevent contaminated air from escaping from fan housing.

.4 For belt driven fans, type 316 stainless steel shaft, accurately turned, ground, polished, and ring gauged for accuracy, and sized for a first critical speed of at least 1.25 times maximum rated speed for fan, and complete with guard, and heavy-duty, sealed, grease lubricated, ball or roller, self-aligning pillow block type bearings selected for an AFBMA L-10 minimum average bearing life in excess of 200,000 hours, and equipped with extended copper lubrication lines terminated in lubrication fittings at exterior of fan assembly, and an adjustable V-belt drive selected for 50% service factor based on motor nameplate data, with FRP OHSA guard in accordance with requirements of Section 20 05 00 – Common Work Results for Mechanical.

.5 NEMA Premium TEFC motor conforming to requirements of Section 20 05 00 – Common Work Results for Mechanical.

.6 Rigid, welded structural steel unitary fan and motor support base, factory cleaned and finished with 4 to 6 mm thick baked powder epoxy enamel.

.7 Factory secured seismic restraint connection hardware.

.8 Manufacturers:

.1 M. K. Plastics Corp.;

.2 New York Blower Co.;

.3 Pasticair Inc.

PART 3 - EXECUTION

3.1 INSTALLATION OF CENTRIFUGAL INLINE FANS

.1 Provide inline centrifugal fans.

.2 Secure each fan in place from structure with vibration isolation, independent of connecting ductwork and in accordance with fan manufacturer's instructions.

.3 Brace and secure each unit in accordance with requirements specified in Section 20 05 48.16 – Seismic Controls for Mechanical Systems.

.4 Ensure duct connections are made using flexible connection material.

.5 For equipment/system manufacturer certification requirements, refer to Section 20 05 00 – Common Work Results for Mechanical.

.6 For equipment/system start-up requirements, refer to Section 20 05 00 – Common Work Results for Mechanical.

.7 Include for a 4 hour on-site operation demonstration and training session. Training is to be a full review of all components including but not limited to a full operation and maintenance demonstration, with abnormal events.

3.2 INSTALLATION OF FRP CENTRIFUGAL FANS

.1 Provide FRP centrifugal fans.

.2 Secure suspended units in place from structure, level and plumb, by means of corrosion resistant vibration isolation spring hangers, properly sized type 316 stainless steel hanger rods and a structural type 316 stainless steel angle, or channel support structure.

.3 For equipment/system manufacturer certification requirements, refer to Section 20 05 00 – Common Work Results for Mechanical.

.4 For equipment/system start-up requirements, refer to Section 20 05 00 – Common Work Results for Mechanical.

3.3 CLOSEOUT ACTIVITIES

.1 Include for a 4 hour on-site operation demonstration and training session. Training is to be a full review of all components including but not limited to a full operation and maintenance demonstration.

END OF SECTION

PART 1 - GENERAL

1.1 SUBMITTALS

.1 Submit shop drawings/product data sheets for all products specified in this section.

1.2 MAINTENANCE MATERIAL SUBMITTALS

.1 Prior to Substantial Performance of the Work, submit a set of spare filters in original identified packaging for each air handling unit requiring filters. Store filters on site where directed by Consultant or Owner.

PART 2 - PRODUCTS

2.1 GENERAL

.1 Unless otherwise specified or noted, filters are to be synthetic and/or glass fibre disposable media type in accordance with drawing schedule(s).

.2 Minimum Efficiency Reporting Values (MERV) ratings in accordance with ASHRAE Standard 52.2, Method of Testing General Ventilation Air-Cleaning Devices for Removal Efficiency by Particle Sizes.

.3 Unless otherwise specified or noted, filters are to be UL/ULC Class 1 in accordance with UL Standard 900, Air Filter Units, ULC S111, Standard Method of Fire Tests for Air Filter Units, and CAN/CGSB 115.10, Disposable Air Filters for Removal of Particulate Matter from Ventilation Systems.

.4 Manufacturers:

.1 AAF International;

.2 Camfil Farr Inc.;

.3 Modern Air Filter Corp.

2.2 CONSTRUCTION FILTERS

.1 Roll type, disposable, MERV 7 to 9 woven glass fibre media, UL Class 2.

2.3 HEPA FILTERS

.1 HEPA high capacity filters in accordance with drawing schedule and UL Standard 586, High-Efficiency, Particulate, Air Filter Units, 99.995% efficient on 0.12 µm particles, consisting of a continuous pleating of water-proof micro glass fibre media with pleats uniformly separated by aluminum separators, urethane sealant to encapsulate the filter pack in minimum #16 gauge galvanized steel frame with one-piece urethane gasket or neoprene dove-tailed gasket for positive leak-free filter-to-holding mechanism seal.

2.4 FILTER FRAMING AND RACKS

.1 No. 16 gauge galvanized steel filter framing/racks, sized and arranged to suit filters and filter bank, easily accessible for filter service and replacement, and complete with slide-in tracks or lay-in flanges as required for filter placement, and all required gasketing and facilities to prevent air by-pass.

PART 3 - EXECUTION

3.1 INSTALLATION OF CONSTRUCTION FILTERS

.1 Provide roll type medium efficiency disposable media filter(s) across entire filter bank of each supply air handling unit, either at factory where fan is produced or at site as soon as fan is installed. Secure media in place so it will not be dislodged by fan operation. Replace roll media periodically if it becomes loaded and clogged.

.2 For exhaust systems, secure filter media across exhaust air openings and ductwork to prevent construction dirt and dust from fouling the fan

.3 Leave media in place until fan start-up, at which time remove and dispose of construction media.

3.2 INSTALLATION OF FILTERS

.1 Provide required filter media when fan equipment is ready for start-up and performance testing. Provide any required filter framing/racks.

.2 Prior to Substantial Performance of the Work, supply a complete spare set of filter media in original packaging and clearly identified as to the applicable system for each air handling system with filters. Store filters at site where directed by Owner.

END OF SECTION

PART 1 - GENERAL

1.1 SUBMITTALS

.1 Submit shop drawings/product data sheets for all custom made air handling units. Include following:

.1 computer generated and certified fan performance curves;

.2 computer generated psychometric chart for each cooling coil;

.3 certified sound power data for discharge, radiated, and return positions by octave band;

.4 hardware for section-to-section site connections as applicable;

.5 dimensioned layouts;

.6 product data sheets for fan motors;

.7 unit assembled and commissioned weight.

.2 Submit manufacturer's colour chart to indicate standard colour range of paint finishes.

1.2 CLOSEOUT SUBMITTALS

.1 Submit with delivery of each unit a copy of factory test and inspection report as specified in Part 2 of this section, and include a copy of each report with O&M Manual project closeout data.

.2 Submit a site inspection and start-up report from manufacturer's representative as specified in Part 3 of this section.

.3 Training attendance records.

1.3 MAINTENANCE MATERIAL SUBMITTALS

.1 Submit spare air filters as specified in Part 2 of this section.

.2 Supply 4 L (3.5 qt) of touch-up paint with each custom made air handling unit.

1.4 COORDINATION

.1 Unit shall be full knockdown construction to assist with placement in final location

.2 The available space from the loading dock on the service level to the final location on the second floor is the following:

.1 Maximum available height: 80 inches (restricted by loading dock door)

.2 Maximum available width: 48 inches (restricted by elevator opening width)

.3 Maximum available length: 90 inches (restricted by elevator cab depth)

.3 Contractor and vendor are responsible for accounting for available turn radius's between loading dock and final installation location. Break up skids as required to meet this requirement.

.4 Contractor is responsible for coordinating delivery when unit is required by the Schedule as there is no storage available at the hospital.

1.5 QUALITY ASSURANCE

.1 Custom made air handling equipment is to be rated (capacity, performance, efficiency and sound) and certified in accordance with requirements of following American National Standards Institute/Air-Conditioning, Heating and Refrigeration Institute Standards, and Air Movement and Control Association International Inc. Standards:

.1 AHRI 410, Forced-Circulation Air-Cooling and Air-Heating Coils;

.2 AMCA Standard 211, Product Rating Manual for Fan Air Performance;

.3 AMCA Standard 311, Certified Ratings Program – Product Rating Manual for Fan Sound Performance;

.4 AMCA Standard 99-2408, Operating Limits for Centrifugal Fans.

.2 Custom made air handling equipment is also to be in accordance with requirement of following Codes, Standards, and Regulations:

.1 CAN/CSA C22.2 No. 236/UL 1995, Heating and Cooling Units;

.2 ANSI/ASHRAE/IES 90.1, Energy Standard for Buildings Except Low Rise Residential Buildings;

.3 CSA or ETL certification and labelling for all electrical components;

.4 governing local Codes and Regulations.

PART 2 - PRODUCTS

2.1 MANUFACTURERS

.1 Custom Air Handling Units:

.1 Haakon Industries (Canada) Ltd.,

.2 Ingenia Technologies,

.3 MAFNA Air Technologies Inc.,

.4 Nortek Air Solutions,

.5 York (Johnson Controls).

.2 Components:

.1 Fans:

.1 Twin City Fan and Blower,

.2 Haakon Industries

.3 Loren Cook Co.,

.4 CML Northern Blower Inc.;

.5 PennBarry

.2 Heat transfer coils:

.1 Aerofin Canada Services Inc.,

.2 Heatcraft Inc.,

.3 Daikin.

.3 Filters:

.1 Camfil Farr Canada Inc.

.2 AAF International

2.2 CASING LEAKAGE TESTING

.1 Casing shall be designed and tested on site at 2.0 kPa positive and negative with leakage not to exceed 1% of unit airflow. and witnessed by the Consultant/Owner.

.2 Balancer shall perform all required leakage testing and provide report for record purposes as a submittal and to be included in operating and maintenance manuals.

.3 Leakage testing shall be performed after all sealants have reached required curing time as indicated by the manufacturer.

.4 If the leakage testing fails to meet requirement, Contractor is responsible for correcting any excess leakage areas and retesting the unit until the requirement above is met

2.3 ACOUSTICAL PERFORMANCE

.1 The casing shall have been tested for acoustical performance by an independent laboratory that is accredited. Manufacturers shall submit sound data in compliance with the following:

.1 Test methods and facilities used to establish sound transmission loss values shall conform explicitly with the ASTM designation E90-85 and E413-73 or in accordance with AHRI260.

.2 Refer to Mechanical Schedules for required sound power levels.

2.4 CASING AND SECTION CONSTRUCTION

.1 A 0.12” thick aluminum checker plate floor shall be installed on the base. Floor seams shall be continuously welded providing a completely flat unit floor. Standing seems will not be accepted in any section. A 1-1/2" perimeter collar shall be provided to ensure the unit is internally watertight. The collar shall be alternately screwed down and tack welded to the unit base on one (1) foot centers. Caulk joint to be air and water tight.;

.2 The base shall be insulated with 4" thick, 1-1/2 lb. density fibreglass insulation and sheeted with a 22 gauge galvanized steel liner. The base liner shall be thermally broken, tack welded and sealed for rigidity and vapour barrier integrity.

.3 All drain connections from drain pans for cooling coils and humidifiers shall be run to side of unit for field connection by contractor.

.4 Walls and roofs shall be constructed of 16 gauge galvanized steel 2" thick acoustic thermal panels. The inner liner shall be 22 gauge solid galvanized steel. Any sections with cooling coils and humidifiers, including upstream side of fan and roofs, inner liner shall be 22 gauge 304 stainless steel. Insulation shall be 2" thick 4.0 lb. density mineral fiber. All permanently joined flanged panel surfaces shall be sealed with an individual strip of 1/8" X 3/8" tape sealer. Wall seams shall be turned inward to provide a clean flush exterior finish. All panel seams shall be sealed during assembly to produce an airtight unit.

.5 Unit walls, doors, roof and floor/base shall be thermally broken with no through metal and complete with outer surface temperature calculation assuming outer conditions 33°C dry bulb 24°C wet bulb and inner conditions of 11°C dry bulb. Casing shall be designed so that any outer surfaces, including door windows, and base do not form condensation at the given conditions. Thermal break details shall be provided in shop drawings for review by Consultant.

.6 Heavy-gauge hot dipped galvanized steel section-to-section connection brackets with heavy-duty non-corrosive hardware, designed for tight section-to-section connections.

.7 Welded structural steel bases, insulated, equipped with galvanized sheet metal closure for the insulation, reinforcing welded steel cross-members as required, and lifting lugs.

.8 Piping penetrations through casings equipped with temporary caps, and openings neatly and accurately cut or drilled, sealed with synthetic rubber type grommets by Kennard Ind. Inc., St. Louis, Mo., U.S.A, or approved equivalent, or tight fitting galvanized steel or aluminium escutcheon plates on both sides of casing.

.9 Unless otherwise indicated on drawings, 50 mm (42") thick semi-rigid glass fibre or mineral fibre insulation meeting 25/50 flame spread/smoke developed ratings when tested in accordance with CAN/ULC S102, and secured in place so it does not sag.

.10 Unit shall be finished painted with two components, etch bond primer and finish painted with alkyd enamel, manufacturer standard colour. All uncoated steel shall be painted with grey

enamel. All metal surfaces shall be prepainted with vinyl wash primer to ensure paint bonds to metal.

.11 Access door construction and thickness shall match the rest of the unit casing. Corners shall be continuously welded for rigidity. 4.0 lb. density insulation shall be sandwiched between the outer and inner skins. A 10" round double pane thermally broken tempered glass window shall be provided in each door. Access doors shall contain thermally broken doors and frames equal to Nailor model “0850-2” and “0855-2”.

.12 Chrome plated “Ventlok” Model #310 high pressure latches operable from either side of the door or equivalent roller cam style latches with fiber reinforced plastic (nylon) handles. Provide a minimum of two latches per door or additional latches to meet cabinet pressure requirements. Hinges shall be continuous piano type stainless steel or fibre reinforced plastic (nylon) hinges. Provide a minimum of two hinges per door or additional hinges as required to meet cabinet pressure requirements. Door openings shall be fully gasketed with continuous double 1/2" closed cell hollow round black gasket with a metal encapsulated reinforced backing that mechanically fastens to the door opening perimeter. Gaskets shall be located on both door and frame to provide a double seal. Door frames shall be framed from 16 gauge galvanized steel or extruded aluminum with the outside of the door flush to the unit. Minimum door width shall be as shown on the plans but in no case shall an access door be less than 18". Door height shall be the maximum permitted by the height of the unit up to 72".

.13 Doors shall open against positive pressure.

2.5 NORMAL ENVIRONMENT PLENUM FANS

.1 Centrifugal plenum fans in accordance with drawing schedule, designed without a scroll type housing, and capable of operating over complete pressure class limits as specified in AMCA Standard 99-2408.

.2 Heavy-gauge reinforced steel inlet plate with perimeter square formed lip, spun steel inlet cone bolted to inlet plate for smooth airflow into the venturi shaped inlet cone of fan wheel, and a welded structural steel framework forming a mounting base and bearing support platform welded to inlet plate.

.3 Non-overloading wheel with backward inclined, die-formed, airfoil design steel blades continuously welded to a spun inlet cone, backplate, and cast iron hub, statically and dynamically balanced as an assembly, and designed for critical speeds of at least 1.25 times maximum class speed.

.4 AISI C-1040 or C-1050 hot rolled steel fan shaft, accurately turned, ground, polished and ring gauged for accuracy, and sized for a first critical speed of at least 1.25 times maximum rated speed for fan, and heavy-duty, grease lubricated, ball or roller self-aligning pillow block type bearings selected for an AFBMA L-10 minimum average life in excess of 250,000 hours and equipped with extended copper tube lubrication lines terminated in lubrication fittings immediately inside fan section access door.

.5 NEMA Premium TEFC motor, inverter duty, class F insulation, with adjustable V-belt drive selected for 40% service factor based on motor nameplate data, an OHSA guard, re-greasable bearings with L10 of 150,000 hours for direct drive applications, Belt guard shall be sized to allow either sheave to be increased by two sizes. Acceptable motor manufacturers equal to Reliance-Baldor, US Motors or WEG.

.6 Rigid, welded structural steel, vibration isolated base with steel cross members, factory cleaned, deburred, and finished with epoxy enamel, and complete with slide type motor base, and stable, colour coded spring mounts with neoprene sound pads selected to suit static deflection and to operate at not greater than 2/3 solid load, and equipped with shipping restraints.

.7 Rigid, open mesh galvanized steel safety screen enclosure with fan wheel access facilities, and a removable galvanized steel mesh inlet screen.

.8 Waterproof flexible connection, indoor-outdoor Duro-Dyne Canada Inc. "DURALON" or DynAir Inc. "HYPOLON" woven fibreglass fabric coated on both sides with a special off-white synthetic rubber

compound, factory installed between fan discharge and casing opening, with spring thrust restraints secured to welded brackets on fan housing and by steel rods through fan casing with a steel back-up plate.

2.6 HYDRONIC HEAT TRANSFER COILS

.1 Coil data, performance and specific features not specified below are to be in accordance with drawing detail. Each coil is to be complete with:

.1 slide in-slide out galvanized steel (304 stainless steel for cooling coils) mounting framework in accordance with drawing detail;

.2 16 mm (5/8") O.D. seamless copper tubes mechanically expanded into and bonded to aluminium fins; welded Schedule 40 ASTM A53 seamless steel pipe headers with same end supply and return connections, and 9.5 mm (3/8") tappings for an air vent and a drain valve;

.3 flanged #16 galvanized steel (304 stainless steel for cooling coils) casing designed to drain off standing water, and intermediate tube support sheets;

.2 factory installed coil piping connections terminated through coil section casing minimum 125mm beyond outer casing.

2.7 COOLING COIL DRAIN PANS

.1 304 stainless steel drain pans, each constructed with a cross-break and a double slope pitch to extended 32 mm (1-¼") diameter drain connection extended to side of unit located with a centreline a minimum of 75 mm (3") above unit base, and complete with 50 mm (2") of flexible elastomeric insulation meeting 25/50 flame spread/smoke developed ratings when tested in accordance with CAN/ULC S102.

2.8 HUMIDIFIER SECTION FLOORS

.1 Floors in humidifier sections shall be constructed of 304 stainless steel and sloped towards a 32mm drain connection extended to side of unit, or:

.2 A double sloped SS drain pan in accordance with CSA Z317.2;

.3 Drain pan length shall be minimum double the absorption distance provided by the humidifier manufacturer. Insulation for drain pan shall meet requirements in article 2.9 of this specification.

2.9 AIR FLOW MEASURING PROBES AND DISPLAY

.1 Ebtron Gold Series (GTx108e-F) Fan inlet measurement system. Two thermal dispersion probes per fan inlet, 3% to 10% installed air flow accuracy, ability for field calibration to a reliable reference, and temperature measurement.

.2 24V 2 line 16 character backlit LCD display and 4 button interface housed in stainless steel housing. Three programmable analogue outputs and BACNET IP connectivity. Display mounted on exterior of unit, wired to sensor probes on fans.

2.10 FILTER FRAMING AND RACKS

.1 Rigid, reinforced galvanized steel frame and rack assembly constructed to suit number, type, and size of individual filters comprising filter bank, and either side loading or face loading as indicated.

.2 For prefilters, frame shall be constructed of 304 stainless steel.

.3 Face load racks complete with closed cell neoprene sponge type gasketing on frame of each filter cell, and fasteners similar to Camfil Farr C-78 or C-78-2 to hold filters in place. Racks complete with galvanized steel (304 stainless steel to match frame) blank-off sheets to prevent air bypass, and galvanized steel wire grid members to prevent loaded filters from being sucked out of filter rack.

2.11 FILTERS

.1 Factory supplied filters with each unit as follows:

.1 construction filter: Camfil Farr Canada Inc.CS-5 25 mm (1") thick white, synthetic roll media factory secured in place in filter section prior to shipping;

.2 pre-filters: Camfil Farr Canada Inc. R30/30 WR disposable, replaceable, multi-layer, non-cellulose media, ULC listed and labelled Class 1, each enclosed in a waterproof frame, with a MERV rating of 8A when tested to ASHRAE 52.2, and supplied to site in filter manufacturer's sealed cartons in sufficient quantities for initial loading of pre-filters at fan start-up and 2 sets of spare filters;

.3 Final filters: Camfil Farr Canada Inc. "DURAFIL 4V" disposable, replaceable, extended surface media filters, ULC listed and labelled Class 1, consisting of microfine glass fibres formed into uniformly spaced pleats, fully bonded to frames and assembled in a V-bank configuration, with a MERV rating of 14 when tested in accordance with ASHRAE Standard 52.2, and supplied to site in filter manufacturer's sealed cartons in sufficient quantities for initial loading at fan start-up, and 2 sets of spare filters.

2.12 FILTER GAUGES

.1 Unless otherwise specified, Dwyer Instruments Inc. Series 605 "Magnehelic", 24 volt DC differential pressure gauges, one for each pre-filter bank, one for each final filter bank, each with ± 3% accuracy with a range to suit application, an indicating transmitter with 4-20 mA output, and a mounting bracket.

2.13 MOTORIZED DAMPERS

.1 Equal to T. A. Morrison & Co. Inc. "TAMCO" 100 mm (4") deep flanged aluminium dampers, parallel blade type for mixing applications, opposed blade type for open-shut service, each complete with an extruded 6063-T5 aluminum frame and blades, each blade with an integral slot to receive a gasket, and slip-proof aluminium and corrosion resistant zinc-plated steel linkage concealed in the frame and equipped with self-sealing and self-lubricating bearings consisting of a Celcon inner bearing fixed on hexagonal blade pin and rotating in a polycarbonate outer bearing inserted in frame.

.2 Standard dampers, Series 1500, with aluminium end caps press-fitted to blade ends, and extruded silicone frame and blade gaskets secured in an integral slot within aluminium extrusions.

.3 Insulated dampers, for all outdoor air intake and exhaust air applications, Series 9000, with thermally broken blades internally insulated with expanded polyurethane foam, and extruded TPE (Santoprene) side seals and extruded EDPM blade gaskets secured in an integral slot within aluminium extrusions.

.4 Belimo, CSA certified, spring return, direct coupled electric motor damper actuator, 120 volt or 24 volt as required, electronic overload protected, complete with position indicator, a housing to suit mounting location, and additional features as required to suit application and control sequence. For Class I and Class II explosion-proof environments, Model ZS-260 explosion-proof motor enclosure.

2.14 TEST PROBES

.1 Provide 0.5" diameter test ports for unit air stream testing in each plenum section between each component within the AHU. Test ports shall have a tube that extends between the inside and outside of the unit and a screwed cap on the exterior to allow access. The test ports shall have been flanged on the exterior to allow air seal and shall be flanged on the interior to cover the penetration of the casing.

2.15 STEAM INJECTION HUMIDIFIERS

.1 Provide and factory install low pressure steam injection humidifier in accordance with drawing schedule, each capable of discharging clean dry steam without condensate drip or objectionable noise, and complete with:

.1 stainless steel manifold with air gap insulation, and insulated dispersing tubes;

.2 Provide minimum absorption distance downstream of humidifier as scheduled.

.3 Refer to specification section 23 84 00 for further requirements.

2.16 NORMAL ENVIRONMENT ELECTRICAL ITEMS

.1 Indoor fluorescent fixtures, Cooper Crouse-Hinds #VT2-232-LEX-120V-120-ER81-WL-U surface mounting, vapour-tight, CSA certified 1.2 m (4') long fixture with 2, 32 watt T-8 lamps, energy saving electronic ballast, reinforced fibreglass housing, gasketed high impact acrylic diffuser, mounting brackets, and water-tight conduit hub.

.2 Cooper Crouse-Hinds #VFHF222GP surface mounting aluminium construction vapour-proof marine lights CSA certified, suitable for low ambient temperatures of -25°C (-13°F), and complete with 2, 32 watt T-8 lamps, solid state electronic ballast, heat resistant glass globe with guard, 18 watt compact fluorescent lamp, and for outdoor fixtures only, a Heath Zenith motion sensor attached to fixture.

.3 Hubbell Canada Inc. # 1297 single pole, CSA certified, 15 ampere, 120 volt "PresSwitch" with red nylon actuator and pilot light and #1795 "PresSwitch" clear bubble silicone rubber coverplate.

.4 Cooper Crouse-Hinds NRS Series, non-metallic, heavy-duty, front operated, quick make and break door interlock safety switches in accordance with CSA Standard C22.2 No. 4, and complete with a NEMA 2 enclosure where indoors and a NEMA 4X enclosure where outdoors.

.5 Variable frequency drives suitable in all respects for application, and in accordance with requirements of Section 20 05 13.13 – Variable Frequency Drives for Mechanical Equipment.

2.17 FACTORY WIRING AND ELECTRICAL WORK

.1 Wiring and electrical work factory installed by unit manufacturer is to be splash-proof, in galvanized EMT with liquid tight flexible conduit to motors and include:

.1 installation of lighting fixtures, located where shown, each secured to a cast aluminium surface mounted box;

.2 switch, located approximately 1.2 m (4') above bottom of unit casing where shown, connected with load side power wiring to control unit lighting fixtures and receptacles;

.3 disconnect switch c/w fast acting auxiliary contactor to stop VFD for fan motors, secured to exterior of fan module casing and pre-wired to fan motor;

.4 At all split sections, provide a one foot long piece of flexible conduit, with the extra wire spooled, for reconnection on site by the installing contractor.

.2 Unless otherwise specified, boxes are to be cast aluminium type with covers where required..

2.18 FIELD ASSEMBLED AIR HANDLING UNIT

.1 The air-handling unit shall be field assembled on site by the contractor. All parts shall be pre-formed by the manufacturer and partially assembled where access is possible. The parts shall be labeled according to an assembly drawing. All assembly material required such as insulation, sealants, fasteners and hardware shall be supplied by the manufacturer as part of the kit.

.2 Where access permits, sections of the exterior casing shall be pre-assembled in the factory. Otherwise, casing panels shall be shipped individually.

.3 Unit base shall be made in factory-assembled sections with joining flanges for field assembly. The base and exterior sections shall be pre-painted and pre-insulated in the factory.

.4 Doors and frames shall be pre-assembled (complete with windows where specified).

.5 Where access permits, the coil and filter racks shall be pre-assembled and pre-painted in the factory.

.6 Fan shall be assembled in the factory complete with motor, protective screening, belt guards and isolation base. The fan and guarding shall be pre-painted in the factory. The fan assembly shall undergo a test run in the factory. Where access permits, the fan assembly shall be shipped in one piece. If access does not permit shipping in one piece, the fan shall be disassembled and shipped in pieces.

.7 Coils shall be installed on site by the contractor.

.8 Air-handling unit shall be complete with Touch up painted as needed by the contractor

.9 Electrical panels shall be pre-assembled and pre-tested in the factory. The manufacturer shall provide all necessary conduits and fittings to extend the motor wiring to the electrical panel.

.10 Air-handling unit manufacturer shall provide marine light fixtures, duplex receptacles, the light switch and the necessary conduit and fittings for field installation of the fixtures.

.11 The contractor shall be responsible for installation of electrical equipment.

.12 Unit manufacturer shall provide daily supervision and training to Contractors site forces for the duration of the assembly of the unit and provide a report to the Consultant indicating work by contractor meets all quality requirements of the unit manufacturer. Unit manufacturer representative shall be present during unit leakage testing and advise on any repairs required if test fails. Unit manufacturer representative shall be present all subsequent unit leakage testing until unit passes.

PART 3 - EXECUTION

3.1 INSTALLATION

.1 Provide custom made air handling units.

.2 Provide required rigging and hoisting/moving equipment required to move units to required locations. Perform rigging/hoisting/moving in accordance with unit manufacturer's directions and details.

.3 Remove fan base hold-down clamps and other shipping restraints and protective packaging.

.4 Carefully coordinate installation of each unit with other trades making connections to unit, in particular, control connections.

3.2 SYSTEM STARTUP

.1 For equipment/system manufacturer certification requirements, refer to Section 20 05 00 – Common Work Results for Mechanical. When installation is complete but prior to duct connections, arrange for the unit manufacturer's representative to conduct a site leakage test on each unit. Site leakage tests are to duplicate factory leakage tests and if results of site tests indicate leakage in excess of factory test results, re-seal the unit(s) and repeat the tests until satisfactory results are obtained. Submit leakage test documentation to the Consultant.

.2 For equipment/system start-up requirements, refer to Section 20 05 00 – Common Work Results for Mechanical.

3.3 CLOSEOUT ACTIVITIES

.1 Include for a full 8 hour day on-site operation demonstration and training session. Training is to be a full review of all components including, but not limited to, a full operation and maintenance demonstration, with abnormal events.

END OF SECTION

PART 1 - GENERAL

1.1 REFERENCES

.1 AHRI Standard 410-2023, Performance Rating of Forced-circulation Air-cooling and Air-heating Coils.

.2 CSA C22.2 No. 155-M86 (R2022), Electric duct heaters.

.3 CSA C22.2 No. 236-15, Heating and cooling equipment.

1.2 SUBMITTALS

.1 Submit shop drawings/product data sheets for heating coils, including accessories.

PART 2 - PRODUCTS

2.1 DUCT MOUNTED HYDRONIC HEATING COILS

.1 Hydronic coils in accordance with drawing schedule, 1 or 2 row as indicated, each certified to AHRI Standard 410, Forced-Circulation Air-Cooling and Air-Heating Coils, each factory leakage tested at 2070 kPa (300 psi) under water, drainable, self-venting, and complete with:

.1 horizontal, continuous, 15.9 mm (5/8") diameter, 0.050 mm (0.020") wall thickness seamless copper tubes permanently bonded to plate or spirally wound aluminium fins and equipped with threaded female same end connections;

.2 flanged galvanized steel casing arranged to prevent air bypass around coil and factory punched for duct connections.

.2 Where required, coils are to be manufactured as "Registered Fittings" with a Canadian Registration Number (CRN).

.3 Manufacturers:

.1 Aerofin Canada Services Inc.;

.2 Carrier Corp.;

.3 McQuay International.

PART 3 - EXECUTION

3.1 INSTALLATION OF DUCT MOUNTED HYDRONIC HEATING COILS

.1 Provide duct mounting heating coils in supply ductwork.

.2 Secure each coil in place from structure by means of hanger rods, independent of connecting ductwork but ready for duct connection and located for easy removal and access to power and control panel.

.3 Connect with piping in accordance with drawing detail.

END OF SECTION

PART 1 - GENERAL

1.1 SUBMITTALS

.1 Submit shop drawings/product data sheets for products specified in Part 2, including accessories.

1.2 CLOSEOUT SUBMITTALS

.1 Submit with delivery of each unit a copy of the factory inspection report, and include a copy of each report with O&M Manual project close-out data.

.2 Submit a site inspection and start-up report from manufacturer's representative as specified in Part 3 of this section.

.3 Submit a signed copy of manufacturer's extended 2 year warranty.

.4 Training attendance records.

1.3 MAINTENANCE MATERIAL SUBMITTALS

.1 Submit 3 identified keys for cabinet doors for each humidifier prior to Substantial Performance of the Work.

.2 At Substantial Performance of the Work, hand to Owner a complete set of spare filters in "as shipped" packaging.

.3 Submit a spare steam/water cylinder for each humidifier prior to Substantial Performance of the Work.

1.4 QUALITY ASSURANCE

.1 Refrigerant equipment is to be in accordance with CSA B52, Mechanical Refrigeration Code, and any applicable local Codes and Regulations.

.2 Direct expansion refrigeration equipment must be installed by or under direct on site supervision of a licensed journeyman refrigeration mechanic.

PART 2 - PRODUCTS

2.1 ELECTRIC/ELECTRONIC STEAM HUMIDIFIER

.1 CSA certified, package type, 3-phase, 60 Hz, fully automatic electric/electronic steam humidifier in accordance with drawing schedule, capable of discharging pure steam with no mineral dust carryover, and complete with:

.1 1.3 mm (0.05") thick enamelled steel barriered wall mounting cabinet with hinged and lockable door with interlock switch for the 3-phase power electrical section, an additional door to isolate line voltage components, and a separate plumbing compartment;

.2 disposable plastic water/steam cylinders with mesh electrodes;

.3 solenoid drain and fill valves;

.4 control panel with self-diagnostic microprocessor-based control system with LCD display and keypad, steam capacity adjustment, manual drain activation pushbutton, rest pushbutton, digital operation and fault indication and display, and LED indication for current draw, humidistat demand, steam output, capacity adjustment, draining, normal operation and cylinder full, self-check on start-up, and automatic drain of cylinder at end of season;

.5 duct or plenum mounting steam distributor assembly with a length to suit mounting location, complete with condensate separator and return leg;

.6 required lengths of steam supply and condensate return hose;

.7 wall mounting steam distributing blower pack;

.8 duct mounting differential pressure switch for air flow proving interlock;

.9 duct mounting adjustable high limit humidistat.

.2 Manufacturers:

.1 Dristeem.;

.2 Nortec Division (Climate Canada) Ltd.;

.3 Vapac Humidification;

.4 Armstrong International Ltd.;

.5 Hygromatic (Spirax Sarco);

.6 Carnes Co.;

.7 Northern Industrial Humidifiers "Neptronic".

PART 3 - EXECUTION

3.1 INSTALLATION OF ELECTRIC/ELECTRONIC STEAM HUMIDIFIERS

.1 Provide electric/electronic steam humidifiers.

.2 Secure each steam generator assembly in place, level, and plumb, in accordance with manufacturer’s instructions.

.3 Install steam distributor manifold assemblies and secure in place. Coordinate installation with sheet metal trade.

.4 Connect steam generators and distribution manifolds with steam and condensate hose kits supplied with humidifiers. Install in accordance with manufacturer’s instructions.

.5 Install humidistats and pressure differential air flow proving switches and connect with 24 volt control wiring in conduit to steam generator control panel.

.6 Supply a spare water/steam cylinder for each unit and 3 identified keys for each steam generator cabinet and hand to Owner at site prior to Substantial Performance of the Work.

.7 For equipment/system manufacturer certification requirements, refer to Section 20 05 00 – Common Work Results for Mechanical.

.8 For equipment/system start-up requirements, refer to Section 20 05 00 – Common Work Results for Mechanical.

.9 Include for a 1/2 day on-site operation demonstration and training session. Training is to be a full review of all components including but not limited to a full operation and maintenance demonstration, with abnormal events.

.10 When installation is complete, arrange for the humidifier manufacturer to visit site to supervise start-up, testing and adjusting of each humidifier, including all controls and safeties, and when this work is complete, obtain from manufacturer and submit a letter stating humidifiers have been properly installed, started, adjusted, and are in proper operating condition.

END OF SECTION

PART 1 - GENERAL

1.1 SUBMITTALS

.1 Submit shop drawings/product data sheets for following:

.1 all control system components;

.2 identified schematic control diagrams with component identification, catalogue numbers, and sequence of operation for all systems;

.3 certified wiring diagrams for all systems.

.2 Submit following samples for review:

.1 control damper section with linkage, operator, and certified flow and leakage data;

.2 each type of thermostat to be used, each identified as to intended use.

1.2 CLOSEOUT SUBMITTALS

.1 Submit a site inspection and start-up report from manufacturer’s representative as specified in Part 3 of this Section.

.2 Submit written confirmation from control component manufacturer that site installation personnel are qualified and experienced in installation of components, and have parts and service availability on a 24/7 basis.

1.3 QUALITY ASSURANCE

.1 Control systems are to be installed by control component manufacturer or by licensed personnel authorized by control component manufacturer. Submit written confirmation from control component manufacturer.

.2 Control wiring work is to be performed by licensed journeyman electricians, or under direct daily supervision of journeyman electricians.

PART 2 - PRODUCTS

2.1 EXISTING BUILDING AUTOMATION SYSTEM

.1 Building Automation System (BAS) refers to the existing Johnson Controls building automation system in place at the facility. It is the intent of this specification that the BAS and controls specified within this section constitute of expansion of this existing BAS. All controls components supplied shall be fully compatible with the existing BAS

2.2 AUTOMATIC CONTROL VALVES AND OPERATORS

.1 Each control valve must be suitable in all respects for the application, including system pressure, and must have design output and flow rates with maximum pressure drops as noted in the drawing schedules.

.2 Body and trim materials selected in accordance with specification for globe valves, ball valves, or high performance butterfly valves, and in accordance with manufacturer's recommendations for design conditions and service.

.3 Size control valves for pressure drops and heating and cooling loads as scheduled with same pressure rating as globe valves under same service and pressure conditions.

.4 Size valves for two port and three port, two position service;

.1 line size,

.2 ball valves, sizes NPS 1 ½ and smaller,

.3 butterfly valves, sizes NPS 2 and larger.

.5 For two port and three port modulating service;

.1 use globe valves for CV rating 160 and smaller,

.2 use butterfly valves for CV rating above 160.

.6 Select butterfly valves based on CV rating at 70° rotation

.7 Hydronic system valves;

.1 two position service;

.1 straight through two port type, single seated, with replaceable disc or ball,

.2 quick opening linear or equal percentage flow characteristics.

.2 modulating service;

.1 straight through two port type, single seated,

.2 equal percentage flow characteristics.

.3 modulating diverting service; three port mixing valves,

.1 linear for each port to give constant total flow or,

.2 equal percentage flow characteristics with 25% valve authority (valve pressure drop equal to 33% pressure drop through load at full flow).

.4 actuator and trim selected for close-off pressure ratings as follows;

.1 two-way modulating or two position service; 150% of pump shut off head.

.2 three-way modulating service; 300% of pressure differential between ports A and B at design flow or 100% of pump shut off head.

.3 shut off head to be based on maximum rpm when pump is fitted with VFD

.5 sized as follows;

.1 for two-position service; line size.

.2 for two-way modulating service unless otherwise shown; pressure drop at design flow equal to greatest of;

.1 100% of pressure drop through coil,

.2 50% of pressure difference between supply and return mains, or

.3 35 kPa (5 psi).

.3 for three-way modulating service; pressure drop equal to smaller of;

.1 twice pressure drop through coil or heat exchanger, or

.2 35 kPa (5 psi).

.4 for valves for radiation, terminal units and reheat coils;

.1 pressure drop of 7 kPa (1 psig)

.6 failed position on isolation from control signal as follows;

.1 Heating water and glycol zone valves; fail open.

.2 Heating coil valves in AHU; fail open.

.3 Chilled water control valves; fail closed.

.4 Chilled water differential pressure by-pass control valves; fail open.

.5 Hot water and glycol differential pressure by-pass control valves; fail closed.

.8 Steam valves;

.1 globe type, with equal percentage flow characteristics.

.2 actuator and trim selected for close-off pressure rating equal to 150% of operating (inlet) pressure.

.3 sized as follows;

.1 two-position service;

.1 pressure drop at design flow equal to 10%-20% of inlet steam gauge pressure.

.2 modulating service at inlet steam gauge pressure of 100 kPa (15 psig) or less;

.1 pressure drop at design flow equal to 80% of inlet steam gauge pressure.

.3 modulating service at inlet steam gauge pressure of 101-350 kPa (16-50 psig);

.1 pressure drop at design flow equal to critical pressure drop (45% of absolute inlet pressure).

.4 modulating service with inlet steam gauge pressure over 350 kPa (50 psig);

.1 pressure drop as scheduled.

.5 modulating steam loads greater than 570 kW (2000 lbs./hr) at all pressures;

.1 provide two valves, connected in parallel and controlled in sequence, with first valve in opening sequence sized for [a] and second for [b] of steam load.

.9 Valve actuators for service other than radiation, radiant panel and reheat coil valve applications;

.1 sized and selected in accordance with manufacturer's specifications,

.2 electric/electronic for two position, or proportional control action, coupled to valves with linkage,

.3 electronic interface control board, solid state drive, reversible motor, oil immersed gear train,

.4 electronic overload or digital rotation sensing circuitry to protect damper operator through entire range of rotation,

.5 span and zero travel adjustment,

.6 position feedback signal on actuators used for proportional control,

.7 provision for manual positioning of valve when actuator is not powered,

.8 spring return mechanism to return valve to "normal" position on power failure (i.e. Normally Open (NO), or Normally Closed (NC)),

.9 control signals:

.1 0 to 10VDC or 0 to 20 ma,

.2 modulate damper position with 2 to 10VDC or 4 to 20 ma input signal operating range when in proportional service.

.3 input type and range as suitable for interfacing to output of BAS controller

.10 feedback signals:

.1 two independent adjustable travel limit switches and wiring to BAS for indication of valve position.

.11 general purpose, drip proof NEMA 2 die-cast housing with corrosion resistant steel cover for indoor applications, watertight NEMA 4 enclosure for outdoor use,

.12 electric actuators suitable for operation down to -35°C where installed outdoors.

.10 Valve actuators for service on radiation, radiant panel, and reheat coil valve applications;

.1 output shaft driven by gear train mechanism.

.2 reversible motor with automatic load limit,

.3 input type and range as suitable for interfacing to output of BAS controllers,

.4 adjustable span and offset travel,

.5 position feedback signal on actuators used for proportional control,

.6 general purpose, dustproof, die-cast aluminum housing,

.7 actuator rotation limit.

.11 “Energy Valves” (Heating or Cooling);

.1 Belimo Energy Valve, pressure independent complete with Power Control and Belimo Delta T Manage logic built in to monitor coil performance and optimize the available energy of the coil by maintaining Delta T, standard analog signal and feedback wiring and connection to the BAS via BACnet MS/TP and built-in web server for visualization of the valves’ operation in real time.

.12 Unless otherwise specified, pneumatic valve operators are to be renewable neoprene diaphragm piston type. Pneumatic operators used to sequence multiple valves must be equipped with a pilot positioner to ensure proper sequence of each valve and allow for an adjustable "dead band" between heating and cooling valves.

2.3 CONTROL DAMPERS AND OPERATORS

.1 T. A. Morrison & Co. Inc. "TAMCO" 100 mm (4') deep, flanged, AMCA low leakage certified aluminium dampers. Dampers for modulating and mixing applications are to be parallel blade type. Dampers for open-shut service are to be opposed blade type. Maximum blade length is to be 1 m (4'). Dampers greater than 2 sections wide are to be complete with a jackshaft. Each damper is to be complete with:

.1 extruded 6063T5 aluminum frame and airfoil blades, each with an integral slot to receive a gasket;

.2 extruded TPE frame gaskets and extruded EPDM blade gaskets;

.3 slip-proof aluminium and corrosion resistant plated steel linkage of a metal thickness to prevent warping or bending during damper operation, concealed in frame, equipped with seal-sealing and self-lubricating bearings consisting of a Celcon inner bearing fixed on hexagonal blade pin and rotating in a polycarbonate outer bearing inserted in frame.

.2 For standard damper(s), Series 1500 as above.

.3 For insulated damper(s), Series 9000 as above but with all 4 sides of frame insulated with polystyrene, and blades thermally broken and insulated with expanded polyurethane foam.

.4 For stainless steel dampers, as above but constructed of type 316 stainless steel and equipped with Teflon blade bearings.

.5 Each damper motor is to be shaft mounted, spring return, fail safe in the normally open or normally closed position, sized to control damper against maximum pressure or dynamic closing pressure, whichever is greater, to suit sizes of dampers involved, and to provide sufficient force to maintain damper rated leakage characteristics. Each operator is to be complete with a damper position indicator, and external adjustable stops to limit length of stroke in either direction, and is to be mounted on a corrosion resistant adjustable bracket. Operating arms are to have double yoke linkages and double set screws for fastening to damper shaft. Operators for dampers to be connected to building fire alarm system or to freeze protection devices are to be equipped with

additional relays to permit dampers to respond and go to required position in less than 15 seconds upon receipt of a signal. Operator enclosures are to be suitable in all respects for environment in which they are located.

.6 Electric damper operators are to be equal to Belimo EF Series 24 volt or 120 volt AC spring return, direct coupled electric motor operators for either modulating or 2-position control as required. Each operator is to be overload protected and complete with an enclosure to suit the mounting location.

.7 All exhaust dampers shall be complete with Nailor “1380” heavy duty backdraft damper.

.8 Pneumatic damper operators are to be replaceable elastomer diaphragm piston type, suitable in all respects for damper sequence.

2.4 LOCAL CONTROL PANELS

.1 NEMA 1 (NEMA 2 in sprinklered areas) wall mounting, enamelled steel barriered enclosures sized to suit the application with 20% spare capacity, a perforated sub-panel, numbered terminal strips for all low and line voltage wiring, hinged door, and slotted flush latch.

2.5 CONTROL SYSTEM COMPONENTS

.1 Components specified below are required for control of equipment and systems in accordance with drawing control diagrams and sequences of operation. Not all required components may be specified.

.2 Sensor/transmitter input devices must be suitable in all respects for the application and mounting location. Devices are as follows:

.1 unless otherwise specified, temperature sensors are to be resistance type, either 2-wire 1000 ohm nickel RTD or 2-wire 1000 ohm platinum RTD with accuracy (includes errors associated with sensor, lead wire, and A to D conversion), equipped with type 316 stainless steel thermowells for pipe mounting applications, as follows:

.1 chilled water, room temperature, and duct temperature points, ±1°C (±0.5°F);

.2 all other points, ±0.75°C (±1.3°F).

.2 unless otherwise specified, room temperature sensors constructed to be selected in accordance with the following classifications:

.1 Type 1: Space temperature sensor (private/non-public areas);

.1 for measurement of space temperature only as shown on the floor plans and/or as described in the Sequence of Operation;

.2 set-point adjustment shall be accessible through the cover;

.3 sensor operating temperature range from 4°C to 60°C (40°F to 140°F);

.4 surface mounted plastic mono-chromatic guard with surface mounting plate and wall anchors;

.5 mono-chromatic guard secured to mounting plate by screws;

.2 Type 2: Space temperature sensor (public areas or secure areas);

.1 for measurement of space temperature of space temperature only in areas subject to vandalism as shown on the floor plans and/or as described in the Sequence of Operation;

.2 sensor operating temperature range from 4°C to 60°C (40°F to 140°F);

.3 stainless steel flat plate surface type with sensor epoxy-bonded to back of cover plate;

.4 tamperproof/secure concealed fasteners;

.5 set-point adjustment is to be concealed behind the cover.

.3 Type 3: Adjustable space temperature sensor with display (Private Areas, Office areas);

.1 for measurement and adjustment of space temperature as shown on the floor plans and/or as described in the Sequence of Operation;

.2 digital set point operating temperature adjustment range from 4°C to 60°C (40°F to 140°F);

.3 surface mounted plastic mono-chromatic guard with surface mounting plate and wall anchors;

.4 mono-chromatic guard secured to mounting plate by screws;

.5 on/off button to allow occupant override feature;

.6 three-digit LED digital temperature display with 0.2° display resolution;

.7 5% to 95% relative humidity, non-condensing;

.8 minimum/maximum limit set point values adjustable from the BAS operator interface and controller.

.9 set-point adjustment is to be accessible through the cover.

.3 outside air sensors designed and constructed for an ambient temperature of -25°C to 60°C (-13°F to 140°F) and 5% to 95% relative humidity, non-condensing, complete with a NEMA 3R enclosure, solar shield, a weatherproof seal at all wall penetrations, and a perforated plate surrounding sensor element where exposed to wind velocity pressure;

.4 insertion duct mounting sensors type with lock nut and mounting plate, designed to mount in an electrical box (weather-proof with gasket and cover where outside) through a hole in duct;

.5 for ducts greater than 1.2 m (4') or for ducts where air temperature stratification occurs, averaging type sensors with multiple sensing points, and for plenums for applications such as mixed air temperature measurement to account for air turbulence and/or stratification, an averaging string of sensors with capillary supports on the sides of duct/plenum;

.6 Where both temperature and humidity are shown to be measured at same location or in same airstream, use of single measuring unit is permitted provided that features and performance of both temperature sensor and humidity sensor are in accordance with requirements of this specification.

.3 factory solid-state relative humidity sensors with an element that resists contamination, weather-proof with a NEMA 3R enclosure for outside air applications, supplied with a type 304 stainless steel probe with mounting bracket and hardware for duct mounting, each complete with a factory calibrated humidity transmitter which is accurate (including lead loss and analog to digital conversion) to 3% between 25°C to 60°C (-13°F to 140°F) and 5% to 95% relative humidity, non-condensing and complete with non-interactive span and zero adjustments, and a 2-wire isolated loop powered, 4-20 mA, 0 to 100% linear proportional output;

.4 Pressure transmitters are to be constructed to withstand 100% pressure over-range without damage and to hold calibrated accuracy when subject to a momentary 40% over-range input. Pressure transmitters are to transmit a 0 to 5 VDC, 0 to 10 VDC, or 4 to 20 mA output signal. Differential pressure transmitters used for flow measurement are to be sized to the flow sensing device and supplied with a tee fitting and shut-off valves in the high and low sensing pick-up lines to allow permanent ease of use connection for balancing, etc. Transmitter housing is to suit mounting location. Standalone pressure transmitters are to be mounted in a minimum NEMA 1 (NEMA 2 in sprinklered area) by-pass valve assembly panel with high and low connections piped and valved, air bleed units, by-pass valves, and compression fittings. Transmitters are to be as follows:

.1 low differential water pressure, 0 to 5 kPa (0 to 20" wc): equal to Setra or Mamac industrial quality transmitter capable of transmitting a linear 4 to 20 mA output signal in response to variation of flow meter differential pressure or water pressure sensing points, each complete with non-interactive zero and span adjustments adjustable from outside the cover, and performance as follows:

.1 maintain accuracy up to 20 to 1 ratio turndown;

.2 reference accuracy: +0.2% of full scale.

.2 medium to high differential water pressure, over 5 kPa (20" wc): equal to Setra or Mamac transmitters as specified above for low pressure transmitters but with a pressure range of from 2.5 kPa (10" wc) to 2070 kPa (300 psi), a reference accuracy of ±1% of full span (includes non-linearity, hysteresis, and repeatability);

.3 building differential air pressure: equal to Setra or Johnson Controls Inc. industrial quality transmitter with a range suitable for the application, capable of transmitting a linear 4 to 20 mA output in response to variation of differential pressure or air pressure sensing points, each complete with non-interactive zero and span adjustments adjustable from outside the cover, and performance as follows:

.1 maintain accuracy up to 20 to 1 ratio turndown;

.2 reference accuracy: +0.2% of full span.

.4 low differential air pressure, 0 to 1.25 kPa (0" to 5" wc): equal to Setra or Johnson Controls Inc. industrial quality transmitter with a range suitable for the application, capable of transmitting a linear 4 to 20 mA output signal in response to variation of differential pressure or air pressure sensing points, each complete with non-interactive zero and span adjustments adjustable from outside the cover, and performance as follows:

.1 maintain accuracy up to 20 to 1 ratio turndown;

.2 reference accuracy: +0.2% of full span.

.5 medium differential air pressure, over 1.5 kPa (5" wc): equal to Setra or Johnson Controls Inc. transmitters as specified above for low pressure air transmitters but performance requirements as follows:

.1 zero and span: (c/o F.S./Deg. F); .04% including linearity, hysteresis, and repeatability;

.2 accuracy: 1% F.S. (best straight line); static pressure effect: 0.5% F. S.;

.3 thermal effects: less than +0.33 F.S./°F over 40°F to 100°F (calibrated at 70°F).

.5 Air and water flow monitoring stations and probes are to be Air Monitor Corp., Tek-Air Systems Inc., Ebtron, or Dietrich Standard products as follows:

.1 Fan Inlet Air Flow Measuring Station: At fan inlet and near exit of inlet sound trap, air flow traverse probes are to continuously monitor fan air volume and system velocity pressure, and traverse probes are to be as follows:

.1 each probe is to be of a dual manifold, cylindrical, anodized type 3003 extruded aluminium construction probe with sensors located along the stagnation plane of approaching air flow, and the static pressure manifold is to incorporate dual offset static tops on opposing sides of averaging manifold so as to be insensitive to flow angle variations for as much as ±20° in approaching air stream;

.2 each probe is not to introduce a measurable pressure drop, nor is sound level within duct to be amplified by its singular or multiple presence in air stream, and each probe is to contain multiple static and total pressure sensors places at equal distances along its length in accordance with ASHRAE Standards for duct traversing.

.2 Single Probe Air Flow Measuring Sensor: Duct mounting hot wire anemometer type which utilizes 2 temperature sensors, one is a heater element temperature sensor and the other is to measure downstream temperature, with temperature differential related directly to air flow velocity. Sensor insertion length is to be adjustable up to 200 mm (8"), and transmitter is to produce a 4 to 20 mA or 0 to 10 VDC signal linear to air velocity.

.3 Duct Flow Measuring Stations: #14 gauge galvanized steel casing with duct connection flanges of a size to mate with connecting ductwork, and complete with an air directionalizer and a 98% free area parallel cell 20 mm (¾") honeycomb profile suppressor across entering air stream to equalize velocity profile and eliminate turbulent and rotational flow from the air stream prior to measuring point, mechanically fastened to casing so as to withstand velocities of up to 1828 m (6000') per minute. Additional requirements as follows:

.1 total pressure measurement side (high side) is to be designed and spaced to requirements of Industrial Ventilation Manual, 16th Edition, page 9-5, and self-averaging manifolding is to be constructed of brass and copper components;

.2 static pressure sensing probes (low side) is to be bullet-nose shaped, per detailed radius, as illustrated in Industrial Ventilation Manual referred to above, page 9-5;

.3 main take-off point from both total pressure and static pressure manifolds is to be symmetrical, and manifolds are to terminate with external ports for connection to control tubing;

.4 each station is to be equipped with a label on casing indicating unit model number, size, area, and specified air flow capacity;

.5 each station is to have a self-generated sound rating of less than NC 40, and sound level within duct is not to be amplified nor is additional sound to be generated.

.4 Static Pressure Traverse Probe: Duct mounting, complete with multiple static pressure sensors located along exterior surface of cylindrical probe.

.5 Shielded Static Air Probe: Indoor type or outdoor type as required, each with multiple sensing ports, an impulse suppression chamber, and air flow shielding.

.6 Water Flow Monitoring: Equal to Onicon microprocessor-based electromagnetic water flow meters with an accuracy of 0.25%.

.6 Power (amps) monitoring is to be performed by a combination of a current transformer and a current transducer with transformer sized to reduce full amperage of monitored circuit to a maximum 5 ampere signal which will be converted to a 4 to 20 mA DDC compatible circuit for use by building automation system. Current transformer and current transducer are as follows:

.1 equal to Veris Industries split core current transformer with an operating frequency of from 50 Hz to 400 Hz, 0.6 kV class, 10 kV BIL insulation, and 5 ampere secondary;

.2 equal to Veris Industries current to voltage or current to mA transducer with an accuracy of ±5%, a minimum load resistance of 30 kOhm, an input of 0 to 20 amperes and an output of 4 to 20 mA, and a 24 VDC regulated power supply.

.7 Duct mounting smoke detectors supplied as part of electrical work for mounting as part of control system work.

.8 Double contact switches to monitor equipment status and safety conditions, and generate alarms when a failure or abnormal condition occurs. Status and safety switches are to be as follows:

.1 current sensing switches: equal to Veris Industries self-powered dry contact output switches for sensing run status of motor loads, each calibrated to indicate a positive run status only when motor is operating under load, and each consisting of a current transformer, a solid-state current sensing circuit, adjustable trip point, solid-state switch, SPDT relay, and a LED to indicate on or off status;

.2 air filter status switches: equal to Johnson Controls Inc. or Cleveland Controls automatic reset type differential pressure switches, each complete with SPDT contacts rated for 2 amperes at 120 VAC, a scale range and differential pressure adjustment appropriate for the service, and an installation kit which includes static pressure taps, tubing, fittings, and air filters;

.3 air flow switches: equal to Johnson Controls Inc. or Cleveland Controls pressure flow switches, bellows actuated mercury switch or snap-acting micro-switch type with an appropriate scale range and pressure adjustment;

.4 air pressure safety switches: equal to Johnson Controls Inc. or Cleveland Controls manual reset switches, each complete with SPDT contacts rated for 2 amperes at 120 VAC and an appropriate scale range and pressure adjustment;

.5 water flow switches: equal to Johnson Controls Inc. Model P74;

.6 low temperature limit switches: manual reset type equal to Johnson Controls Inc. Model A70, each complete with DPST snap acting contacts rated for 16 amperes at 120 VAC, a minimum 4.5 m (15') sensing element for mounting horizontally across duct/plenum with sensing reaction from coldest 450 mm (18") section of element, and where sensing element does not provide full coverage of air stream, additional switches are to be supplied as required.

.9 Control relays as follows:

.1 control pilot relays: equal to Johnson Controls Inc. or Lectro modular plug-in design with snap-mount mounting bases, retaining springs or clips, DPDT, 3 PDT or 4 PDT as required for the application, with contacts rated for 10 amperes at 120 VAC;

.2 lighting control relays: latching type with integral status contacts rated for 20 amperes at 120 VAC, each complete with a split low voltage coil that moves the voltage contact armature to On or Off latched position, each controlled by a pulsed tri-state output (preferred) or pulsed paired binary outputs, and each designed so power outages will not result in a change-of-state and so multiple same state commands will simply maintain commanded state.

.10 Electronic signal isolation transducers equal to Advanced Control Technologies for installation whenever an analog output signal from building automation system is to be connected to an external control system as an input (i.e. equipment control panel), or is to receive as an input signal from a remote system, and to provide ground plane isolation between systems.

.11 Each manual override station is to be complete with contacts rated minimum 1 ampere at 24 VAC and is to provide following:

.1 integral H-O-A switch to override controlled device pilot relay;

.2 status input to building automation system to indicate whenever switch is not in the Auto position;

.3 status LED to illuminate whenever output is On;

.4 override LED to illuminate whenever H-O-A switch is in either the Hand or Off position.

.12 Electronic/pneumatic transducers equal to Johnson Controls Inc. transducers with an output of from 3 to 15 psig, an input of from 4 to 20 mA or 10 VDC, manual output adjustment, a pressure gauge, and an external replaceable supply air filter.

.13 Thermostats:

.1 Wall mounting adjustable set-point thermostats complete with local temperature display, each suitable in all respects for equipment (and operating sequence) they are provided for, equipped with a thermometer, and any required mounting and connection accessories.

.2 Pneumatic thermostats are to be of bimetal element construction, double valve type, operating without constant waste of air.

.3 Line voltage thermostats are to be 115 volt.

.4 Low voltage thermostats are to be 24 volt electronic type.

.5 Set-point adjustment for thermostats in public spaces is to be concealed behind cover. Set-point adjustment for other thermostats is to be accessible through cover.

.6 Covers are to be removable, tamper-proof covers with temperature set-point and thermometer displays.

.7 Guards for thermostats are to be clear, ventilated acrylic covers with allen key locking hardware.

.14 Humidistats:

.1 Direct or reverse acting (to suit system), proportional type, adjustable humidity controllers, each corrosion resistant, suitable in all respects for the application and complete with a nylon element, replaceable cartridge type air filter, internally adjustable limit stops for maximum and minimum settings, a cover, and required mounting and connection accessories.

.2 Pneumatic humidistats are to be 2 pipe type and complete with plug-in air connections.

.3 Electric humidistats are to be line voltage (115 volt), or 24 volt electronic type.

.4 Wall mounting humidistats are to be complete with a tamper-proof display type cover.

.5 Duct mounting humidistats are to be complete with a display type cover, duct sampling chamber with 300 mm (12") long extruded pick-up tube for duct mounting, a moulded mounting base, and a ventilated cover.

.15 Hardware to permit building automation system control and monitoring of input/output points in accordance with Section 25 05 02 - Building Automation System, points schedule, and drawing control diagrams and operation sequences. All such hardware is to be suitable in all respects for interface with the building automation system.

2.6 SYSTEM WIRING MATERIALS

.1 System wiring, conduit, boxes, and similar materials are to be in accordance with requirements specified in appropriate Section(s) of Electrical Work specification.

2.7 CONTROL AIR FILTER AND PRV ASSEMBLIES

.1 Combination filter/PRV assembly with quantities to suit control system capacity requirements, each assembly complete with:

.1 oil/particle filter with drain port and replaceable coalescing filter element in a transparent polycarbonate bowl with perforated metal shield;

.2 adjustable pressure reducing valve with inlet and outlet pressure gauges and outlet safety pressure relief valve;

.3 wall mounting bracket.

.2 Each filter is to remove both 0.08 micron diameter particles and 0.01 micron diameter oil aerosol, and filter elements are to be removable without disconnecting any piping.

PART 3 - EXECUTION

3.1 GENERAL RE: INSTALLATION OF CONTROLS

.1 Provide complete systems of control and instrumentation to control and supervise building equipment and systems in accordance with this Section and drawings.

.2 Control systems are to generally be as indicated on drawing control diagrams and are to have all the elements therein indicated or implied.

.3 Control diagrams show only the principal components controlling the equipment and systems. Supplement each control system with all relays, transformers, sensors, etc., required to enable each system to perform as specified and to permit proper operation and supervision.

3.2 INSTALLATION OF CONTROL AIR PIPING AND TUBING

.1 Provide required control air piping and tubing.

.2 Connect new control air piping/tubing to existing pneumatic control air supply.

.3 Piping/tubing is to be as follows:

.1 for piping mains and branches, type "M" seamless copper;

.2 for exposed connections to control components, hard or soft copper tubing;

.3 for tubing in accessible ceiling spaces, plenum rated polyethylene, neatly bundled with plastic ties and properly supported;

.4 for connections to control components within control cabinets, soft copper or plenum rated polyethylene tubing.

.4 Properly install and support piping and tubing. Provide suitably sized trap legs with drain valves at all low points to prevent condensation pockets.

.5 Solder all copper joints except at instruments or panels where compression fittings are to be used.

3.3 SUPPLY OF CONTROL AIR DAMPERS AND OPERATORS

.1 Unless otherwise specified, supply required control dampers. Hand dampers to sheet metal trade at site in location where they are required for installation as part of sheet metal work. Ensure each damper is correctly located and mounted.

.2 Unless otherwise specified or scheduled, insulated dampers to be provided for all outdoor air intake and exhaust air applications.

.3 Provide linkage and operators for dampers. Wherever possible locate damper operators so they are accessible from outside duct, plenum, and equipment casings. Bracket mount operators on ducts or plenums clear of insulation where applicable.

.4 Where sequence operation is indicated, or where multiple operators drive a series of dampers, provide pilot positioners to couple their action.

.5 Ensure dampers located in ductwork other than galvanized steel are constructed of type 316 stainless steel.

3.4 SUPPLY OF AUTOMATIC CONTROL VALVES AND OPERATORS

.1 Unless otherwise specified, supply required automatic control valves. Hand valves to appropriate piping trades at site in locations they are required for installation as part of piping work. Ensure each valve is properly located and installed.

.2 Provide an operator for each valve.

3.5 INSTALLATION OF THERMOSTATS

.1 Unless otherwise noted, provide required thermostats.

.2 Provide a ventilated clear acrylic cover for each thermostat located in finished areas, and a wire type guard for each thermostat located in unfinished areas and in areas such as mechanical rooms where thermostat is subject to damage.

.3 Unless otherwise indicated, mount room thermostats 1.5 m (5 ft) above finished floor level. Thermostats intended to be used by building occupants in a barrier-free path of travel to be mounted at 1.2 m. Confirm exact location of all thermostats prior to roughing-in.

.4 Provide stand-off mounting and an insulated sub-base for thermostats on outside walls.

.5 Perform control wiring associated with installation of electric or electric-electronic thermostats.

3.6 INSTALLATION OF CONTROL SYSTEM COMPONENTS

.1 Provide required control system components and related hardware. Refer to drawing control diagrams and sequences.

.2 Where components are pipe, duct, or equipment mounted supply components at proper time, coordinate installation with appropriate trade, and ensure components are properly located and mounted.

3.7 CONTROL WIRING

.1 Perform required control wiring work for control systems except:

.1 power wiring connections to equipment and panels, except as noted below;

.2 control wiring associated with mechanical plant equipment and systems whose control is not part of work specified in this Section;

.3 starter interlock wiring.

.2 Except as specified below, install wiring in conduit. Unless otherwise specified, final 600 mm (2’) connections to sensors and transmitters, and wherever conduit extends across flexible duct connections is to be liquid-tight flexible conduit.

.3 Control wiring in ceiling spaces and wall cavities may be plenum rated cable installed without conduit but neatly harnessed, secured, and identified.

.4 Wiring work is to be in accordance with certified wiring schematics and instructions, and wiring standards specified in appropriate Sections of Electrical Work Specification.

3.8 IDENTIFICATION AND LABELLING OF EQUIPMENT AND CIRCUITS

.1 Refer to identification requirements specified in Section 20 05 00 – Common Work Results for Mechanical.

.2 Identify equipment as follows:

.1 enclosures and components: engraved laminated nameplates with wording listed and approved prior to manufacture of nameplates;

.2 wiring: numbered sleeves or plastic rings at both ends of conductor, with numbering corresponding to conductor identification on shop drawings and "as-built" record drawings.

3.9 TESTING, ADJUSTING, CERTIFICATION, START-UP, AND TRAINING

.1 When control work is complete, check installation of components and wiring connections, make any required adjustments, and coordinate adjustments with personnel doing HVAC testing, adjusting and balancing work.

.2 For equipment/system manufacturer certification requirements, refer to Section 20 05 00 – Common Work Results for Mechanical.

.3 For equipment/system start-up requirements, refer to Section 20 05 00 – Common Work Results for Mechanical.

.4 Include for 2 full, 8 hour days on-site operation demonstration and training sessions. Training is to be a full review of all components including but not limited to a full operation and maintenance demonstration, with abnormal events.

.5 Include for 2 follow-up site training and troubleshooting visits, one 6 months after Substantial Completion and other at end of warranty period, both when arranged by Owner and for a full, 8 hour day to provide additional system training as required, and to demonstrate troubleshooting procedures.

END OF SECTION

PART 1 - GENERAL

1.1 ABBREVIATIONS AND DEFINITIONS

.1 Abbreviations used in this Specification are as follows:

.1 BAS building automation system;

.2 DDC direct digital controls;

.3 LAN local area network;

.4 PC personal computer.

1.2 SUBMITTALS

.1 Submit shop drawings/product data sheets for BAS components. As a minimum, submit the following:

.1 BAS network architecture, including modes and interconnections;

.2 systems schematics, sequences, and flow diagrams;

.3 points schedule for each point in BAS, including point type, object name, expanded ID, display units, controller type, and address;

.4 samples of graphic display screen types and associated menus;

.5 detailed Bill of Materials for each system or application, identifying quantities, part numbers, descriptions, and optional features;

.6 control damper schedule including a separate line for each damper and a column for each of damper attributes including code number, fail position, damper type, damper operator, duct size, damper size, mounting and actuator type;

.7 control valve schedules including a separate line for each valve and a column for valves as for control dampers;

.8

1.3 CLOSEOUT SUBMITTALS

.1 Submit a site inspection and start-up report from manufacturer’s representative as specified in Part 3 of this Section.

.2 Record "as-built" drawings are to include:

.1 schematic outline of BAS for quick reference of overall system scope;

.2 adequate record of work as installed, including locations and routing of system wiring.

.3 O&M Manual is to include:

.1 hardware specification manual which gives a functional description of hardware components;

.2 operator’s manual which outlines concise instructions for operation of system and an explanation and recovery route for system alarms;

.3 engineering manual which outlines and defines system set-up, definition and application;

.4 data manual which indicates applications data programmed into system;

.5 system software documentation.

1.4 QUALITY ASSURANCE

.1 BAS hardware and software is to be installed by experienced personnel employed and trained by manufacturer/supplier of field equipment controllers. System wiring is to be installed by journeyman electricians or under direct on-site supervision of journeyman electricians.

PART 2 - PRODUCTS

2.1 GENERAL RE: BUILDING AUTOMATION SYSTEM

.1 Control system components (field devices) other than those specified in this Section are generally specified in Section 25 05 01 - Automatic Control Systems. Components factory installed with equipment or supplied with equipment are specified in mechanical work Sections with equipment.

.2 BAS specified in this Section represents an expansion of the existing Johnson Controls DDC building automation system in accordance with drawing control diagrams and sequences, and points lists.

.3 Manufacturers:

.1 Johnson Controls Inc.;

2.2 FIELD EQUIPMENT CONTROLLERS

.1 Each field equipment controller is to be a fully user programmable BACnet Testing Labs (BTL) certified and labelled digital controller that communicates via BACnet MS/TP protocol. Each controller is to be housed in a plenum rated plastic housing with removable base to permit pre-wiring of analog and binary input/output field points without controller in place.

.2 Each controller is to employ a finite state control engine to eliminate unnecessary conflicts between control functions at crossover points in their operational sequences, and is to be factory programmed with a continuous adaptive tuning algorithm that sense changes in physical environment and continually adjusts loop tuning parameters appropriately.

.3 Each field equipment controller is to:

.1 include troubleshooting LED’s to identify following conditions:

.1 Power On;

.2 Power Off;

.3 Download or Start-Up In Progress-Not Ready For Normal Operation;

.4 No Faults;

.5 Device Fault;

.6 Field Controller Bus-Normal Data Transmission;

.7 Field Controller Bus-No Data Transmission;

.8 Field Controller Bus-No Communication;

.9 Sensor Actuator Bus-Normal Data Transmission;

.10 Sensor Actuator Bus-No Data Transmission;

.11 Sensor Actuator Bus-No Communication.

.2 support universal inputs, configured to monitor any of following:

.1 analog input, voltage mode;

.2 analog output, current mode;

.3 analog input, resistive mode;

.4 binary input, dry contact maintained mode;

.5 binary input, pulse counter mode.

.3 support binary inputs configured to monitor either of following:

.1 dry contact maintained mode;

.2 pulse counter mode.

.4 support analog outputs configured to output either of following:

.1 analog output, voltage mode;

.2 analog output, current mode.

.5 support binary outputs, 24 VAC Triac;

.6 support configurable outputs capable of following:

.1 analog output, voltage mode;

.2 binary output mode.

.7 have ability to reside on a master-slave/token-passing field controller bus supporting BACnet standard protocol as follows:

.1 support communications, including input/output communications between field controllers and network automation engines;

.2 support a minimum of one hundred input/output modules and field equipment controllers in any combination;

.3 operate at a maximum distance of 4560 m (15,000') between field controller and furthest connected device.

.8 have ability to monitor and control a network of sensors and actuators over a master-slave/token-passing sensor-actuator bus supporting BACnet standard protocol as follows:

.1 bus is to support a minimum of ten devices per trunk;

.2 bus is to operate at a maximum distance of 365 m (1200') between field controller and furthest connected device.

.9 capability of executing complex control sequences involving direct wired input/output points as well as input and output devices communicating over field controller bus or sensor-actuator bus;

.10 support, but not limited to, following:

.1 hot water, chilled water/central plant applications;

.2 custom air handling units for special applications;

.3 terminal units;

.4 special programs as required for systems control.

.11 support a password protected local controller LCD back-lit display with 6 key keypad as an integral part of field controller or as a remote device communicating over sensor-actuator bus to permit user to view monitored points without logging into system, and to view and change set-points, modes of operation, and parameters.

2.3 INPUT/OUTPUT MODULES

.1 Input/output modules to facilitate additional inputs and outputs for use in field equipment controllers are to be similar to field equipment controllers but less display and with a minimum of 4 and a maximum of 17 points.

2.4 WIRING MATERIALS

.1 System wiring, conduit, boxes, and similar materials are to be in accordance with requirements specified in Division 26 – Electrical.

PART 3 - EXECUTION

3.1 GENERAL RE: INSTALLATION OF THE BAS

.1 Provide an expansion of the existing building automation system in accordance with requirements of this Section of the Specification, Section 25 05 01 - Automatic Control Systems, drawings, and the input/output points list(s).

.2 BAS to include updates to existing BAS graphics and sequences to suit the refurbished and new units.

.3 Temporary air handling units to also be tied into the BAS with sequences/graphics updated for each phase and/or unit it is backing up.

.4 Unless otherwise specified, perform BAS work in accordance with system manufacturer's instructions.

3.2 INSTALLATION OF DIRECT DIGITAL CONTROL SYSTEM COMPONENTS

.1 Provide required direct digital control hardware, software, accessories, and wiring for a complete BAS. Refer to drawing control diagrams and sequences, points list(s), and Section 25 05 01 - Automatic Control Systems.

.2 DDC work is to be performed by skilled technicians, properly trained and are qualified for this work.

.3 Materials and equipment used are to be standard components, regularly manufactured for this and/or other systems, and not custom designed especially for this project. Systems and components are to have been thoroughly tested and proven in actual use.

.4 System is to be modular, permitting expansion by adding hardware and software without changes in communication or processing equipment.

.5 Provide new communications bus as required complete with required ancillaries. Connect and extend existing communications bus.

.6 Provide 1 supervisory controller (SC) per cabinet fan (air handler). Provide necessary field equipment controllers (FEC).

.7 Provide necessary quantity of SC to accomplish requirements of this specification, and to minimize number of mechanical systems that would be inoperative in event of a FEC failure. A maximum of 2 major mechanical systems are to be controlled by 1 FEC.

.8 Surface wall mount SC and FEC control units in Mechanical Rooms ensuring they are not mounted on vibrating surfaces, and connect to 15A-1P circuit breakers dedicated for control system applications, in branch panel circuit boards in adjacent spaces. Power wiring from control units to circuit breakers is to be the responsibility of the controls contractor. Wiring is to be in conduit and conduit and wiring are to be in accordance with standards and requirements of Division 26 – Electrical. Refer to electrical drawings for locations of branch circuit panelboards with dedicated circuits for controls system applications.

.9 Indicate via number, and systems controlled by SC and FEC. Indicate via a lamacoid label mounted inside panel the identification number of electrical panel supplying power to SC and FEC.

.10 Submit schedule(s) of input/output points to Consultant for review. Directly connect each SC and FEC to point devices in accordance with control diagrams and schedule of miscellaneous control points as shown on drawings. Sensor wires for each analogue input are to be No. 18 AWG twisted-shielded cable. Other types of wire required are to be as recommended by system supplier.

.11 Provide required sensors, remote devices, etc., and required interface accessories. Mount duct and/or plenum sensors half-way across duct or plenum.

.12 Differential pressure sensor used to provide space pressurization control through regulation of return air quantities must be mounted with snubbers on indoor pressure leg to prevent sudden fluctuations caused by door openings, etc. Mount outdoor air ports in locations that minimize effects of abnormal surface flow conditions and wind gusts.

.13 Supply and turn over to Consultant prior to application for a Certificate of Substantial Performance of the Work, reports to be used in assisting Owner in defining and debugging DDC programs. These reports are to consist, as a minimum, of following:

.1 process control language (PCL) logs;

.2 control loop logs;

.3 PCL master point.

.14 Submit Point Data Input forms to Consultant that Owner will fill out with DDC system supplier's assistance. Input this point data into the system.

.15 Contacts will be supplied as part of mechanical work or electrical work for alarm and status points for systems and equipment other than building environmental systems and equipment. Connect to DDC system in accordance with point schedule.

3.3 CONTROL WIRING

.1 Perform required control wiring work for control systems except:

.1 power wiring connections to equipment and panels, except as noted below;

.2 control wiring associated with mechanical plant equipment and systems whose control is not part of work specified in this Section;

.3 starter interlock wiring.

.2 Except as specified below, install wiring in conduit. Unless otherwise specified, final 600 mm (2') connections to sensors and transmitters, and wherever conduit extends across flexible duct connections is to be liquid-tight flexible conduit.

.3 Control wiring in ceiling spaces and wall cavities may be plenum rated cable installed without conduit but neatly harnessed, secured, and identified.

.4 Wiring work is to be in accordance with BAS manufacturer’s certified wiring schematics and instructions, and wiring standards specified in electrical work Division of this Specification.

3.4 IDENTIFICATION AND LABELLING OF EQUIPMENT AND CIRCUITS

.1 Refer to Section 20 05 00 – Common Work Results for Mechanical.

.2 Identify BAS equipment as follows:

.1 enclosures: engraved laminated nameplates with lettering such as BAS Panel CP2, or BAS Relays, or BAS E/P Transformers, with all wording listed and approved prior to manufacture of nameplates;

.2 panel points: a weather-proof input/output layout sheet for each controller with the name of each point connected to controller, and associated wire labelling information;

.3 wiring: numbered sleeves or plastic rings at both ends of conductor, with numbering corresponding to conductor identification on shop drawings and "as-built" record drawings;

.4 interface components: a weather-proof layout sheet clearly illustrating/identifying purpose of each component within enclosure such that an operator or service technician can quickly identify exact use of each relay, transducer, contactor, etc., with each sheet fastened securely to back of enclosure door.

3.5 SYSTEM STARTUP

.1 For equipment/system manufacturer certification requirements, refer to Section 20 05 00 – Common Work Results for Mechanical.

.2 For equipment/system start-up requirements, refer to Section 20 05 00 – Common Work Results for Mechanical.

END OF SECTION

PART 1 - GENERAL

1.1 SECTION INCLUDES

.1 Common requirements for electrical work.

.2 Mounting heights for electrical equipment and devices.

1.2 RELATED REQUIREMENTS

.1 Provisions of this section apply to all sections of Division 26, Division 27 and Division 28.

.2 This section is to be read in conjunction with Division 00 documents, and Division 01 specification sections, which take precedence as described in CCDC 2-2008.

.1 General Conditions.

.2 Supplementary General Conditions.

.3 General Requirements.

1.3 INTENT

.1 Include all material, labour, equipment, and plant construction as necessary to make a complete installation as shown and specified hereinafter.

.2 Leave complete systems ready for continuous and efficient satisfactory operation.

.3 Discipline and Trade Jurisdiction

.1 In accordance with CCDC 2-2008 GC 1.1.7: Neither the organization of the Specifications nor the arrangement of Drawings shall control the Contractor in dividing the work among Subcontractors and Suppliers.

.2 MasterFormat's organizational structure used in a project manual does not imply how the work is assigned to various design disciplines, trades, or subcontractors. MasterFormat is not intended to determine which particular elements of the project manual are prepared by a particular discipline. Similarly, it is not intended to determine what particular work required by the project manual is the responsibility of a particular trade. A particular discipline or trade is likely to be responsible for subjects from multiple Divisions, as well as from multiple Subgroups.

1.4 DRAWINGS AND SPECIFICATIONS

.1 The drawings and specifications are complementary each to the other and what is called for by one to be binding as if called for by both. Should any discrepancy appear between the drawings and specifications, which leaves the Contractor in doubt as to the true intent and meaning of plans and specifications, a ruling is to be obtained from the Consultant in writing before submitting Bid. If this is not done, the maximum, the most expensive alternate or option will be provided in base tender bid.

.2 All drawings and all Divisions of these specifications shall be considered as a whole, and work of this Division shown anywhere therein shall be furnished under this Division.

.3 Drawings are diagrammatic and indicate the general arrangement of equipment and pathways. Most direct routing of conductors and wiring is not assured. Exact requirements are governed by architectural, structural, and mechanical conditions of the job. Consult all other drawings in preparation of the bid. Extra lengths of wiring or addition of pull and junction boxes, etc. necessitated by such conditions are to be included in the bid. Check all information and report and apparent discrepancies before submitting the bid.

.4 Contractor shall determine the exact locations of equipment and rough-ins, and the exact routing of pathways so as to best fit the layout of the job. Plan, coordinate, and establish exact locations and

routing of services with affected trades prior to installation such that services clear each other as well as other obstructions.

.5 Unless otherwise directed by Consultant, Mechanical Contractor is to determine final locations of major work within ceiling spaces.

.6 Unless otherwise shown or specified, conceal work in finished areas, and conceal work in partially finished and/or unfinished areas to extent made possible by the area construction. Install services as high as possible to conserve headroom and/or ceiling space. Notify Consultant where headroom or ceiling space appears to be inadequate prior to installation of the work.

.7 Scaling off the drawings will not be sufficient or accurate for determining these locations. Where job conditions require reasonable changes in indicated arrangement and locations, such changes shall be made at no additional cost to the Owner.

.8 Because of the scale of the drawings, certain basic items, such as junction boxes, pull boxes, conduit fittings, etc. may not be shown, but where such items are required by other sections of the specifications of where there are required for proper installation of the work, such items are to be furnished and installed.

.9 Before ordering any conduit, cable tray, conductors, wireways, raceway bus duct, fittings, etc., verify all pertinent dimensions at the job site and be responsible for their accuracy.

.10 If obvious ambiguities or omissions are noticed when tendering refer same to the Consultant for a ruling and obtain the ruling in writing in the form of an Addendum. Claims for extras for ambiguities or omission of items brought to the attention of the Consultant after the award of a contract which, due to the nature of the ambiguity or omission, should have been brought to the attention of the Consultant during the tendering period, will not be allowed.

.11 The drawings are performance drawings, diagrammatic, and show locations for apparatus and materials. The drawings are intended to convey the scope of work and do not intend to show Architectural and Structural details. The locations shown are approximate, and may be altered, when approved by the Consultant, to meet requirements of the material and/or apparatus, other equipment and systems being installed, and of the building. Do not scale drawings.

.12 Control products, products requiring maintenance, junction boxes, and similar products, particularly such products located above suspended ceilings must be located for easy access for servicing and/or removal. Products which do not meet this location requirement are to be relocated to an accessible location at no additional cost.

.13 Be responsible for making necessary changes, at no additional cost, to accommodate structural and building conditions that were missed due to lack of coordination by this Division.

.14 Where drawings indicate that acoustic tile ceiling is being suspended below existing plaster ceiling, coordinate with General Trades Contractor design of framework used to support suspended ceiling, lighting, diffusers, and other Electrical Divisions components that are mounted within or through ceiling. Do not mount devices to suspended ceiling. Secure and mount to ceiling slab above. Seal ceiling openings to maintain required fire rating.

.15 Provide any fitting, offset, transformation, etc., required to suit architectural and structural details but not shown.

1.5 WORK RESTRICTIONS

.1 Refer to Division 00 documents, and Division 01 specification sections.

.2 Existing buildings:

.1 Examine the existing building, the site and surrounding areas and by fully informed as to the conditions and limitations under which the work has to be executed. Claims for additional costs will not be entertained with respect to conditions which could reasonably been ascertained by an inspection prior to Tender closing.

.2 All work in the existing building, other than minor works required to permit construction of the new addition, is to be performed in such a manner as to not disrupt the building operations.

.3 All systems are to be kept in full operation during normal building hours.

.4 Note that any noise generating works that disrupt the building operation shall be coordinated accordingly and carried out after/before normal operating hours.

.5 Cut, modify, or extend as necessary or as directed by the Consultant, the existing material or equipment to be reused or relocated to suit work under this contract.

.6 Existing materials and equipment which are to be used in new work shall be repaired and refinished as necessary. Provide additional new materials and components as required to facilitate reinstallation of such existing materials and equipment.

.7 Co-ordinate with the Owner, and refer to General Conditions.

.8 Do work in existing areas to best suit available space and not interfere with or obstruct use of existing facilities.

.9 Where disruptions of existing services are required, coordinate shut down with the Owner's operating staff and do the work at a time and in a manner mutually acceptable. Carefully schedule disruptions to keep "down time" to a minimum.

.3 Do all cutting, patching and making good to leave in a finished condition and to make the several parts of the Work come together properly. Co-ordinate work to keep cutting and patching to a minimum.

.4 Quality of workmanship and materials used in patching, making good and refinishing of existing construction and/or compartments shall be of a standard equal to that specified for new construction and if not specified, equal to or exceeding that of original existing work.

.5 Prior to cutting openings, examine wall, floor and ceiling construction for buried electrical cables and pipes; and take adequate protection. Conduct cable locating tests to locate buried cables in existing work.

.6 Openings

.1 Supply opening sizes and locations to Consultant to allow verification of their effect on design, and for inclusion on structural drawings where appropriate.

.2 No openings are permitted through completed structure without written approval from Owner and review with Consultant. Show required openings on a copy of structural drawings. Identify exact locations, elevations, and size of proposed openings and submit to Consultant for review, well in advance of doing work.

1.6 SUBSTITUTION PROCEDURES

.1 Refer to Division 00 documents, and Division 01 specification sections for the General Provisions of the Contract.

.2 Additionally, "Approved Equal" shall be defined as an alternate approved by the Consultant.

.3 If during the tender bid process, the bidding contractor wishes to substitute the specified equipment for an "Approved Equal", the bidding contractor must submit shop drawings to the Consultant before the tender close for approval. If no substitution request is made, the as-specified equipment is that to be provided.

.4 Where several manufacturers' names are given, the first named manufacturer constitutes the basis for job design and establishes the equipment quality required to be used in this contract.

.5 This contractor, at his option, may use equipment as manufactured by the other manufacturers if listed. This contractor is responsible to ensure that all items submitted by these other manufacturers meets are requirements of the drawings and specification and fits in the allocated space. The final

determination of a product being equivalent is to be determined by the Consultant when a catalog number is not listed, or listed in part.

.6 Any material, article or equipment of other unnamed manufacturers which will adequately perform the services and duties imposed by the design and is of a quality equal to or better than the material, article or equipment identified by the drawings and specifications may be used if approval is secured in writing from the Consultant as described in the General Provisions of the Contract for Submittals. The Contractor bears full responsibility for the unnamed manufacturers' equipment adequately meeting the intent of the design. The Owner or the Consultant may reject manufacture at time of shop drawing submittal.

1.7 CONTRACT MODIFICATION PROCEDURES

.1 Unless otherwise specifically specified in Divisions 00 or 01, include for requirements herein this article.

.2 Whenever Consultant proposes in writing to make a change or revision to design, arrangement, quantity, or type of any work from that required by Contract Documents, prepare and submit to Consultant for review and Owner approval, a quotation being proposed cost for executing change or revision.

.3 Quotation to be a detailed and itemized estimate of product, labour, and equipment costs associated with change or revision, plus overhead and profit percentages and applicable taxes and duties.

.4 Overhead and profit percentages are specified in Division 00 for additional work under Contract as approved by Owner and reviewed with Consultant.

.5 Unless otherwise specified in Divisions 00 or 01, following additional requirements apply to quotations submitted:

.1 when change or revision involves deleted work as well as additional work, cost of deleted work (less overhead and profit percentages but including taxes and duties) is to be subtracted from cost of additional work before overhead and profit percentages are applied to additional work;

.2 material costs are not to exceed those published in local estimating price guides (i.e. NECA, RS Means);

.3 electrical material labour unit costs are to be in accordance with National Electrical Contractors Association Manual of Labor Units at difficult level, less 25%;

.4 mechanical material labour unit costs are to be in accordance with Mechanical Contractors Association of America Labor Estimating Manual, less 25%;

.5 costs for journeyperson and apprentice labour must not exceed prevailing rates at time of execution of Contract and must reflect actual personnel performing work;

.6 cost for site superintendent must not exceed 10% of total hours of labour estimated for change or revision, and change or revision must be such that site superintendent's involvement is necessary;

.7 costs for rental tools and/or equipment are not to exceed local rental costs;

.8 overhead percentage will be deemed to cover quotation costs other than actual site labour and materials, and rentals;

.9 quotations, including those for deleted work, to include a figure for any required change to Contract time.

.6 Quotations submitted that are not in accordance with requirements specified above will be rejected and returned for re-submittal. Failure to submit a proper quotation to enable Consultant to expeditiously process quotation and issue a Change Order will not be grounds for any additional change to Contract time.

.7 Make requests for changes or revisions to work to Consultant in writing and, if Consultant agrees, will issue Notice of Change.

.8 Do not execute any change or revision until written approval for change or revision has been obtained from Owner and reviewed with Consultant.

1.8 PROGRESS PAYMENT BREAKDOWN

.1 Prior to submittal of first progress payment draw, submit a detailed breakdown of work cost to assist Consultant in reviewing and approving progress payment claims.

.2 Payment breakdown is subject to Consultant's approval and progress payments will not be processed until an approved breakdown is in place. Breakdown is to include one-time claim items such as mobilization and demobilization, insurance, bonds (if applicable), shop drawings and product data sheets, commissioning including system testing and verification, and project closeout submittals.

.3 Indicate equipment, material and labour costs for site services (if applicable) and indicate work of each trade in same manner as they will be indicated on progress draw.

1.9 PHASING

.1 Include for scheduling, co-ordination, and construction phasing to suit project as specified in Division 01 and on drawings. Review exact phasing requirements with Consultant prior to start of Work.

.2 Protect existing areas above, below and adjacent areas of Work from any debris, noise, or interruptions to existing services to satisfaction of Owner and Consultant. Maintain in operation existing services to these areas to allow Owner to continue use of these areas. If services that are required to be maintained run through areas of renovations, provide necessary protection to services or reroute, to approval of Owner and Consultant. Include for required premium time work to meet these requirements.

.3 Work being performed within occupied spaces and work affecting surfaces adjacent to occupied spaces may need to be performed after regular business hours. For areas where spaces are used by Owner on a 24 hours basis or over various hours, coordinate hours of work with Owner on a regular basis to suit Owner's schedule. Execute work at times confirmed with and agreed to by Consultant and Owner, so as not to inconvenience Owner's occupation or in any way hinder Owner's use of building. Include for required premium timework to meet these requirements.

.4 Project partial occupancy permits to be required throughout project. Provide for each partial permit, local governing authority certificate and any other testing/verification certificates for systems.

1.10 COORDINATION

.1 Coordinate work with other trades to avoid conflict and to provide correct rough-in and connection for equipment furnished under other trades that require electrical connection. Inform Contractors of other trades of the required access to and clearances around electrical equipment to maintain serviceability and code compliance.

.2 Verify equipment dimensions and requirements with provision specified under this Section. Check actual job conditions before fabricating work. Report necessary changes in time to prevent needless work. Changes or additions subject to additional compensation, which are made without written authorization and an agreed price, shall be at Contractor's risk and expense.

.3 Read specifications and drawings of other trades and conform with their requirements before proceeding with any work specified in this Division related to other trades. Co-operate with all other trades on the job, so that all equipment can be satisfactorily installed, and so that no delay is caused to any other trades.

.4 Coordinate utility service outages with the owner. Prior to any outage or interruption, inform Owner and Consultant in writing 10 working days in advance of proposed outage or interruption and obtain written consent to proceed. Do not shut-down or interrupt any system or service without such written consent. Shutdowns of some essential services may require additional advance notification time.

.5 Perform work associated with shut-downs and interruptions as continuous operations to minimize shut-down time and to reinstate systems as soon as possible, and, prior to any shut-down. Disable system only to make switch overs and connections. Ensure materials and labour required to complete the work for which shut-down is required are available at site.

.6 Provide temporary wiring and connections to maintain existing systems in service during construction. When work must be performed on energized equipment or circuits, use personnel experienced in such operations.

.7 Co-ordinate work with all trades to ensure a proper and complete installation. Notify all trades concerned of the requirement for openings, sleeves, insets and other hardware necessary for the installation and, where work is to be integrated with the work of other trades or is to be installed in close proximity with the work of other trades, carefully co-ordinate the work prior to installation.

.8 Systems Coordination

.1 Be responsible for and perform specific coordination of various low voltage systems supplied by Electrical Divisions and also with systems supplied by other Divisions of Work. Include for but not be limited to provision of following, as applicable:

.1 coordinate with General Contractor and other Subcontractors, various systems of trades which in any way are interfaced with or monitored by or integrated to, or need to be coordinated with;

.2 prepare systems coordination drawings detailing related system coordination and integration points being monitored and/or controlled; submit coordination drawings as part of shop drawing submission;

.3 coordinate security system requirements with successful door hardware supplier and prepare detailed coordination drawings of component installations, wiring and conduit layouts, division of responsibility between various trades, etc.; review security system requirements with associated door hardware (electromagnetic locks, electric strikes, etc.), to ensure proper sequence of operation and door functionality is provided to suit each door configuration; prepare detailed door functionality of each door configuration and submit for review by Consultant;

.4 review systems requirements for component back boxes and conduits; ensure that system of conduits and boxes meet respective system wiring bending radii requirements;

.5 review specifications of each trade/Division (i.e. for BAS points, elevator requirements, electrical devices in millwork or prefabricated service consoles, outlet box and back box requirements), to ensure proper power supplies, interconnecting wiring requirements and back box/ outlet box requirements;

.6 review with manufacturers coordination and integration requirements of their systems;

.7 review each systems communication protocols to ensure they are compatible and can communicate with each other as required;

.8 review system shop drawings prior to submission to Consultant, to verify that each system has been coordinated with other systems and that required options and features are selected to meet coordination requirements;

.9 be present at testing and commissioning functions of each system and provide technical assistance with regards to system operations;

.10 be "on-site" coordinator of respective system trades with regards to respective system coordination of installation and testing;

.11 liaise with Consultant with regards to ensuring that systems coordinate and integrate properly to satisfaction of Owner;

.12 document coordination and integration requirements and maintain records for submission as part of shop drawings;

.13 respond to coordination and integration requirements and be responsible for such work;

.14 where a system integrator has been included for, coordinate integration requirements with system integrator.

.9 Working Detail Drawings

.1 The contractor is to prepare working detail drawings supplementary to the contract drawings, when deemed necessary by the Consultant, for all areas where a multiplicity of materials and or apparatus occur, or where the work due to architectural and structural considerations involves special study and treatment. Such drawings may be prepared jointly by all trades affected, or by the one trade most affected with due regard for and approval of the other trades, all as the Consultant will direct in each instance. Such drawings must be reviewed by the Consultant before the affected work is installed.

.2 Carry out all alterations in the arrangement of work which has been installed without proper study and approval, even if in accordance with the contract documents, in order to make such work come within the finished lines of walls, floors and ceilings, or to allow the installation of other work, without additional cost. In addition, make any alterations necessary in other work required by such alterations, without additional cost.

1.11 SUBMITTAL PROCEDURES

.1 Before delivery to site of any item of equipment, submit shop drawings complete with all data, pre-checked and stamped accordingly, for review by the Consultant. Indicate project name on each brochure or sheet, make reference to the number and title of the appropriate specification section, type identifier such panelboard ID or luminaire type as indicated on appropriate schedule, and provide adequate space to accommodate the Consultant’s review stamp(s).

.2 Verify field measurements and affected adjacent Work are coordinated, including passageway clearances for movement of equipment into location.

.3 Submit shop drawings to the Consultant in electronic (PDF) format, as coordinated after award of contract. Where submittals are derived from digital originals, do not print and rescan documents; submittals made as such will be immediately rejected.

.4 Submit a schedule of shop drawings within one week after award of contract. Group submittals by specification division as appropriate.

.5 Shop Drawings

.1 Submit for review, properly identified shop drawings showing in detail the design and construction of all equipment and materials as requested in sections of the specification governed by this Section.

.2 Obtain and comply with the manufacturer's installation instructions.

.3 Submit for review, drawings showing in detail design, construction, and performance of equipment and materials as requested in Specification. Include minimally for preparation and submission of following, as applicable:

.1 product literature cuts;
.2 equipment data sheets;
.3 equipment dimension drawings;
.4 system block diagrams;
.5 sequence of operation;
.6 connection wiring schematic diagrams;
.7 functionality with integrated systems.

.4 Each shop drawing or product data sheet is to be properly identified with project name and product drawing or specification reference. Shop drawing or product data sheet dimensions are to match dimension type on drawings.

.5 Each system and each major component are to be separate shop drawing submissions. Shop drawings for common devices such as devices of each system are to be submitted together.

.6 Obtain shop drawings for submission from product manufacturer's authorized representatives and supplemented with additional items specified herein.

.7 Supply equipment loads (self-weight, operating weight, housekeeping pad, inertia pads, etc.) to Consultant, via shop drawing submissions, prior to construction.

.8 Do not order product until respective shop drawing review process has been properly completed by Consultant.

.9 Where extended warranties are specified for equipment items, submit specified extended warranty with shop drawing submittal.

.10 Endorse each shop drawing copy "CERTIFIED TO BE IN ACCORDANCE WITH ALL REQUIREMENTS", stamp each copy with your company name, date each copy with the submittal date, and sign each copy. Shop drawings which are received and are not endorsed, dated and signed will be returned for re-submittal.

.11 The Consultant will stamp shop drawings as follows:

.1 Reviewed ( )

.2 Reviewed as Modified ( )

.3 Revise and Re-Submit ( )

.4 Not Reviewed ( )

.12 If "REVIEWED" is checked-off, the shop drawing is satisfactory. If "REVIEWED AS MODIFIED" is checked-off, the shop drawing is satisfactory subject to requirements of remarks put on shop drawing copies. If "REVISE AND RE-SUBMIT" is checked-off, the shop drawing is entirely unsatisfactory and must be revised in accordance with comments written on shop drawing copies and resubmitted. If "NOT REVIEWED" is checked-off, the shop drawing is in error of submission, not applicable for this project.

.13 This review by the Consultant is for the sole purpose of ascertaining conformance with the general design concept. This review shall not mean that the Consultant approved the detail design inherent in the shop drawings, responsibility for which shall remain with the Contractor, and such review shall not relieve the Contractor of responsibility for errors or omissions in the shop drawings or of responsibility for meeting all requirements of the contract documents. Be responsible for dimensions to be confirmed and correlated at the job site, for information that pertains solely to fabrication processes or to techniques of construction and installation, and for co-ordination of the work as well as compliance with codes and inspection authorities such as CSA, etc.

1.12 SAFETY REQUIREMENTS

.1 Be responsible for the safety of workers and the equipment on the project in accordance with all applicable safety legislation passed by Federal, Provincial, and local authorities governing construction safety. The more stringent regulations prevail.

.2 Comply with requirements of Workplace Hazardous Materials Information System (WHMIS) regarding use, handling, storage, and disposal of hazardous materials. Submit WHMIS MSDS (Material Safety Data Sheets) for products where required, and maintain one copy at site in a visible and accessible location available to personnel.

.3 Comply with requirements of Occupational Health and Safety Act and other regulations pertaining to health and safety, including worker's compensation/ insurance board and fall protection regulations.

When working in confined spaces, comply with requirements of Occupational Health and Safety Act - Ontario Regulation 632, “Confined Spaces”.

.4 If at any time during course of existing building work, hazardous materials other than those identified in Documents and pertaining to Project Scope of Work, are encountered or suspected that were not identified as being present and which specific instructions in handling of such materials were not given, cease work in area in question and immediately notify Consultant. Comply with local governing regulations with regards to working in areas suspected of containing hazardous materials. Do not resume work in affected area without approval from Consultant.

1.13 REGULATORY REQUIREMENTS

.1 Codes and Standards

.1 Where any code, regulation, bylaw, standard, contract form, manual, printed instruction, and installation and application instruction is quoted it means, unless otherwise specifically noted, latest published edition at time of submission of Bids adopted by and enforced by local governing authorities having jurisdiction. Include for compliance with revisions, bulletins, supplementary standards or amendments issued by local governing authorities.

.2 Where regulatory codes, standards and regulations are at variance with Drawings and Specification, more stringent requirement will apply unless otherwise directed by Consultant.

.3 Supplementary mandatory Specifications and requirements to be used in conjunction with project include but are not limited to following:

.1 American Society of Heating, Refrigerating and Air Conditioning Engineers, Inc., (ASHRAE);
.2 American Standards Association (ASA or ANSI);
.3 ANSI/ASHRAE Standard 90.1, Energy Standard for Buildings Except Low-Rise Residential Buildings;
.4 Building Industry Consulting Services, International (BICSI);
.5 Canadian Standards Association (CSA);
.6 CSA Z317.5, Illumination Systems in Health Care Facilities.
.7 CSA Z32, "Electrical Safety and Essential Systems in Health Care Facilities";
.8 CSA Z432 Safeguarding of Machinery;
.9 CSA Z462, “Workplace Electrical Safety”;
.10 CAN/CSA Z8000, Canadian Health Care Facilities.
.11 CSA Z8001, “Commissioning of Health Care Facilities”;
.12 Electrical and Electronic Manufacturers Association of Canada (EEMAC);
.13 Electrical Safety Authority (ESA);
.14 Electronic Industries Association (EIA);
.15 Illuminating Engineering Society (IES);
.16 Institute of Electrical and Electronic Engineers (IEEE);
.17 National Building Code of Canada (NBC);
.18 National Electrical Manufacturers Association (NEMA);
.19 National Fire Protection Association (NFPA);
.20 Occupational Health and Safety Act - Ontario Regulation 632, “ Confined Spaces”;
.21 Occupational Health and Safety Act (OHSA);
.22 Ontario Building Code (OBC);
.23 Ontario Electrical Safety Code (OESC);
.24 Technical Standards and Safety Authority (TSSA);
.25 Telecommunications Industry Association (TIA);
.26 Underwriters’ Laboratories of Canada (ULC);
.27 additional codes and standards listed in Trade Sections;
.28 Codes, standards, and regulations of local governing authorities having jurisdiction;
.29 Hydro inspection permits;
.30 Material Safety Data Sheets by product manufacturers.

.31 National Association of Pharmacy Regulatory Authorities (NAPRA), Practice and Regulatory Standards.

.4 In addition, obtain, review and comply with requirements of latest version of issued Owner's Constructors Health & Safety Rules.

.5 Provide applicable requirements for barrier free access in accordance with latest edition of local governing building code.

.6 Where any governing Code, Regulation, or Standard requires preparation and submission of special details or drawings for review they are to be prepared and submitted. Pay associated costs associated with these submittals.

.7 Unless otherwise specified, equipment is to be installed in accordance with the equipment manufacturer's recommendations and instructions, and requirements of governing Codes, Standards, and Regulations. Governing Codes, Standards, and Regulations take precedence over manufacturer's instructions.

.8 Work is to be performed by journeyperson tradesmen who perform only the work that their certificates permit, or by apprentice tradesmen under direct on site supervision of an experienced journeyperson tradesman. Journeyperson to apprentice ratio is not to exceed ratio determined by the Board as stated in Ontario College of Trades and Apprenticeship Act.

.9 Journeyperson tradesmen are to have a copy of valid trade certificates available at site for review by Consultant at any time.

.10 Experienced and qualified superintendent is to be on-site at times when work is being performed.

.11 Coordinate work inspection reviews and approvals with governing inspection department to ensure that construction schedule is not delayed. Be responsible for prompt notification of deficiencies to Consultant and submission of reports and certificates to Consultant.

.12 Properly protect equipment and materials on site from damage due to elements and work of trades, to satisfaction of Consultant. Equipment and materials are to be in new condition upon Substantial Performance of the Work.

.2 Permits and Fees

.1 Obtain and pay for all permits and fees required for the execution and inspection of the electrical work and pay all charges incidental to such permits. Submit to Electrical Inspection Department and Supply authority necessary number of drawings and specifications for examination and approval prior to commencement of work. Arrange and pay for any special inspection of equipment specified if and when required.

.2 Apply, pay and obtain all permits as required for the electrical work.

.3 Submit required applications, shop drawings, electrical distribution system protection device coordination studies, and short circuit calculations, and any other information requested by local authority.

.4 Be responsible for ensuring that authorities having jurisdiction which require on-site inspection of work, have ample notification to perform inspection, with sufficient lead time to correct deficiencies in a manner that will not impede schedule of completion of Work.

.5 Upon substantial completion of your work, supply and turn over to the Consultant all required inspection certificates from governing authorities to certify that the work as installed conforms to the rules and regulations of the governing authorities.

.6 Where electromagnetic locks are provided whether by this Division or by others, be responsible for obtaining and paying for required certificates of work with regards to such electromagnetic lock work.

.3 Infection Prevention and Decontamination Requirements

.1 Comply with following CAN/CSA Standards:

.1 CAN/CSA-Z317.13, Infection Control During Construction, Renovation, and Maintenance of Health Care Facilities;

.2 CAN/CSA-Z317.10, Handling of Waste Materials in Healthcare Facilities.

.3 CAN/CSA-Z318.0, Commissioning of Healthcare Facilities.

.2 Prepare a list of all areas of the work where the infection control procedures are to be in force and review the list and procedures with the healthcare facility's infection control officer or a designated healthcare facility representative prior to any work in the areas commencing, and as work proceeds ensure that all infection control procedures are being maintained.

.3 Healthcare facility has policies and procedures that are to be reviewed and followed when working within areas of healthcare facility. Include for requirements specified in Division 01 and in this article.

.4 Comply with healthcare facility's latest policies and procedures regarding infection prevention measures during work of construction/renovation/installation/maintenance.

.5 Comply with healthcare facility's latest requirements regarding decontamination. Exact requirements and scope of this work are to be defined on drawings or in specifications where applicable and also may be defined in Division 01.

.4 Patient Care Areas

.1 Comply with requirements for patient care areas (PCA) included in Work as required by Section 24 of OESC. Patient care areas are identified on drawings or in schedule appended to end of this Section. Review final PCA nomenclature with Consultant prior to start of Work.

.2 Note that room and area names/numbers are based on information available at time of preparation of documents and such names/numbers may be revised in later documents or during construction of Work. In no way are patient care area classifications to be reduced due to name/number revisions. Confirm exact classifications as per local governing electrical code requirements to suit final construction and any design changes made by Consultant.

.3 Provide testing and verification of circuits and devices to confirm compliance with OESC.

.5 Patents

.1 Pay all royalties and licence fees, and defend all suits or claims for infringement of any patent rights, and save the Owner, Architect, Project Manager and Consultants harmless of loss or annoyance on account of suit, or claims of any kind for violation or infringement of any letters patent or patent rights, by this Subcontractor or anyone directly or indirectly employed by him or by reason of the use by him or them of any part, machine, manufacture or composition of matter on the work, in violation or infringement or such letters patent or rights.

1.14 REFERENCES

.1 Canadian Standards Association

.1 CSA-C22.1-12, Canadian Electrical Code, Part 1 (22nd Edition),

.2 Standard for Electrical Installations.

.3 CAN3-C235-83(R2006), Preferred Voltage Levels for AC Systems, 0 to 50 000 V.

.4 Do underground systems in accordance with CSA C22.3 No.7-06, Underground Systems, except where specified otherwise.

.5 Ontario Electrical Safety Code, 25th Edition / 2012.

.2 Electrical and Electronic Manufacturer's Association of Canada (EEMAC)

.1 EEMAC 2Y-1-1958, Light Gray Colour for Indoor Switch Gear.

.3 Health Canada / Workplace Hazardous

.4 Materials Information System (WHMIS)

.1 Material Safety Data Sheets (MSDS).

.5 Ontario Electrical Safety Code, 25th Edition / 2012, and all bulletins.

.6 Hydro requirements and local applicable codes and regulations.

.7 Institute of Electrical and Electronics (IEEE)/National Electrical Safety Code Product Line (NESC)

.1 IEEE SP1122-2000, The Authoritative Dictionary of IEEE Standards Terms, 7th Edition.

1.15 DEFINITIONS

.1 Electrical and electronic terms: unless otherwise specified or indicated, terms used in these specifications, and on drawings, are those defined by IEEE SP1122.

1.16 REQUIREMENTS FOR CONTRACTOR RETAINED ENGINEERS

.1 Professional engineers retained to perform consulting services with regard to Project work, i.e. seismic engineer, fire protection engineer, structural engineer, are to be members in good standing with local Association of Professional Engineers, and are to carry and pay for errors and omissions professional liability insurance in compliance with requirements of governing authorities in Place of the Work.

.2 Retained engineer’s professional liability insurance is to protect Contractor's Consultants and their respective servants, agents, and employees against any loss or damage resulting from professional services rendered by aforementioned Consultants and their respective servants, agents, and employees in regards to the Work of this Contract.

.3 Liability insurance requirements are as follows:

.1 coverage is to be a minimum of $1,000,000.00 CDN inclusive of any one occurrence;

.2 insurance policy is not to be cancelled or changed in any way without insurer giving Owner minimum thirty days written notice;

.3 liability insurance is to be obtained from an insurer registered and licensed to underwrite such insurance in the Place of the Work;

.4 Retained Consultants are to ascertain that Sub-Consultants employed by them carry insurance in the form and limits specified above;

.5 evidence of the required liability insurance in such form as may be required is to be issued to Owner, Owner’s Consultant, and Municipal Authorities as required prior to commencement of aforementioned Consultant’s services.

1.17 QUALITY ASSURANCE

.1 The specifications contained herein are set forth as the minimum acceptable requirements. This does not relieve the Contractor from executing other quality assurance measures to obtain a complete operating system within the scope of this project.

.2 Ensure that all workmanship, all materials employed, all required equipment and the manner and method of installation conforms to accepted construction and engineering practices, and that each piece of equipment is in satisfactory working condition to satisfactorily perform its functional operation.

.3 Provide quality assurance tests and operational check on all components of the electrical distribution system, all lighting fixtures, and communication systems.

.4 Only first class workmanship will be accepted, not only in regards to durability, efficiency and safety, but also in regards to neatness of detail. Present a neat and clean appearance on completion to the satisfaction of the Consultant. Any unsatisfactory workmanship will be replaced at no extra cost.

.5 Conform to the best practices applicable to this type of work. Install all equipment and systems in accordance with the manufacturer's recommendations, but consistent with the General Requirements of this specification. Electrical Contractor will be held responsible for all damage to the work of his own or any other trade, resulting from the execution of his work. Store all electrical equipment and materials in dry locations.

.6 Provide foreman in charge of this work at all times.

.7 The contractor shall be fully liable to provide and maintain in force during the life of this Contract, such insurance, including Public Liability Insurance, Product Liability Insurance, Auto Liability Insurance, Worker’s Compensation, and Employer’s Liability Insurance.

.8 Governing Federal, Provincial and Municipal codes and regulations will be considered minimum standards for the work and where these are at variance with the drawings and specification, the more stringent ruling will apply.

.9 Where any code, regulation, bylaw, or standard is quoted it shall mean the current edition including all revisions or amendments at the time of the tender.

.10 In case of conflict, the codes and regulations take precedence over the Contract Documents. In no instance reduce the standard or scope of work or intent established by the drawings and specifications by applying any of the codes referred to herein.

1.18 QUALITY CONTROL

.1 Refer to Division 00 documents, and Division 01 specification sections

.2 Provide a full time Superintendent to oversee and coordinate all sub-trades in these divisions.

1.19 TEMPORARY UTILITIES

.1 Do not use any of the permanent facility systems during construction except as may be specified, or unless written approval is obtained from the Consultant.

.2 The use of permanent facilities for temporary construction service will not affect in any way the commencement day of the warranty period.

.3 Temporary heating during the construction period will be provided as described in Division 01.

1.20 TEMPORARY FACILITIES AND CONTROLS

.1 Prior to start of each work period in occupied area, install temporary protection to prevent damage to any personal property or furnishing. Coordinate with Owner’s representative if any furniture must be relocated to facilitate work.

.2 Coordinate with General Contractor, requirements for temporary services including but not limited to temporary electrical power, lighting and exit pathways. Locations of exit pathways to be as decided at discretion of General Contractor, and to be illuminated complete with emergency lighting, and provided with exit signage and fire alarm devices in accordance with requirements of local governing building code and local governing inspection authorities.

.3 Take necessary steps to ensure that required firefighting apparatus is accessible at all times. Flammable materials shall be kept in suitable places outside the building.

.4 Maintain fire protection of areas which may include fire watch during temporary shutdowns of existing systems, in accordance with requirements of local governing code and local governing authorities.

.5 Submit temporary protection plan to Owner’s Representative for approval prior to use.

1.21 PRODUCT REQUIREMENTS

.1 The design, manufacture and testing of electrical equipment and materials shall conform to or exceed the latest applicable CSA, IEEE, and ANSI standards.

.2 All materials must be new and be ULC or CSA listed. Any materials not covered by the aforementioned listing standards shall be tested and approved by an independent testing laboratory, Technical inspection Services, or other government agency.

.3 Materials and equipment are specifically described and named in this Specification in order to establish a standard of material and workmanship.

.4 Materials required for performance of work shall be new and the best of their respective kinds and of uniform pattern throughout work.

.5 Materials shall be of Canadian manufacture where obtainable. Materials of foreign manufacture, unless specified, shall be approved before being used.

.6 Equipment items shall be standard products of approved manufacture. Identical units of equipment shall be of same manufacture. In any unit of equipment, identical component parts shall be of same manufacture, but the various component parts comprising the unit need not be of one manufacture.

.7 Chemical and physical properties of materials and design performance characteristics and methods of construction and installation of items of equipment, specified herein, shall be in accordance with latest issue of applicable Standards or Authorities when such are either mentioned herein, or have jurisdiction over such materials or items of equipment.

.8 Materials shall bear approval labels as required by Code and/or Inspection Authorities.

.9 Install materials in strict accordance with manufacturer's recommendations.

.10 Include items of material and equipment not specifically noted on Drawings or mentioned in Specification but which are necessary to make a complete and operating installation.

.11 Remove materials, condemned as not approved for use, from job site and deliver and install suitable approved materials in their place.

.12 Unless otherwise noted, equipment and material specifications in Sections of the Specification governed by this Section are based on products of a manufacturer selected by the Consultant for the purpose of setting a standard of quality, size, performance, capacity, appearance and serviceability.

.13 In most instances the names of acceptable manufacturers are also stated for materials and equipment, and you may base your tender price on equipment and materials produced by either the specified manufacturer or a manufacturer listed as acceptable.

.14 For any items of equipment, material, or for any system where acceptable manufacturers are not stated, you must provide only the equipment, material or system specified.

.15 If materials or equipment manufactured and/or supplied by a manufacturer named as acceptable are used in lieu of products of the manufacturer specified, be responsible for ensuring that the substituted material or equipment is equivalent in size, performance and operating characteristics to the specified materials or equipment, and it shall be understood that <u>all</u> costs for larger starters, additional space, larger power feeders, and changes to associated or adjacent work required as a result of providing materials and equipment named as acceptable in lieu of the specified product will be borne by Contractor.

.16 In addition to the manufacturers specified or named as acceptable, the Contractor may propose alternative manufacturers of equipment and/or apparatus to the Consultant for acceptance, listing in each case a corresponding credit for each alternative proposed, however, the tender price must be based on apparatus or materials specified or named as acceptable. Certify in writing to the Consultant that the alternative meets all space, power, design, and all other required of the specified or equivalent material or apparatus. In addition, it shall be understood that all costs for larger starters, space, power feeders, and changes to associated equipment, mechanical and/or electrical, required by acceptance of proposed alternatives, will be borne by the party making the

proposal. Alternative equipment requiring greater than specified energy requirements or unduly limiting service space requirements will not be accepted.

.17 Where a manufacturer is not listed for a particular product, it will be deemed to mean that the contractor will provide the specified manufacturer's product.

.18 Whenever use of product other than based specified products or named as acceptable is being supplied, time for process of submission of other products and Consultant's review of products will not alter contract time or delay work schedule.

.19 Requirements for low voltage systems of this project that are of technology that changes rapidly and are forever evolving and changing, resulting in systems that may be out dated by time of installation, are to include provisions to allow Owner option to select most updated technology. Shop drawings for such systems and equipment are to include provisions for a minimum 6-week review time for Owner to review degree of technology of each system and determine acceptance. Owner will have right to substitute a more advanced technology subject to negotiated pricing.

1.22 EXAMINATION AND PREPARATION

.1 Examine the existing equipment, the site and surrounding areas and be fully informed as to the conditions and limitations under which the work has to be executed. Claims for additional costs will not be entertained with respect to conditions which could reasonably have been ascertained by an inspection prior to Tender closing.

.2 Examine work upon which your work depends. Report in writing defects in such work. Application of your work shall be deemed acceptance of work upon which your work depends.

.3 Drawings are, in part, diagrammatic and are intended to convey scope of work and indicate general and approximate location, arrangement and sizes of equipment, piping, and similar items. Obtain more accurate information about locations, arrangement and sizes from study and coordination of drawings, including shop drawings and manufacturers' literature and become familiar with conditions and spaces affecting these matters before proceeding with work.

.4 Owner and Consultant reserve right to relocate electrical components such as receptacles, switches, communication system, outlets, hard wired outlet boxes and luminaries at a later date, but prior to installation, without additional cost to Owner, if relocation per components do not exceed 3 m (10') from original location. No credits will be anticipated where relocation per components of up to and including 3 m (10') reduces materials, products and labour. Should relocations exceed 3 m (10') from original location, adjust contract price for that portion beyond 3 m (10') in accordance with provisions for changes in Contract Documents.

1.23 CUTTING AND PATCHING

.1 The Electrical Contractor will be responsible for all cutting and patching required for the electrical installation. Structural members are not to be cut without the consent of the Consultant.

.2 All cutting and patching required under Division 26, Division 27, and Division 28 shall be in accordance with Division 01. Layout such work for approval before undertaking same.

.3 Cutting shall be kept to an absolute minimum and performed in a neat and workmanlike manner using the proper tools and equipment. Caution shall be exercised in all cutting and procedures to ensure that concealed services are not affected. Do not cut if in doubt. Request Consultant's presence to determine if concealed services exist.

.4 Assume responsibility for prompt installation of Work in advance of concrete pouring or similar Work. Should any cutting or repairing of finished/unfinished Work be required because such installation was not done, employ the particular trade, whose Work is involved, to do such cutting and patching. Pay for any resulting costs. Layout such Work for approval before undertaking same.

1.24 CLEANING AND WASTE MANAGEMENT

.1 The Contractor and associated sub trades, at all times during construction, to keep the site free of all debris, boxes, packing, etc., resulting from work of this trade. At the completion of this work, the electrical installation is to be left in a clean and finished condition to the satisfaction of the Consultant.

.2 Clean and repair existing materials and equipment which remain or are to be reused.

.3 Luminaires to be reinstalled: Remove existing luminaires for cleaning. Use mild detergent to clean all exterior and interior surfaces; rinse with clean water and wipe dry. Replace lamps, ballasts and broken electrical parts.

.4 Assume responsibility for removing tools and waste materials on completion of Work, and leave Work in clean and perfect condition.

.5 At time of final cleaning, clean luminaire reflectors, lenses, and other luminary surfaces that have been exposed to construction dust and dirt, including top surface, whether it is exposed or in ceiling space.

.6 Clean switches, receptacles, communications outlets, coverplates, and exposed surfaces.

.7 Clean other electrical equipment and devices installed as part of this project.

1.25 STARTING AND ADJUSTING

.1 Conduct acceptance tests to demonstrate that the equipment and systems actually meet the specified requirements. Tests may be conducted as soon as conditions permit, and consequently make all changes, adjustments, or replacements required as the preliminary tests may indicate prior to the final tests. Tests shall be as specified in various sections of this Division. Carry out tests in the presence of the Consultant. Provide instruments, meters, equipment and personnel required to conduct tests during and at conclusion of project. The Electrical Contractor shall be in charge of the plant during tests. He shall assume responsibility for damages in the event of injury to the personnel, building, equipment, and shall bear all costs for liability, repairs, and restoration in this connection. Submit test results.

.2 Make tests of equipment and wiring at times requested.

.3 Tests shall include meggered insulation values, voltage and current readings to determine balance of panels and feeders under full load, and operation of each piece of equipment for correct operation.

.4 Supply meters, materials and personnel as required to carry out these tests.

.5 Test electrical work to standards and function of Specification and applicable codes in an approved manner. Replace defective equipment and wiring with new material and leave entire system in complete first class operating condition.

.6 Connect single phase loads so that there is the least possible unbalance of the supply phases.

.7 Submit all test results in report format.

.8 Trial Usage

.1 The Consultant reserves the right to use any system, piece of equipment, device, or material for such reasonable lengths of time and at such times as may be required to make a complete and thorough test of the same, or for the purpose of learning operational procedures, before the final completion and acceptance of the work. Such tests shall not be construed as evidence of acceptance of the work, and it is agreed and understood that no claim for damage will be made for injury or breakage to any part or parts of the above due to the aforementioned tests, where such injuries or breakage are caused by a weakness or inaccuracy of parts, or by defective materials or workmanship of any kind. Supply all labour and equipment required for such tests.

.2 Perform and pay for all costs associated with any testing required on the system components where, in the opinion of the Consultant the equipment manufacturer's ratings or specified performance is not being achieved.

1.26 CLOSEOUT PROCEDURES

.1 The Consultant will carry out inspections and prepare deficiency list for action by the Contractor, during and on completion of project.

.2 Furnish a Certificate of Acceptance from Inspection Department on completion of work.

1.27 CLOSEOUT SUBMITTALS

.1 Prior to application for Substantial Performance of the Work, submit required items and documentation specified, including following:

.1 Operating and Maintenance Manuals;
.2 as-built record drawings and associated data;
.3 extended warranties for equipment as specified;
.4 operating test certificates;
.5 final commissioning report;
.6 identified keys for equipment and/or panels for which keys are required, and other items required to be submitted;
.7 other data or products specified.

.2 Project Record Documents

.1 Extra sets of white prints will be provided on which to make, as the job progresses, all approved changes and deviations from the original drawings. Complete Record Drawings accurately marked up in red ink must be submitted for approval before the contract is considered to be completed.

.2 Changes and deviations include those made by addenda, change orders, and supplemental instructions, and changes and deviations to be marked on the white print record drawings indicated on supplemental drawings issued with addenda, change orders, and supplemental instructions. Maintain the "as-built" white prints at the site for periodic inspection by the Consultant throughout the duration of the work.

.3 Upon substantial completion of the work, obtain a set of reproducible white prints of the drawings and neatly amend the print in accordance with the marked-up white prints to produce a true "as-built" set of drawings.

.4 As-built drawings are to indicate the following:

.1 all circuiting as installed and all distribution junction box locations as well as conduit routes.
.2 dimensioned location of inaccessible concealed work;
.3 location and identification of devices in concealed locations such as accessible ceiling spaces and raised floors;
.4 location of fire alarm devices and include addresses of devices; identify fire alarm zones;
.5 locations of control devices with identification for each;
.6 identify routing and location of concealed conduits/ducts of diameter 50 mm (2") and greater;
.7 for underground ducts, record dimensions, invert elevations, offsets, fittings, and locate dimensions from benchmarks to be preserved after construction is complete;
.8 location of concealed services terminated for future extension and work concealed within building in inaccessible locations.
.9 trace routing of existing panelboard feeders for all panelboards and indicate on as-built drawings.

.5 Supply electronic files of format confirmed with Owner for following:

.1 fire alarm system test report devices and addresses;

.2 network cabling system test report devices and labelling of each device and cable.

.6 Unless otherwise noted in Divisions 00 or 01, failure to maintain accurate record drawings will incur additional 5% holdback on progress claims until drawings are brought up to date to satisfaction of Consultant.

.7 As-Built AutoCAD Drawings

.1 Refer to Division 00 documents, and Division 01 specification sections.

.2 Transfer the information from the “as-built” white prints to the files, and submit to the Consultant for review.

.3 Employ a competent computer draftsperson to indicate changes on the electronic set of record drawings. Provide drawings in Adobe Acrobat 6.0, and AutoCAD release 2010.

.4 Submit three (3) CD’s of as-built drawings in AutoCAD format, one with each O&M manual.

.5 Provide three (3) sets of full size as-built drawings in hard copy format, one with each O&M manual.

.8 As-built Single Line Diagram:

.1 Provide in Main Electrical Room one wall mounted copy of as-built Single Line Diagram on 1/4 inch foam board.

.2 As-built Single Line Diagram to indicate manufacturer name and catalogue numbers of as-installed products.

.3 Operations and Maintenance (O&M) Data

.1 Submit two complete sets of Operation and Maintenance instruction manuals in hard copy, and one in electronic format. Include in each copy of the manual:

.1 Verification certificates for installation of life safety systems by the manufacturer’s representative.

.2 A copy of "reviewed" shop drawings.

.3 Complete explanation of operating principles and sequences.

.4 Recommended maintenance practices and precautions.

.5 Complete wiring and connection diagrams.

.6 Certificates of guarantees.

.7 Before applying for a Certificate of Substantial Performance of the Work, assemble one copy of O & M Manual and submit to Consultant for review prior to assembling remaining copies. Incorporate Consultant's comments into final submission.

.8 Provide 2 digital copies of contents of operating and maintenance manuals and load onto separate USB type flash drives and submit to Consultant. Prepare digital copies using version of Adobe Acrobat Portable Document Format or equal as confirmed with Consultant and enhanced with bookmarks and internal document links.

.2 Ensure that operating and maintenance instructions are specific and apply to the model and types of equipment provided.

.3 Include in each copy of operating and maintenance instruction manuals, copies of approvals and inspection certificates issued by regulatory authorities to certify that completed Work is in accordance with regulations of regulatory authorities and is acceptable to them.

.4 Warranties

.1 Submit a written guarantee to the Owner for one year from the date of acceptance. This guarantee shall bind the contractor to correct, replace or repair promptly any defective equipment workmanship without cost to the Owner.

.2 All equipment, materials and workmanship shall be unconditionally guaranteed for a minimum period of one year from the date of acceptance.

.3 Provide warranty certificates, wherever given or required, in excess of the normal warranty period showing the name of the firm giving the warranty, dated and acknowledged, on specific equipment and systems.

.4 Where equipment includes extended warranty period, e.g., five (5) years, first year of warranty period is to be governed by terms and conditions of warranty in Contract Documents, and remaining years of warranty are to be direct from equipment manufacturer and/or supplier to Owner.

.5 Warranty to include parts, labour, travel costs and living expenses incurred by manufacturer's authorized technician to provide factory authorized on-site service.

.6 Repair and/or replace any defects that appear in Work within warranty period without additional expense to Owner. Be responsible for costs incurred in making defective work good, including repair or replacement of building finishes, other materials, and damage to other equipment. Ordinary wear and tear and damage caused wilfully or due to carelessness of Owner's staff or agents is exempted.

.7 Include these certificates with the maintenance and operating manuals in the appropriate sections.

1.28 DEMONSTRATION AND TRAINING

.1 In the presence of the Owner, demonstrate the proper operation of all systems.

.2 Instruct the Owner's designated representatives in all aspects of the operation and maintenance of systems and equipment listed in the trade sections governed by this Section. Obtain in writing from the Consultant a list of the Owner's representatives qualified to receive instructions.

.3 Arrange for and pay for the services of qualified service technicians and other manufacturer's representatives required for instruction of specialized portions of the installation.

.4 Train Owner's designated personnel in aspects of operation and maintenance of equipment and systems as specified. Demonstrations and training are to be performed by qualified technicians employed by equipment/system manufacturer/supplier. Supply hard copies of training materials to each attendee.

.5 Unless where specified otherwise in trade Sections, minimum requirements are for manufacturer/suppliers of each system and major equipment, to provide minimum two separate sessions each consisting of minimum 4 hours on site or in factory training (at Owner's choice), of Owner's designated personnel (for up to 6 people each session), on operation and maintenance procedures of system.

.6 For each item of equipment and for each system for which training is specified, prepare training modules as specified below. Use Operating and Maintenance Manuals during training sessions. Training modules include but are not limited to:

.1 Operational Requirements and Criteria: equipment function, stopping and starting, safeties, operating standards, operating characteristics, performance curves, and limitations;
.2 Troubleshooting: diagnostic instructions, test and inspection procedures;
.3 Documentation: equipment/system warranties, and manufacturer's/supplier's parts and service facilities, telephone numbers, email addresses, and the like;
.4 Maintenance: inspection instructions, types of cleaning agents to be used as well as cleaning methods, preventive maintenance procedures, and use of any special tools;

.5 Repairs: diagnostic instructions, disassembly, component removal and repair instructions, instructions for identifying parts and components, and review of any spare parts inventory.

.7 Training Sessions:

.1 Before instructing Owner's designated personnel, submit to Consultant for review a preliminary copy of training manual and a proposed schedule of demonstration and training dates and times. Incorporate Consultant's comments in final copy.

.2 Obtain in writing from Consultant a list of Owner's representatives to receive instructions. Submit to Consultant prior to application for a Certificate of Substantial Performance of the Work, a complete list of systems for which instructions were given, stating for each system:

.1 date instructions were given to Owner's staff;
.2 duration of instruction;
.3 names of persons instructed;
.4 other parties present (manufacturer's representative, consultants, etc.).

.3 Obtain signatures of Owner's staff to verify they properly understood system installation, operation and maintenance requirements, and have received operating and maintenance instruction manuals and "as-built" record drawings.

.8 Submit to Consultant copy of electronic version of training materials. Include in operating and maintenance manuals submission.

1.29 FINAL INSPECTION

.1 Submit to Consultant, written request for final inspection of systems. Include written certification that:

.1 deficiencies noted during job inspections have been completed;
.2 field quality control procedures have been completed;
.3 maintenance and operating data have been completed and submitted to, reviewed and accepted by Consultant;
.4 nameplates are in place and equipment identifications have been completed;
.5 clean-up is complete;
.6 spare parts and replacement parts specified have been provided and acknowledged by Consultant;
.7 as-built and record drawings have been completed and submitted to, reviewed and accepted by Consultant;
.8 Owner's staff has been instructed in operation and maintenance of systems;
.9 fire alarm verification has been 100% completed and Verification Certificate has been submitted to and accepted by Consultant;
.10 commissioning procedures have been completed and perform corrective work identified by Commissioning Agent.

PART 2 - PRODUCTS – NOT USED

PART 3 - EXECUTION

3.1 DEMOLITION

.1 Refer to Division 02 and Section 26 05 05.

.2 Remove all electrical equipment and devices on redundant structures. Make safe all circuits, and provide continuity of remaining circuits.

.3 To make safe: Withdraw redundant wiring and remove unwanted conduit/wiring and accessories. Position breakers to OFF position and update panel schedules.

.4 Make safe any redundant mechanical devices as shown on mechanical drawings.

.5 Maintain continuity of existing services for other circuits/devices serving areas outside the Work area. Provide additional wiring/conduits/boxes etc. to suit existing services to be maintained and also implement new Work as detailed.

.6 Allow for this work in Tender Price.

.7 Turn over designated equipment to the Owner. Dispose of unwanted materials and equipment.

3.2 FIRESTOPPING

.1 Provide firestopping in accordance with Section 07 85 00.

.2 Ensure that fire ratings of floors and walls are maintained.

.3 Provide ULC classified firestopping products by 3M or Hilti which have been tested in accordance with CAN4-S115.

.4 Pack clearance spaces, fill all spaces between openings, pipes and ducts passing through fire separations and install firestopping systems in accordance with the appropriate ULC system number for the products and type of penetration.

.5 Install firestopping systems using personnel trained or instructed by the product manufacturer.

3.3 ACCESS DOORS

.1 Provide access doors in accordance with Section 10 08 00.

.2 Group conduit work to ensure the minimum number of access doors is required.

.3 Access doors are to be installed by the trade responsible for the particular type of construction in which the doors are required.

3.4 PAINTING AND FINISHES

.1 Refer to Section 09 91 00.

.2 Shop finish metal enclosure surfaces by application of rust resistant primer inside and outside, and at least two coats of finish enamel.

.3 Repair and finish factory finished equipment, damaged or scratched during installation, in an approved manner.

.4 All structural steel including hangers, brackets, supports and other ferrous metals shall be shop or factory prime painted wherever practicable. Wherever structural steel including hangers, brackets, supports, and other ferrous metals cannot be shop or factory prime painted, wire brush to remove all traces of rust, clean of all traces of dirt, oil, and grease, and apply one coat of an approved rust inhibiting primer in accordance with CGSB-GB-40d, and leave ready to receive finish paint.

.5 Primary and final painting for Work, other than items specified as factory primed or finished, will be performed as described in Division 09 – Finishes.

.6 All electrical fittings, supports, hanger rods, pull boxes, channel frames, conduit racks, outlet boxes, brackets, clamps etc., to have galvanized finish or paint finish over corrosion-resistant primer.

.7 All panelboards, motor starters etc., to be factory finished with baked on enamel. All enamel to be baked on gloss over corrosion resistant primer.

.8 Touch up minor damage to finish on factory finished equipment. Items suffering major damage to finish shall be replaced at the direction of the Consultant.

.9 Protect work so that finishes will not be damaged or marred during construction. Maintain the necessary protection until completion of the work.

.10 Provide all exposed ferrous metal work on equipment with at least one factory prime coat, or paint one prime coat on job. Clean up or wire brush all equipment, etc., before painting.

.11 For factory applied finishes, repaint or refinish surfaces damaged during shipment, erection or construction work.

3.5 LOCATION OF OUTLETS

.1 Refer to Architectural drawings for dimensions denoting exact locations.

.2 The Consultant reserves the right to change the location of outlets to within 3 m from the point indicated on the plans without extra charge providing the Contractor is advised before installation is made.

.3 Location of lighting, convenience, telephone, power and communication outlets shall be subject to change, without extra cost to Owners, provided information is given prior to installation. No extra amount will be paid for extra labour and materials for relocating outlets up to 3000 mm from their original location nor will credits be anticipated where relocation up to 3000 mm reduces materials and labour. Other cases will be considered on their individual merits.

.4 Coordinate location of boxes with latest architectural drawings and instructions to suit door swings, millwork etc. prior to rough-in.

3.6 MOUNTING HEIGHTS AND DEVICE LOCATIONS

.1 Refer to architectural drawings for exact location of electrical equipment and devices.

.2 Architectural elevations take precedence over electrical elevations. If there are conflicts between architectural and electrical, adjust locations of electrical equipment at no additional cost to the owner.

.3 Prior to roughing-in, the contractor is to mark locations of electrical equipment and devices for conflicts with architectural, studs, etc. If conflicts are noted, inform the consultant for a decision prior to commencing the rough-in.

.4 Mounting heights of equipment and devices listed below is from finished floor to centreline of equipment, unless specified or indicated otherwise.

.5 If mounting height of equipment is not specified or indicated, verify before proceeding with installation.

3.7 PROVISIONS FOR LEAD SHIELDING

.1 As part of scope of General Trades work, walls to be provided with lead shielding. Coordinate exact scope of work with General Trades Contractor and Consultant and be responsible for following:

.1 disconnection of electrical and communications system devices to accommodate lead shielding installation work;

.2 maintain integrity of lead shielding; do not penetrate lead shielding unless method of procedure is approved in writing by Owner and reviewed with Consultant;

.3 relocation/extension of back boxes and outlet boxes to accommodate work;

.4 provision of pull/junction boxes located in accessible ceiling space for existing conductors which are of insufficient length to suit device relocations; do not splice telecommunications cabling (structured data/voice cabling) if run is not sufficient length; replace with home run data/voice cabling; splicing of power conductors must be made by means recommended by cable manufacturers and reviewed with Consultant and approved by Owner; clearly identify each box to its purpose;

.5 existing wall mounted raceway to be relocated out from wall to accommodate installation of lead shielding; if necessary, provide additional raceways to match existing raceway;

.6 where existing devices are disconnected and that such devices are part of a telecommunication system or other such building system, engage respective system vendor's authorized technician to provide required system programming, control work, testing and verification to ensure devices are left in proper operating order.

3.8 TESTS AND ACCEPTANCE

.1 The operation of the equipment and electrical system does not constitute an acceptance of the work by the Owner. The final acceptance is to be made after the Contractor has adjusted his equipment and demonstrated that it fulfills the requirements of the drawings and the specifications.

.2 Testing of all systems shall be performed in the presence of the Owner's designated representative. The contractor shall give 10 days advance notice to the Owner before beginning the tests.

.3 Upon completion of the installation, the Contractor shall furnish certificates of approval from all authorities having jurisdiction, as applicable. Contractor shall demonstrate that work is complete and in perfect operating condition, with raceway and conduit systems properly grounded, wiring free from grounds, shorts, and that the entire installation is free for any physical defects.

END OF SECTION

PART 1 - GENERAL

1.1 SECTION INCLUDES

.1 Work in existing facilities.

.2 Electrical demolition.

1.2 RELATED REQUIREMENTS

.1 Section 02 – Demolition.

1.3 SCHEDULING

.1 Refer to Section 01.

.2 All work in the existing building, other than minor works required to permit construction of the new Work, is to be performed in such a manner as to not disrupt the building operations.

.3 All systems are to be kept in full operation during normal building hours.

.4 Coordinate any noise generating works that disrupt the building operation to be carried out after/before normal operating hours.

PART 2 - PRODUCTS

2.1 MATERIALS

.1 Materials and equipment for patching and extending work: As specified in individual sections.

PART 3 - EXECUTION

3.1 EXAMINATION

.1 Verification of Conditions

.1 Verify field measurements and circuiting arrangements are as shown on Drawings.

.2 Verify that abandoned wiring and equipment serve only abandoned facilities.

.3 Demolition drawings are based on casual field observation. Report discrepancies to the Consultant before disturbing existing installation.

.4 Beginning of demolition means installer accepts existing conditions.

.2 Tracing Existing Electrical Circuits

.1 Trace all circuits in the area of work listed as existing, and verify existing conditions prior to any modifications as indicated.

.2 Where drawings indicate “connect to existing circuit”, use a spare breaker, where available. Otherwise, verify existing load with a meter and advise the Consultant if the additional load will cause a circuit to trip.

.3 Where provided panelboard schedules indicate "Existing Circuit" or similar, provide the correct description for the circuit. Existing Circuit will not be acceptable in the final panelboard schedules submitted as part of closeout submittals.

3.2 PREPARATION

.1 Coordinate utility service outages with utility company.

.2 Provide temporary wiring and connections to maintain existing systems in service during construction. When work must be performed on energized equipment or circuits, use personnel experienced in such operations.

.3 Existing electrical service: Maintain existing system in service until new system is complete and ready for service. Disable system only to make switch overs and connections. Obtain permission from Owner at least 24 hours before partially or completely disabling system. Minimize outage duration. Make temporary connections to maintain service in areas adjacent to work area.

.4 Existing Telephone System: Maintain existing system in service. Notify Owner at least 24 hours before partially or completely disabling system. Minimize outage duration. Make temporary connections to maintain service in areas adjacent to work area.

.5 Existing Fire Alarm System: Maintain existing system in service. Minimize outage duration. Provide fire watch as required. Make temporary connections to maintain service in areas adjacent to work area.

3.3 DEMOLITION / REMOVAL

.1 Disconnect electrical systems in walls, floors, and ceilings scheduled for removal.

.2 Demolish and extend existing electrical work to Section 02 40 00, and this Section.

.3 Remove, relocate, and extend existing installations to accommodate new construction.

.4 Remove abandoned wiring to source of supply.

.5 When relocating or removing equipment, should any circuits be abandoned, the conductors to these circuits must be removed or properly terminated as detailed in Ontario Electrical Safety Code (OESC) bulletin 12-25-1, or latest revision.

.6 Remove exposed abandoned conduit, including abandoned conduit above accessible ceiling finishes. Cut conduit flush with walls and floors, and patch surfaces.

.7 Disconnect abandoned outlets and remove devices. Remove abandoned outlets if conduit servicing them is abandoned and removed. Provide blank cover for abandoned outlets which are not removed.

.8 Disconnect and remove abandoned panelboards and distribution equipment.

.9 Disconnect and remove electrical devices and equipment serving utilization equipment that has been removed.

.10 Disconnect and remove abandoned luminaires. Remove brackets, stems, hangers, and other accessories.

.11 Repair adjacent construction and finishes damaged during demolition and extension work.

.12 Extend existing installations using materials and methods compatible with existing electrical installations, or as specified.

.13 Maintain continuity of existing services for other circuits/devices serving areas outside the Work area. Provide additional wiring/conduits/boxes etc. to suit existing services to be maintained and also implement new Work as detailed.

3.4 RESTORATION

.1 Install relocated materials and equipment under the provisions of Division 01.

3.5 CLEANING

.1 Clean and repair existing materials and equipment which remain or are to be reused.

.2 Luminaires: Remove existing luminaires for cleaning. Use mild detergent to clean all exterior and interior surfaces; rinse with clean water and wipe dry. Replace lamps, ballasts, and broken electrical parts.

.3 Waste Management

.1 Turn over designated equipment to the Owner.

.2 Dispose of unwanted materials and equipment.

3.6 PROTECTION

.1 Maintain access to existing electrical installations which remain active. Modify installation or provide access panels as appropriate.

END OF SECTION

PART 1 - GENERAL

1.1 SECTION INCLUDES

.1 Building wire and cable.

.1 Armoured cable.

.2 Metal clad cable.

.3 Wiring connectors and connections.

.2 Permitted voltage drop for feeder and branch circuits.

1.2 REFERENCES

.1 CSA C22.1 - Canadian Electrical Code, Part I, Safety Standard for Electrical Installations

.2 Ontario Electrical Safety Code

.3 CSA C22.2 No. 0.3 - Test Methods for Electrical Wires and Cables.

.4 CSA C22.2 No. 48-M90 (R2000) - Non-metallic Sheathed Cable.

.5 CSA C22.2 No. 51 Armoured Cables.

.6 CSA C22.2 No. 52-96 (R2000) - Underground Service-Entrance Cables.

.7 CAN/CSA C22.2 No. 65-03 (CSA/UL/ANCE) – Wire Connectors.

.8 CSA C22.2 No. 75-03 (CSA/UL/ANCE) - Thermoplastic-Insulated Wires and Cables.

.9 CSA C22.2 No. 123 Aluminum Sheathed Cables.

.10 CSA C22.2 No. 131 Type TECK 90 Cable.

.11 NECA (National Electrical Contractors Association) - Standard of Installation.

.12 NETA (International Electrical Testing Association) - ATS-2003 - Acceptance Testing Specifications for Electrical Power Distribution Equipment and Systems.

.13 CAN/ULC-S139-12 – Standard Method of Fire Test for Evaluation of Integrity of Electrical Power, Data and Optical Fibre Cables.

1.3 SUBMITTALS

.1 Submit shop drawings for products of this Section as requested by Consultant.

.2 Additionally as part of shop drawing submission process, submit following to Consultant for review:

.1 samples of each typical wiring device, faceplates, finishes and colours; mount to sample board, clearly labelling devices and finishes; submit for review by Owner and Consultant; do not order any device unless finishes have been reviewed with Consultant;

.2 sample of each proposed type of access door, as well as three prints of reflected ceiling plan drawings showing proposed ceiling access door locations;

.3 dimensioned location drawings indicating required sleeves and formed openings in structural poured concrete or precast concrete construction or in roofing, and locations of cutting or drilling required for Electrical Divisions work;

.4 samples of materials and any other items as specified in succeeding Sections of Electrical Divisions;

.5 weight loads of selected equipment (upon request);

.6 equipment nameplate and warning sign proposed nomenclature, print type, symbols, sizing and colours;

.7 fire stopping installation drawings with ULC certifications;

.8 copies of prior to start of construction approvals from local governing authorities having jurisdiction.

1.4 PATIENT CARE AREAS

.1 Comply with requirements for patient care areas (PCA) included in Work as required by Section 24 of OESC. Patient care areas are identified on drawings. Review final PCA nomenclature with Consultant prior to start of Work.

.2 Note that room and area names/numbers are based on information available at time of preparation of documents and such names/numbers may be revised in later documents or during construction of Work. In no way are patient care area classifications to be reduced due to name/number revisions. Be responsible for confirming exact classifications as per local governing electrical code requirements to suit final construction and any design changes made by Consultant.

.3 Provide testing and verification of circuits and devices to confirm compliance with OESC.

1.5 COORDINATION

.1 Where wire and cable destination is indicated and routing is not shown, determine exact routing and lengths required.

1.6 QUALIFICATIONS

.1 Manufacturer: Company specializing in manufacturing products specified in this Section with minimum three years' experience.

1.7 REGULATORY REQUIREMENTS

.1 Conform to CSA C22.1.

.2 Provide products listed and classified by CSA (Canadian Standards Association) as suitable for the purpose specified and indicated.

1.8 SITE CONDITIONS

.1 Verify that field measurements are as indicated.

.2 Conductor sizes are based on copper unless indicated as aluminum or "AL".

.3 Wire and cable routing indicated is approximate unless dimensioned.

PART 2 - PRODUCTS

2.1 MANUFACTURERS

.1 BICC Phillips.

.2 General Cable.

.3 Nexans.

.4 Prysmian.

.5 Southwire.

2.2 BUILDING WIRE

.1 RW90:

.1 Single copper conductor.

.2 Minimum #12 AWG for branch circuit wiring.

.3 Minimum #14 AWG for 120V control wiring.

.4 Chemically cross-linked polyethylene insulation.

.5 Rated for 90 degrees C, 600V

.6 Suitable for handling to minus 40 degrees C.

.7 For interior installations in conduit.

.2 RWU90:

.1 Single copper conductor.

.2 Minimum 12 AWG for branch circuit wiring.

.3 Minimum 14 AWG for 120 V control wiring.

.4 Chemically cross-linked polyethylene insulation.

.5 Rated for 90 degrees C, 600 V

.6 Suitable for handling to minus 40 degrees C.

.7 For exterior installations in conduit.

.3 T90 Nylon:

.1 Single copper conductor.

.2 Thin wall PVC insulation with nylon covering.

.3 Rated for 90 degrees C, 600V.

.4 May be used up to size 10 AWG for interior installations.

.5 Base conduit fill on RW90 cable diameters.

.4 AC90 flexible armored:

.1 Two, three or four copper conductors rated RW90, 1000 V.

.2 Bare copper ground wire.

.3 Insulation Voltage Rating: 600 volts.

.4 Insulation Temperature Rating: 90 degrees C (194 degrees F).

.5 Insulation Material: Thermoplastic.

.6 Overall interlocked aluminum tape armour.

.7 Runs to be limited to fixture drops and in walls, maximum exposed run 1.5 m.

.8 Do not daisy chain (leap frog) luminaires with armoured cable.

.5 For all building wire types solid conductors to and including No. 10 AWG; stranded conductors in sizes larger than No. 10 AWG; branch circuit conductors constructed of 98% conductive copper; and approved for minimum 600 volts.

2.3 CONTROL AND COMMUNICATIONS CABLES

.1 ULC listed and labelled, CSA certified to C22.2 No. 127, No. 18 AWG "TEW" thermoplastic insulated, solid copper wire rated for 600 volts service, and 105°C (220°F) conductor temperature, complete with required number of copper conductors and colour coding.

.2 Nexans, "Securex II", FAS 105, 300 volts, 105°C (220°F) conductor temperature rated fire alarm system flexible armoured cable with solid copper conductor, shielding, flame retardant PVC insulation and red colour outer overall jacket, ULC listed and labelled and CSA certified to C22.2 No. 208.

2.4 CONDUCTOR PULLING LUBRICANT

.1 IDI Electric (Canada) Ltd., "Ideal Yellow 77" or "Wire Lube" as required.

2.5 CONNECTORS

.1 Armoured cable connectors must be proper squeeze type connectors and plastic anti-short bushings at terminations.

.2 Connectors for conductors connecting to devices as per local governing electrical requirements to be equal to IDI Electric (Canada) Ltd., "Ideal" No. 451, No. 452 and No. 453, "Wing-Nut", CSA certified, 600 volts, rated pressure type connectors.

.3 For conductors sized 3/0 and greater, provide long barrel double crimp, two (2) hole compression type lug connectors, unless otherwise noted.

2.6 WIRING TERMINATION

.1 Lugs, terminals, or screws used for termination of wiring to be suitable for copper conductors. Identify wiring with permanent indelible identifying markings, either numbered or coloured plastic tapes, on both ends of phase conductors of feeders and branch circuit wiring. Maintain phase sequence and colour coding throughout.

.2 Splice wire, up to and including No. 6 gauge, with nylon insulated expandable spring type connectors.

.1 Thomas & Betts – Marr Max Series

.3 Splice large conductors using compression type connections insulated with heat shrink sleeves.

.1 Thomas & Betts – 5400 Series lugs & heat shrink type #s series

2.7 CONDUCTORS, WIRES, AND CABLES

.1 Indoor wiring installed in conduit, unless otherwise noted: 600 volt "RW90 XLPE".

.2 Wiring in channel back of fluorescent lighting fixtures: 600 volt type GTF or TEW.

.3 Lighting and power branch circuit wiring:

.1 Copper, minimum No. 12 gauge.

.2 Home runs to lighting and receptacle panels, which exceed 22 m (75 feet) in length: minimum No. 10 gauge.

.4 Size wires for 2 per cent maximum voltage drop to farthest outlet on a maximum 80 per cent loaded circuit.

.5 Outdoor wiring: “RWU90 XLPE”.

.6 Conductors shall be colour coded. Conductors No. 10 gauge and smaller shall have colour impregnated into insulation at time of manufacture. Conductors size No. 8 gauge and larger may be colour coded with adhesive colour coding tape but only black insulated conductors shall be employed in this case, except for neutrals which shall be white wherever possible.

.7 Colour coding as follows:

.1 Phase "A" - Red

.2 Phase "B" - Black

.3 Phase "C" - Blue

.4 Control - Orange

.5 Ground - Green

.6 Neutral - White

.8 Neatly train circuit wiring in cabinets, panels, pull boxes and junction boxes and hold with nylon cable ties.

PART 3 - EXECUTION

3.1 EXAMINATION

.1 Voltage Drop

.1 Ensure voltage drop in power and control conductors is in accordance with the requirements of the Electrical Code.

.2 Size conductors accordingly when sizes are not identified.

.1 Feeder conductors: maximum voltage drop of 2 per cent.

.2 Branch circuit conductors: maximum voltage drop of 3 per cent.

.2 Verify that mechanical work likely to damage wire and cable has been completed.

.3 Verify that raceway installation is complete and supported.

3.2 PREPARATION

.1 Completely and thoroughly swab raceway before installing wire.

3.3 INSTALLATION

.1 Route wire and cable as required to meet project conditions.

.2 Install cable to CSA C22.1.

.3 Conduit and cable supports

.1 All wiring to be installed in EMT at all exposed areas and in partitions unless otherwise specified.

.2 All mechanical equipment to be connected with liquid tight flexible conduit.

.3 Support cables above accessible ceiling, using spring metal clips to support cables from structure. Do not rest cable on ceiling panels.

.4 Conductors

.1 Provide separate neutral for each circuit. Common neutrals not permitted.

.2 Use solid conductor for feeders and branch circuits 10 AWG and smaller.

.3 Use stranded conductors for control circuits.

.4 Use conductor not smaller than 12 AWG for power and lighting circuits.

.5 Use conductor not smaller than 16 AWG for control circuits.

.6 Armoured cable (commonly referred to as BX) is only to be used for light fixture connections and limited to maximum 1830 mm in length.

.7 Use 10 AWG conductors for 20 ampere, 120 volt branch circuits longer than 25 m.

.5 Pulling conductors

.1 Pull all conductors into raceway at same time.

.2 Use suitable wire pulling lubricant for building wire 4 AWG and larger.

.3 Neatly train and lace wiring inside boxes, equipment, and panelboards.

.4 Protect exposed cable from damage.

.6 Connectors

.1 Use suitable cable fittings and connectors.

.2 Clean conductor surfaces before installing lugs and connectors.

.3 Make splices, taps, and terminations to carry full ampacity of conductors with no perceptible temperature rise.

.4 Use split bolt connectors for copper conductor splices and taps 6 AWG and larger. Tape uninsulated conductors and connector with electrical tape to 150 per cent of insulation rating of conductor.

.5 Use solderless pressure connectors with insulating covers for copper conductor splices and taps, 8 AWG and smaller.

.6 Use insulated spring wire connectors with plastic caps for copper conductor splices and taps, 10 AWG and smaller.

3.4 IDENTIFICATION

.1 Identify and colour code wire and cable to Section 26 05 53. Identify each conductor with its circuit number or other designation indicated.

.2 Where colour-coded tape is utilized, apply a minimum of 50 mm (2 inches) at terminations, junction and pull boxes and conduit fittings. Do not paint conductors under any condition.

.3 Utilize colour coding on bussing in panels and, switchgear, disconnects, and metering cabinets to match conductor colour coding.

END OF SECTION

PART 1 - GENERAL

1.1 SECTION INCLUDES

.1 Grounding electrodes and conductors.

.2 Equipment grounding conductors.

.3 Bonding.

.4 The terms “connect” and “bond” are used interchangeably in this Specification and have the same meaning.

1.2 RELATED REQUIREMENTS

.1 [Section 09 65 36.13 – Static-Dissipative Resilient Flooring: Grounding of static dissipative tile (SDT).]

.2 [Section 09 69 00 – Access Flooring: Grounding of raised floor pedestals.]

.3 Section 27 05 26 – Grounding and Bonding for Communications Systems.

1.3 REFERENCES

.1 CSA Group:

.1 CSA C22.1:21, Canadian Electrical Code, Part 1 (25th Edition), Safety Standard for Electrical Installations.

.2 Ontario Electrical Safety Code (28th edition/2021).

.3 CSA C22.2 No.0.4-17, Bonding of electrical equipment.

.4 CSA C22.2 No. 41-13, Grounding and bonding equipment.

.5 CSA C22.2 No. 75-17, Thermoplastic insulated wires and cables.

.2 ANSI/TIA/EIA J-STD-607-A - Commercial Building Grounding (Earthing) and Bonding Requirements for Telecommunications.

.3 Institute of Electrical and Electronics Engineers, Inc.

.1 IEEE 81-1983 - IEEE Guide for Measuring Earth Resistivity, Ground Impedance, and Earth Surface Potentials of a Ground System.

1.4 ACTION SUBMITTALS

.1 Product Data: Provide for grounding electrodes and connections.

1.5 INFORMATIONAL SUBMITTALS

.1 Test Reports: Indicate overall resistance to ground and resistance of each electrode.

.2 Manufacturer's Instructions: Indicate application conditions and limitations of use stipulated by product testing agency specified under Regulatory Requirements. Include instructions for storage, handling, protection, examination, preparation, and installation of product.

1.6 CLOSEOUT SUBMITTALS

.1 Project Record Documents: Record actual locations of components and grounding electrodes.

.2 Certificate of Compliance: Indicate approval of installation by authority having jurisdiction.

1.7 QUALIFICATIONS

.1 Manufacturer: Company specializing in manufacturing the products specified in this section with minimum three years' experience.

1.8 REGULATORY REQUIREMENTS

.1 Products: Listed and classified testing firm acceptable to the authority having jurisdiction as suitable for the purpose specified and indicated.

PART 2 - PRODUCTS

2.1 MANUFACTURERS

.1 B-Line by Eaton.

.2 Hubbell (Burndy).

.3 Panduit.

.4 Thomas & Betts.

2.2 PERFORMANCE CRITERIA

.1 Grounding System Resistance: 5 ohms.

.2 Provide all equipment grounding as required regardless of whether it has been shown on drawings or called for in this specification. Arrange grounds so that under normal operating conditions no injurious amount of current will flow in any grounding conductor.

2.3 GROUNDING AND BONDING CONDUCTORS

.1 Electrical grounding conductors shall be CSA C22.2 No. 75 insulated stranded copper, except that sizes #10 AWG and smaller shall be solid copper. Insulation colour shall be continuous green for all equipment grounding conductors.

.2 Bonding conductors shall be ASTM B8 bare stranded copper, except that sizes #10 AWG and smaller shall be ASTM B1 solid bare copper wire.

2.4 ROD ELECTRODES

.1 Material: Copper-clad steel.

.2 Diameter: 19 mm.

.3 Length: 3000 mm.

2.5 GROUND RODS

.1 Copper clad steel, 19 mm (3/4 inch) diameter by 3000 mm (10 feet) long, conforming to CSA C22.2 No. 41.

.2 Quantity of rods shall be as required to obtain the specified ground resistance.

2.6 SPLICES AND TERMINATION COMPONENTS

.1 Components shall meet or exceed CSA C22.2 No. 41, and be clearly marked with the manufacturer, catalog number, and permitted conductor size(s).

2.7 GROUND CONNECTIONS

.1 Below Grade: Exothermic-welded type connectors.

.2 Above Grade:

.1 Bonding Jumpers: compression type connectors, using zinc-plated fasteners and external tooth lockwashers.

.2 Ground Busbars: Two-hole compression type lugs using tin-plated copper or copper alloy bolts and nuts.

2.8 GROUND TERMINAL BLOCKS

.1 At any equipment mounting location (e.g. backboards and hinged cover enclosures) where rack-type ground bars cannot be mounted, provide screw lug-type terminal blocks.

2.9 SPLICE CASE GROUND ACCESSORIES

.1 Splice case grounding and bonding accessories shall be supplied by the splice case manufacturer when available. Otherwise, use 6 AWG insulated ground wire with shield bonding connectors.

2.10 MECHANICAL CONNECTORS

.1 Material: Bronze.

2.11 WIRE

.1 Material: Stranded copper.

.2 Foundation Electrodes: 2/0 AWG.

.3 Grounding Electrode Conductor: Size to meet Ontario Electrical Safety Code requirements.

2.12 GROUNDING WELL COMPONENTS

.1 Well Pipe: 200 mm by 600 mm long concrete pipe with belled end.

.2 Well Cover: Cast iron with legend "GROUND" embossed on cover.

PART 3 - EXECUTION

3.1 EXAMINATION

.1 Verify that final backfill and compaction has been completed before driving rod electrodes.

3.2 INSTALLATION

.1 General

.1 Ground in accordance with the Ontario Electrical Safety Code, as shown on drawings, and as hereinafter specified.

.2 System Grounding:

.1 Secondary service neutrals: Ground at the supply side of the secondary disconnecting means and at the related transformers.

.2 Separately derived systems (transformers downstream from the service entrance): Ground the secondary neutral.

.3 Equipment Grounding: Metallic structures (including ductwork and building steel), enclosures, raceways, junction boxes, outlet boxes, cabinets, machine frames, and other conductive items in close proximity with electrical circuits shall be bonded and grounded.

.4 Ground electrical equipment and wiring in accordance with Ontario Electrical Safety Code and Local Inspection Authority's Rules and Regulations.

.5 Install grounding conductors, outside Electric Rooms and Electrical Closets in conduit and conceal where possible. Make connections to water mains, all metallic piping systems, neutral and equipment with brass, copper or bronze bolts and connectors or weld using Cadweld or Thermoweld processes.

.6 Provide grounding conductors, sized as per Code, and connect to grounding bus or water main wherever non-raceways are installed.

.2 Provide grounding electrode conductor and connect to reinforcing steel in foundation footing. Bond steel together.

.3 Provide bonding to meet Regulatory Requirements.

.4 Bond together metal siding not attached to grounded structure; bond to ground.

.5 Install ground grid under access floors indicated.

.6 Bond together each metallic raceway, pipe, duct and other metal object entering space under access floors. Bond to underfloor ground grid. Use #6 AWG bare copper conductor.

.7 Equipment Grounding Conductor: Provide separate, insulated conductor within each feeder and branch circuit raceway. Terminate each end on suitable lug, bus, or bushing.

.8 Ground Resistance

.1 Grounding system resistance to ground not to exceed 5 ohms. Make necessary modifications or additions to the grounding electrode system for compliance without additional cost to the Owner. Final tests shall assure that this requirement is met.

.2 Resistance of the grounding electrode system shall be measured using a four-terminal fall-of-potential method as defined in IEEE 81. Ground resistance measurements shall be made before the electrical distribution system is energized and shall be made in normally dry conditions not less than 48 hours after the last rainfall. Resistance measurements of separate grounding electrode systems shall be made before the systems are bonded together below grade. The combined resistance of separate systems may be used to meet the required resistance, but the specified number of electrodes must still be provided.

.3 Services at power company interface points shall comply with the power company ground resistance requirements.

.9 Ground Rod Installation

.1 Drive each rod vertically in the earth, not less than 3000 mm (10 feet) in depth.

.2 Where permanently concealed ground connections are required, make the connections by the exothermic process to form solid metal joints. Make accessible ground connections with mechanical pressure type ground connectors.

.3 Where rock prevents the driving of vertical ground rods, install angled ground rods or grounding electrodes in horizontal trenches to achieve the specified resistance.

.10 Inaccessible Grounding Connections

.1 Make grounding connections, which are buried or otherwise normally inaccessible (except connections for which periodic testing access is required) by exothermic weld.

.11 Secondary Equipment and Circuits

.1 Main Bonding Jumper: Bond the secondary service neutral to the ground bus in the service equipment.

.2 Metallic Piping, Building Steel, and Supplemental Electrode(s):

.1 Provide a grounding electrode conductor sized per code between the service equipment ground bus and all metallic water and gas pipe systems, building steel, and supplemental or made electrodes. Jumper insulating joints in the metallic piping. All connections to electrodes shall be made with fittings that conform to CSA C22.2 No 41.

.2 Provide a supplemental ground electrode and bond to the grounding electrode system.

.3 Conduit Systems:

.1 Ground all metallic conduit systems. All metallic conduit systems shall contain an equipment grounding conductor.

.2 Non-metallic conduit systems shall contain an equipment grounding conductor, except that non-metallic feeder conduits which carry a grounded conductor from exterior transformers to interior or building-mounted service entrance equipment need not contain an equipment grounding conductor.

.3 Conduit containing only a grounding conductor, and which is provided for mechanical protection of the conductor, shall be bonded to that conductor at the entrance and exit from the conduit.

.4 Feeders and Branch Circuits: Install equipment grounding conductors with all feeders and power and lighting branch circuits.

.5 Boxes, Cabinets, Enclosures, and Panelboards:

.1 Bond the equipment grounding conductor to each pull box, junction box, outlet box, device box, cabinets, and other enclosures through which the conductor passes (except for special grounding systems for intensive care units and other critical units shown).

.2 Provide lugs in each box and enclosure for equipment grounding conductor termination.

.3 Provide ground bars in panelboards, bolted to the housing, with sufficient lugs to terminate the equipment grounding conductors.

.6 Receptacles shall not be grounded through their mounting screws. Ground with a jumper from the receptacle green ground terminal to the device box ground screw and the branch circuit equipment grounding conductor.

.7 Raised Floors: Provide bonding of all raised floor components.

.12 Corrosion Inhibitors

.1 When making ground and ground bonding connections, apply a corrosion inhibitor to all contact surfaces. Use corrosion inhibitor appropriate for protecting a connection between the metals used.

.13 Conductive Piping

.1 Bond all conductive piping systems, interior and exterior, to the building to the grounding electrode system. Bonding connections shall be made as close as practical to the equipment ground bus.

3.3 [GROUNDING AND BONDING IN HEALTHCARE FACILITIES]

.1 Provide required grounding and bonding work in accordance with the drawings and in accordance with requirements of governing authorities, including the OESC. Review grounding requirements of project areas with specific requirements of use of areas as outlined in Contract Documents. Review exact requirements with the Consultant prior to start of work.

.2 Review medical equipment grounding with equipment vendor and provide requirements to suit.

.3 Throughout the renovated areas, solidly ground and bond the system equipment and make all required grounding connections to all new electrical devices and apparatus. Ground conductors shall be insulated copper wire connected with approved fittings in accordance with the OESC.

.4 All ground connections in slab shall be made using OESC approved welded copper connections - Cadweld as supplied by Erico Products or approved equal.

.5 Service conductors exceeding 400 amperes shall be provided with minimum No. 3/0 AWG grounding conductors, unless otherwise noted.

.6 Do not use conduit systems as ground conductors in patient care areas or in areas as per local governing electrical code requirements.

.7 Ground and bond telecommunication components as required.

.8 Provide conductors as sized on drawings and in accordance with OESC requirements, but which shall be of size no smaller than the requirements specified herein this article or on drawings.

3.4 FIELD QUALITY CONTROL

.1 Perform inspections and tests listed in NETA ATS, Section 7.13.

END OF SECTION

PART 1 - GENERAL

1.1 SECTION INCLUDES

.1 Conduit and equipment supports.

.2 Anchors and fasteners.

1.2 REFERENCES

.1 CSA C22.1-18, Canadian Electrical Code, Part 1 (24th Edition), Safety Standard for Electrical Installations.

.2 Ontario Electrical Safety Code (27th edition/2018).

.3 CECA - Canadian Electrical Contractors Association.

1.3 CLOSEOUT SUBMITTALS

.1 Submit the following in the Operation and Maintenance Manual for products used over the course of the project:

.1 Product Data: Provide manufacturer's catalogue data for fastening systems.

.2 Manufacturer's Instructions: Indicate application conditions and limitations of use stipulated by product testing agency specified under Regulatory Requirements. Include instructions for storage, handling, protection, examination, preparation, installation, and starting of product.

1.4 REGULATORY REQUIREMENTS

.1 Provide products listed and classified by Canadian Standards as suitable for purpose specified and shown.

PART 2 - PRODUCTS

2.1 MANUFACTURERS

.1 B-line by Eaton.

.2 Burndy Canada Ltd. (Hubbell).

.3 Erico Caddy.

.4 E. Myatt & Co. Inc.

.5 Hilti Canada.

.6 Thomas & Betts.

.7 Unistrut.

.8 Approved equal.

2.2 GENERAL

.1 All supporting devices, strut channel, threaded rod, anchors, etc. to be used shall be of the “hot dipped” galvanized type. Electrogalvanized components will not be accepted.

.2 Materials and Finishes: Provide adequate corrosion resistance.

.3 Provide materials, sizes, and types of anchors, fasteners and supports to carry the loads of equipment and conduit. Consider weight of wire in conduit when selecting products.

.4 Anchors and Fasteners:

.1 Concrete Structural Elements: Use expansion anchor sand preset inserts.

.2 Steel Structural Elements: Use beam clamps and welded fasteners.

.3 Concrete Surfaces: Use self-drilling anchors and expansion anchors.

.4 Hollow Masonry, Plaster, and Gypsum Board Partitions: Use toggle bolts and hollow wall fasteners.

.5 Solid Masonry Walls: Use expansion anchors and preset inserts.

.6 Sheet Metal: Use sheet metal screws.

.7 Wood Elements: Use wood screws.

2.3 ANCHORS AND HANGERS

.1 Hangers for electrical conduit shall be galvanized after fabrication.

.2 Perforated strapping: not permitted.

2.4 INSERTS

.1 Use only factory-made threaded or toggle type.

.2 Where inserts cannot be placed, use factory-made expansion shields for light weights, where approved by the Consultant.

.3 Do not use powder-activated tools except with the written permission of the Consultant.

2.5 SLEEVES

.1 Through interior walls, use standard weight steel pipes, conduit, or 18 gauge galvanized steel. Cut flush with finished surfaces. Check room finish schedules.

.2 Through exterior walls above grade, floors, and roof use standard weight steel pipes, machine cut, flush with finished surface inside and to suit flashing outside.

.3 Through exterior walls below grade, water-proofed floors, and other water-proof walls, use heavy weight cast iron pipes, machine cut. Extend sleeves 100 mm (4 inches) above finished floors, and cut flush with underside of floor.

2.6 STEEL CHANNEL

.1 Description: Painted steel.

2.7 SUPPORTS

.1 Steel supports in wet or dry locations to be galvanized after fabrication.

.2 Where galvanized members are bolted together use cadmium plated bolts.

.3 For hanger rods use minimum 10 mm (3/8 inch) diameter steel threaded rod. Use clevis type attachment.

.4 Provide minimum 100 mm (4 inch) high concrete bases for all floor mounted equipment.

2.8 SUPPORTS AND BASES

.1 Submit proposed method of attachment of hangers and beam clamps, to cellular steel deck for approval before proceeding with Work.

.2 Supply and erect special structural Work required for the installation of electrical equipment. Provide anchor bolts and other fastenings unless noted otherwise. Mount equipment required to be

suspended above floor level, where details are not shown, on a frame or platform bracketed from the wall or suspended from the ceiling. Carry supports to either the ceiling or the floor, or both as required, at locations where, because wall thickness is inadequate, it is not permitted to use such brackets.

.3 Electrical panels, switches or other electrical equipment shall be complete with suitable bases or mounting brackets.

.4 Provide channel or other metal supports where necessary, to adequately support lighting fixtures. Do not use wood unless wood forms part of the building structure.

.5 Support hangers, in general, from inserts in concrete construction or from building structural steel beams, using beam clamps. Provide additional angle or channel steel members, required between beams for supporting conduits and cables.

.6 Provide any additional supports required from existing concrete construction for any piping or equipment, by drilling same and installing expansion bolt cinch anchors.

.7 Do not use explosive drive pins in any section of Work without obtaining prior approval.

2.9 THREADED ROD COVERS

.1 Protect cable from abrasion caused by contact with threaded rod.

.2 To meet UL 94V-0 specifications.

.3 Colour: Black.

.4 Example product: Panduit TRC18FR-X20Y.

PART 3 - EXECUTION

3.1 INSTALLATION

.1 Obtain permission from the Consultant before drilling or cutting structural members.

.2 Fabricate supports from structural steel or steel channel. Rigidly weld members or use hexagon head bolts to present neat appearance with adequate strength and rigidity. Use spring lock washers under all nuts.

.3 Install surface-mounted cabinets and panelboards with minimum of four anchors.

.4 In wet and damp locations use steel channel supports to stand cabinets and panelboards 25 mm (1 inch) off wall.

.5 Use sheet metal channel to bridge studs above and below cabinets and panelboards recessed in hollow partitions.

.6 [Where threaded rod is exposed in data centre, provide threaded rod cover.]

.7 Provide inserts, sleeves, equipment supports and hangers, sealing of sleeves and openings, as required for all electrical work. Ensure that the load onto structures does not exceed the maximum loading per square metre as shown on Structural Drawings or as directed by the Consultant.

.8 Provide insets, holes, anchor bolts and sleeves in time when walls, floors, and roof are erected.

.9 Place insets only in structural members and not in the finishing material.

.10 Secure all supports and hangers to the structure unless noted otherwise.

.11 Suspend hanger rods from approved concrete inserts and from beam clamps. Obtain Consultant's approval before welding to steel structural members.

.12 Secure supports to precast concrete members to inserts originally cast into the members or by rods passing between the members and connected to a steel plate bearing.

.13 Sealing of Sleeves and Openings to Maintain Fire Rating

.1 Use Dow-Corning #3-6548 'Silicone RTV' foam, Thomas & Betts "Flamesafe' firestopsystem, Electrovert 'Flameseal" firestop putty, or approved equal materials installed in accordance with the manufacturer's specifications and recommendations.

.2 Submit data sheets for review prior to installation.

.14 Supports

.1 All conduits, panels, etc. to be securely and adequately supported.

.2 Where more than three conduits run together, conduit racks to be used.

.3 Single runs of conduit to be supported by galvanized conduit straps or ring bolt type hangers. Tie wire or perforated metal strap hangers will NOT be accepted.

END OF SECTION

PART 1 - GENERAL

1.1 SECTION INCLUDES

.1 Metal conduit.

.2 Flexible metal conduit.

.3 Liquid tight flexible metal conduit.

.4 Electrical metallic tubing.

.5 Fittings and conduit bodies.

1.2 REFERENCES

.1 Canadian Standards Association

.1 CSA C22.1 – Canadian Electrical Code, Part I, Safety Standard for Electrical Installations.

.2 Ontario Electrical Safety Code.

.3 CAN/CSA-C22.2 No. 18 – Outlet Boxes, Conduit Boxes, Fittings and Associated Hardware.

.4 CSA C22.2 No. 45 – Rigid Metal Conduit.

.5 CSA C22.2 No. 45.1 – Rigid Metal Conduit - Steel.

.6 CSA C22.2 No. 56 – Flexible Metal Conduit and Liquid - Tight Flexible Metal Conduit.

.7 CSA C22.2 No. 83.1 – Electrical Metallic Tubing - Steel.

.8 CSA C22.2 No. 211.1 – Rigid Types EB1 and DB2/ES2 PVC Conduit.

.9 CSA C22.2 No.211.2 – Rigid PVC (Unplasticized) Conduit.

.10 CSA C22.2 No. 211.3 – Reinforced Thermosetting Resin Conduit (RTRC) on Fittings.

.11 CSA C22.2 No. 227.1 – Electrical Nonmetallic Tubing.

.12 CSA C22.2 No. 227.2.1 – Liquid-Tight Flexible Nonmetallic Conduit.

1.3 PROJECT RECORD DOCUMENTS

.1 Accurately record actual routing of conduits larger than 51 mm.

.2 Accurately record actual routing of all conduits installed below grade, regardless of size, including whether direct buried or installed in concrete duct bank.

1.4 REGULATORY REQUIREMENTS

.1 Provide products listed and classified by CSA (Canadian Standards Association) as suitable for purpose specified and shown.

1.5 DELIVERY, STORAGE, AND HANDLING

.1 Accept conduit on site. Inspect for damage.

.2 Protect conduit from corrosion and entrance of debris by storing above grade. Provide appropriate covering.

1.6 PROJECT CONDITIONS

.1 Verify that field measurements are as shown on drawings.

.2 Verify routing and termination locations of conduit prior to rough-in.

.3 Conduit routing is shown on drawings in approximate locations unless dimensioned. Route as required to complete wiring system.

PART 2 - PRODUCTS

2.1 MANUFACTURERS

.1 Where products are listed in this section based on a single manufacturer, the equivalent product from the following manufacturers is acceptable:

.1 Appleton.

.2 Columbia-MBF.

.3 Crouse-Hinds by Eaton.

.4 Hubbell.

.5 Thomas & Betts Ltd.

2.2 CONDUIT REQUIREMENTS

.1 Minimum size: 21 mm (3/4 inch) unless otherwise specified.

.2 Outdoor locations, above grade: use rigid steel.

.3 Wet and damp locations: use rigid and non-metallic tubing.

.4 Dry locations:

.1 Concealed: Use electrical metallic tubing

.2 Exposed: Use electrical metallic tubing.

2.3 METAL CONDUIT

.1 Rigid Steel Conduit: C22.2 No. 45.1.

.2 Rigid Aluminum Conduit: C22.2 No. 45.

.3 Intermediate Metal Conduit (IMC): Rigid steel.

.4 Fittings and Conduit Bodies: Material to match conduit.

2.4 FLEXIBLE METAL CONDUIT

.1 Description: Interlocked steel construction.

.2 Fittings: CSA C22.2 No. 56.

2.5 LIQUID TIGHT FLEXIBLE METAL CONDUIT

.1 Description: Interlocked steel aluminum construction with PVC jacket.

.2 Fittings: CSA C22.2 No. 56.

2.6 ELECTRICAL METALLIC TUBING (EMT)

.1 Description: CSA C22.2 No. 83.1; galvanized tubing.

.2 Fittings and Conduit Bodies: CSA C22.2 No. 83.1; steel type.

2.7 ELECTRICAL NONMETALLIC TUBING (ENT)

.1 Not permitted.

2.8 CONDUIT, FITTINGS, AND ACCESSORIES

.1 Conduit accessories, conduits and fittings conforming to CSA Standard C22.2 No. 18-1972.

.2 Rigid conduit bushings:

.1 Thomas & Betts Ltd. - Series 5031.

.3 EMT Connectors:

.1 Thomas & Betts Ltd. - Steel City TC 121E Series.

.4 Ground Bushings:

.1 Thomas & Betts – Blackjack or 1220 Series.

.5 Flexible conduit connectors:

.1 Thomas & Betts Ltd. - Series 3110.

.2 EMT couplings: steel concrete tight to match connectors.

.6 Terminate rigid conduit entering boxes or enclosures with nylon insulated steel threaded bushings.

.1 Thomas & Betts – 8125 Series.

.7 Terminate EMT entering boxes or enclosures with nylon insulated steel concrete tight connectors.

.8 Terminate flexible conduit entering boxes or enclosures with nylon insulated steel connectors.

.1 Thomas & Betts – 5332 Series.

PART 3 - EXECUTION

3.1 INSTALLATION

.1 Install conduit to CSA C22.1.

.2 Provide conduit for conductors except armoured cable and copper sheathed mineral insulated conductors, and except where duct or similar raceway materials are provided.

.3 Provide conduit as follows:

.1 for interior building surface mounted services greater than 600 V – rigid galvanized steel;

.2 for feeders exceeding 600 V for main distribution wiring in Electrical rooms, and for concealed conduit in exterior walls-rigid galvanized steel;

.3 for exposed conduit outside building, for semi-exterior areas such as loading areas – rigid galvanized steel (rigid PVC where permitted by local codes and approved by Consultant);

.4 for exposed conduit mounted at a height of less than 1200 mm (4') in electrical, mechanical or other service areas – rigid galvanized steel;

.5 for short branch circuit connectors to motorized equipment and distribution transformers (minimum length 450 mm (18"), maximum length 600 mm (24") with 180° loop where possible) – galvanized steel flexible liquid-tight conduit;

.6 at points, where conductors cross building expansion joints – galvanized steel flexible conduit with no less than 600 mm (24") of extra curve;

.7 for branch circuit conductors in poured concrete slab – rigid PVC;

.8 for interior conduit above 50 mm (2") diameter containing distribution conductors or communication systems conductors (fire alarm, telephone etc.) (except as noted above) – EMT with separate insulated ground conductor;

.9 for conductors except as noted above or elsewhere in this Specification –EMT.

.4 Provide manufactured expansion joints in rigid PVC plastic conduit at spacing as recommended by conduit manufacturer.

.5 Provide a separate ground conductor in plastic conduits.

.6 Unless otherwise noted, provide conduit fittings constructed of same materials as conduit and which are suitable in respects for application.

.7 Provide proper adaptors for joining conduits of different materials.

.8 Cut square and properly ream site cut conduit ends.

.9 Provide conduit as sized on drawings. Size conduit not sized on drawings in accordance with latest edition of local governing electrical code with consideration that sizes of branch circuit conductors indicated are minimum sizes and must be increased as required to suit length of run and voltage drop in accordance with voltage drop schedule found on drawings and as required by local governing electrical code. Where conductor sizes are increased to suit voltage drop requirements, increase scheduled or specified conduit size to suit. Unless otherwise noted on drawings or required by local governing electrical code or specified elsewhere, conduit to be of minimum size 13 mm (1/2") diameter. Structured network cabling system conduit to be of minimum 20 mm (3/4") diameter, unless otherwise noted.

.10 Site made bends for conduit to maintain full conduit diameter with no kinking, and conduit finishes are not flake or crack when conduit is bent.

.11 Plug ends of roughed-in conduits which are exposed during construction with approved plugs.

.12 Arrangement and supports

.1 Arrange supports to prevent misalignment during wiring installation.

.2 Arrange conduit to maintain headroom and present neat appearance.

.3 Support conduit using coated steel or malleable iron straps, lay-in adjustable hangers, clevis hangers, and split hangers.

.4 Group related conduits; support using conduit rack.

.5 Construct rack using steel channel; provide space on each for 25 per cent additional conduits.

.6 Fasten conduit supports to building structure and surfaces.

.7 Do not support conduit with wire or perforated pipe straps. Remove wire used for temporary supports

.8 Do not attach conduit to ceiling support wires.

.9 Route exposed conduit parallel and perpendicular to walls.

.10 Route conduit installed above accessible ceilings parallel and perpendicular to walls.

.11 Route conduit in and under slab from point-to-point.

.12 Avoid moisture traps; provide junction box with drain fitting at low points in conduit system.

.13 Provide suitable fittings to accommodate expansion and deflection where conduit crosses expansion joints to permit free movement without imposing additional stress or loading upon support system, and to prevent excessive movement at joints and connections, in accordance with drawing details.

.13 Clearances

.1 Maintain adequate clearance between conduit and piping.

.2 Maintain 300 mm (12 inch) clearance between conduit and surfaces with temperatures exceeding 40 degrees C.

.14 Conduit bends

.1 Install no more than equivalent of three 90 degree bends between boxes.

.1 Use conduit bodies to make sharp changes in direction, as around beams.

.2 Use hydraulic one-shot bender to fabricate bends in metal conduit larger than 50 mm size.

.15 Install wall entrance seals where conduits pass through exterior walls below grade.

.16 Provide expansion coupling in conduit runs at building expansion joints and in long runs subject to thermal expansion, all in accordance with manufacturer recommendations.

.17 Cut conduit square using saw or pipe cutter; de-burr cut ends.

.18 Bring conduit to shoulder of fittings; fasten securely.

.19 Use suitable caps to protect installed conduit against entrance of dirt and moisture.

.20 Use conduit hubs or sealing locknuts to fasten conduit and to cast boxes.

.21 Provide suitable pull string in each empty conduit except sleeves and nipples.

.22 Wiring Methods

.1 Install wiring in conduit unless otherwise specified.

.2 Install wiring and conduit work in a concealed manner. Surface conduit work is not permitted unless specifically noted.

.3 Use thin wall conduit, up to and including 53 mm (2 inch) conduit size, for branch circuit and feeder wiring in ceilings, furred spaces, and in hollow walls and partitions. Use rigid galvanized steel conduit for wiring in poured concrete, where exposed, and for conduit 65 mm or larger. Use rigid PVC conduit for wiring in slabs on grade and wiring below grade.

.4 Flexible conduit and armoured cable will be accepted for a maximum length of 1500 mm for final connection to lighting fixtures. Do not connect from fixture to fixture.

.5 Conduit manufacturer's touch-up enamel shall be used to repair all scratches and gouges on epoxy-coated conduit.

END OF SECTION

PART 1 - GENERAL

1.1 SECTION INCLUDES

.1 Wall and ceiling outlet boxes.

.2 Pull and junction boxes.

1.2 RELATED REQUIREMENTS

.1 Section 26 09 23 – Lighting Control Devices.

.2 Section 26 27 26 – Wiring Devices: Wall plates in finished areas, floor box service fittings, fire-rated poke-through fittings, and access floor boxes.

.3 Section 26 28 00 - Low Voltage Circuit Protective Devices

1.3 REFERENCES

.1 CSA C22.1 - Canadian Electrical Code, Part I, Safety Standard for Electrical Installations

.2 Ontario Electrical Safety Code.

.3 CAN/CSA-C22.2 No. 18 - Outlet Boxes, Conduit Boxes, Fittings and Associated Hardware.

.4 CSA C22.2 No. 18.1 (CSA/UL/ANCE) - Metallic Outlet Boxes.

.5 CSA C22.2 No. 40 - Cutout, Junction and Pull Boxes.

.6 CAN/CSA-C22.2 No. 85 - Rigid PVC Boxes and Fittings.

1.4 CLOSEOUT SUBMITTALS

.1 Record actual locations and mounting heights of outlet, pull, and junction boxes on project record documents.

1.5 REGULATORY REQUIREMENTS

.1 Provide products listed and classified by CSA (Canadian Standards Association) as suitable for the purpose specified and indicated.

PART 2 - PRODUCTS

2.1 OUTLET BOXES

.1 Sheet Metal Outlet Boxes: CSA C22.2 No. 18, galvanized steel.

.1 Luminaire and Equipment Supporting Boxes: Rated for weight of equipment supported; include 13 mm male fixture studs where required.

.2 Concrete Ceiling Boxes: Concrete type.

.2 Non-metallic Outlet Boxes: CSA C22.2 No. 18.

.3 Cast Boxes: CSA C22.2 No. 18, Type FD, aluminum. Provide gasketed cover by box manufacturer. Provide threaded hubs.

.4 Wall Plates for Finished Areas: As specified in Section 26 27 26.

.5 Each outlet box and back box to be suitable in respects for application and complete with suitable securing lugs, connectors suitable for connected conduit, knockouts and, where necessary, suitable plaster rings, concrete rings, covers, carpet flanges and any other required accessory.

2.2 PULL BOXES AND JUNCTION BOXES

.1 Sheet Metal Boxes: CSA C22.2 No. 18, galvanized steel.

.2 Hinged Enclosures: As specified in Section 26 27 16.

.3 Surface Mounted Cast Metal Box: CSA C22.2 No. 18, Type 4; flat-flanged, surface mounted junction box:

.1 Material: Cast aluminum.

.2 Cover: Provide with ground flange, neoprene gasket, and stainless steel cover screws.

2.3 OUTLET BOXES

.1 Conform to CSA C22.2 No. 18.

.2 Where 103 mm (4 inch) square outlet boxes are installed in exposed concrete or cinder block finished areas, blocks will be cut as described in Division 04 as instructed under this Section. Cut openings to provide a close fit to boxes and covers so that edges of openings are not visible after installation of plates. Use of mortar to patch up openings that are cut too large or to patch ragged edges is not permitted.

.3 Ceiling boxes: 103 mm (4 inch) octagon or square, complete with fittings, where required to support fixtures.

.4 Switch and receptacle boxes:

.1 103 mm (4 inch) square with plaster ring, where flush mounted in plaster walls.

.2 Iberville 1104 series box, or equal, where flush mounted in wood or drywall, with stud fasteners as required.

.3 Masonry boxes in masonry walls.

.5 Where boxes are surface mounted in unfinished areas they shall be FS conduits.

.6 Standard outlet boxes manufactured from code gauge galvanized steel.

.7 Provide a suitable outlet box for each light, switch, receptacle or other outlet, approved for the particular area it is to be installed.

.8 Support outlet boxes independently of conduit and cable.

.9 Locate outlet boxes, mounted in hung ceiling space, so they do not obstruct or interfere with the removal of lay-in ceiling tiles.

.10 Offset outlet boxes, shown back to back in partitions, horizontally a minimum 150 mm (6 inch) to minimize noise transmission between adjacent rooms.

.11 Use gang boxes at locations where more than one device, of the same system only, is to be mounted. Utilize separate boxes for each system.

.12 Use tile wall covers where 103 mm (4 inch) square outlet boxes are installed in exposed concrete or cinder block in finished areas.

.13 Provide flush mount boxes, panels, cabinets and electrical devices, which are installed in finished areas, with suitable flush trims and doors or covers, unless specifically noted otherwise.

.14 Provide pre-formed polyethylene vapour barriers for all boxes located in walls with internal vapour barriers.

PART 3 - EXECUTION

3.1 EXAMINATION

.1 Verify locations of floor boxes prior to rough-in.

3.2 INSTALLATION

.1 Install boxes to CSA C22.1.

.2 Install in locations as shown on drawings, and as required for splices, taps, wire pulling, equipment connections and compliance with regulatory requirements.

.3 Set wall mounted boxes at elevations to accommodate mounting heights indicated.

.4 Electrical boxes are shown on drawings in approximate locations unless dimensioned. Adjust box location up to 3 m (10 feet) if required to accommodate intended purpose.

.5 Orient boxes to accommodate wiring devices oriented as specified in Section 26 27 26.

.6 Maintain headroom and present neat mechanical appearance.

.7 Install pull boxes and junction boxes above accessible ceilings and in unfinished areas only.

.8 Inaccessible Ceiling Areas: Install outlet and junction boxes no more than 150 mm (6 inch) from ceiling access panel or from removable recessed luminaire.

.9 Install boxes to preserve fire resistance rating of partitions and other elements, using materials and methods.

.10 Coordinate mounting heights and locations of outlets mounted above counters, benches, and backsplashes.

.11 Locate outlet boxes to allow luminaires positioned as shown on reflected ceiling plan.

.12 Align adjacent wall mounted outlet boxes for switches, thermostats, and similar devices.

.13 Use flush mounting outlet box in finished areas.

.14 Locate flush mounting box in masonry wall to require cutting of masonry unit corner only. Coordinate masonry cutting to achieve neat opening.

.15 Do not install flush mounting box back-to-back in walls; provide minimum 150 mm separation. Provide minimum 600 mm separation in acoustic rated walls.

.16 Secure flush mounting box to interior wall and partition studs. Accurately position to allow for surface finish thickness.

.17 Use stamped steel bridges to fasten flush mounting outlet box between studs.

.18 Install flush mounting box without damaging wall insulation or reducing its effectiveness.

.19 Use adjustable steel channel fasteners for hung ceiling outlet box.

.20 Do not fasten boxes to ceiling support wires.

.21 Support boxes independently of conduit.

.22 Use gang box where more than one device is mounted together. Do not use sectional box.

.23 Use gang box with plaster ring for single device outlets.

.24 Use cast outlet box in exterior locations exposed to the weather.

.25 Use cast outlet box in wet locations.

.26 Set floor boxes level.

.27 Large pull boxes: Use hinged enclosure in interior dry locations, surface-mounted cast metal box in other locations.

3.3 ADJUSTING

.1 Adjust floor box flush with finish flooring material.

.2 Adjust flush-mounting outlets to make front flush with finished wall material.

.3 Install knockout closures in unused box openings.

3.4 CLEANING

.1 Clean interior of boxes to remove dust, debris, and other material.

.2 Clean exposed surfaces and restore finish.

END OF SECTION

PART 1 - GENERAL

1.1 SECTION INCLUDES

.1 Sleeves, sealing of sleeves and openings, as required for all electrical work.

1.2 SUBMITTALS

.1 Submit data sheets for firestopping in accordance with Section 01.

.2 Submit copies of firestopping drawings with ULC certificate and system number for each specific installation.

.3 Submit schedule of opening locations and sizes, penetrating items, and required listed design numbers to seal openings to maintain fire resistance ratings.

.4 Submit dimensioned location drawings indicating required sleeves and formed openings in structural poured concrete or precast concrete construction or in roofing, and locations of cutting or drilling required for Electrical work.

PART 2 - PRODUCTS

2.1 SLEEVES

.1 Galvanized steel sleeves:

.1 No. 24 gauge with an integral flange at one (1) end to secure sleeve to formwork construction.

.2 Schedule 40 pipe.

.2 Schedule 40 PVC sleeves.

2.2 SLEEVE SEALS

.1 Manufacturers

.1 Hilti Canada.

.2 Specified Technologies Inc.

.3 3M Canada Inc.

.4 Tremco.

.5 A/D Fire Protection Systems.

.6 Nelson.

.7 Approved equal.

.2 Asbestos-free, elastomeric materials and intumescent materials, tested, listed and labelled by ULC in accordance with CAN/ULC-S115, and CAN/ULC-S101 for installation in ULC designated firestopping, and smoke seal systems to provide a positive fire, water and smoke seal and a fire resistance rating (flame, hose stream and temperature) no less than fire rating for surrounding construction.

.3 Materials are to be compatible with abutting dissimilar materials and finishes and complete with primers, damming and back-up materials, supports, and anchoring devices in accordance with firestopping manufacturer's recommendations and ULC tested assembly. Coordinate material requirements with trades supplying abutting areas of materials.

.4 Maintain fire rating of separation in accordance with architectural drawings.

PART 3 - EXECUTION

3.1 INSTALLATION

.1 Where conduits and conductors pass through structural poured concrete, provide sleeves of type suitable for application, and approved by local governing codes.

.2 Sleeves in concrete slabs, except as noted below, are to be No. 24 gauge or equivalent, with an integral flange to secure sleeves for formwork construction.

.3 Sleeves in waterproof concrete slabs and in other slabs where waterproof sleeves are required are to be lengths of Schedule 40 pipe sized to extend 100 mm (4") above floor.

.4 Sleeves in poured concrete walls and foundation are to be Schedule 40 pipe.

.5 Through interior walls, use standard weight steel pipes, conduit, or galvanized steel. Cut flush with finished surfaces. Check room finish schedules.

.6 Through exterior walls above grade, floors, and roof use standard weight steel pipes, machine cut, flush with finished surface inside and to suit flashing outside.

.7 Through exterior walls below grade, water-proofed floors, and other water-proof walls, use heavy weight cast iron pipes, machine cut. Extend sleeves 100 mm (4") above finished floors, and cut flush with underside of floor.

.8 Size sleeves, unless otherwise noted, to leave 13 mm (1/2") clearance around conduit, duct, conductor, etc. Void between sleeves and conduit, duct, conductors, etc., to be packed and sealed for length of sleeves as in accordance with article entitled “Sleeve Seals” specified in this Section. Pack and seal sleeves set in exterior walls with governing authority approved materials suitable for application and pack both ends of sleeves watertight with approved permanently flexible and water tight materials. Coordinate exact responsibility of work with General Trades Contractor.

.9 Submit to concrete reinforcement detailer at proper time, drawings indicating required sleeves, recesses and formed openings in poured concrete work. Completely and accurately dimension such drawings and relate sleeves, recesses and formed openings to suitable grid lines and elevation datum.

.10 Supply sleeves of a water protecting type in accordance with detail found on drawings for installation in following locations:

.1 in Mechanical and Fan Room floor slabs, except where on grade;

.2 in slabs over Mechanical, Fan, Electrical and Telephone Equipment Rooms or closets;

.3 in floors equipped with waterproof membranes.

.11 "Gang" type sleeving to be permitted only with approval of Owner and reviewed with the Consultant.

.12 Terminate sleeves for work which is exposed, so that sleeve is flush at both ends with wall, partition, or slab surface such that sleeve may be covered completely by escutcheon plates.

.13 Sleeves are not required in interior walls and dry area floors where conduit is installed ahead of floor construction.

.14 Seal all openings and sleeves after installation of equipment:

.1 With an approved material to maintain fire rating where sleeves and openings pass through fire separations and floors.

.2 With an approved material to maintain fire rating for sleeves and openings provided for future equipment.

.1 Flash all conduits and systems passing through roof or built into an outside wall, or a waterproof floor.

.2 Provide copper flashing for sleeves passing through exterior walls or waterproof floors.

.15 Provide all flashing and waterproofing for sleeves through roof and exterior walls to the requirements of Division 07.

.16 Firestop sleeves in accordance with the manufacturer's specifications and recommendations.

END OF SECTION

PART 1 - GENERAL

1.1 SECTION INCLUDES

.1 Tested firestop systems used in penetrations for the passage of cables, conduit, and other electrical equipment through fire-rated vertical barriers (walls and partitions), horizontal barriers (floor/ceiling assemblies), and vertical service shaft walls and partitions.

1.2 RELATED REQUIREMENTS

.1 Coordinate work of this section with work of other sections as required to properly execute the work and as necessary to maintain satisfactory progress of the work of other sections, including:

.1 Section 07 – Firestopping.

.2 Section 27 05 44 – Sleeves and Sleeve Seals for Communications Pathways and Cabling.

1.3 REFERENCES

.1 Underwriter's Laboratories (UL) and Underwriters Laboratories of Canada (ULC):

.1 Test Requirements: CAN/ULC-S115:2018, Standard Method of Fire Tests of Firestop Systems.

.2 Underwriters Laboratories of Canada (ULC) runs CAN/ULC-S115:2018 under their designation of ULC-S115:2018 and publishes the results in their "FIRE RESISTANCE RATINGS DIRECTORY" that is updated annually.

.3 Underwriters Laboratories (UL) of Northbrook, IL runs ASTM E-814 under their designation of UL 1479 and publishes the results in their "FIRE RESISTANCE DIRECTORY" that is updated annually. UL tests that meet the requirements of ULC-S115-M are given a cUL listing and are published by UL in their "Products Certified for Canada (cUL) Directory.

.4 CAN/ULC-S102:2018, Standard Test Method for Surface Burning Characteristics of Building Materials and CAN/ULC-S101 Fire Endurance Tests of Building Construction and Materials.

.2 ASTM:

.1 Omega Point Laboratories runs ASTM E-814 and publishes the results annually in their "Omega Point Laboratories Directory".

.2 Inspection Requirements: ASTM E 2174, "Standard Practice for On-site Inspection of Installed Fire Stops.", and ASTM E2393 Standard Practice for On-Site Inspection of Installed Fire Resistive Joint Systems and Perimeter Fire Barriers.

.3 Test Requirements: ASTM E 2307, "Standard Test Method for Determining Fire Resistance of Perimeter Fire Barrier Systems Using Intermediate-Scale, Multi-story Test Apparatus".

.4 ASTM D6904, "Standard Practice for Resistance to Wind Driven Rain for Exterior Coatings Applied on Masonry".

.5 ASTM C 679, "Standard Test Method for Tack-Free Time of Elastomeric Sealants".

.3 International Firestop Council Guidelines for Evaluating Firestop Systems Engineering Judgments.

.4 Ontario Building Code.

.5 Ontario Electrical Safety Code.

1.4 DEFINITIONS

.1 Firestopping: Material or combination of materials used to retain integrity of fire-rated construction by maintaining an effective barrier against the spread of flame, smoke, and hot gases through penetrations in fire rated wall and floor assemblies.

1.5 SUBMITTALS

.1 Submit Product Data: Manufacturer's specifications and technical data for each material including the composition and limitations, documentation of ULC or cUL firestop systems to be used and manufacturer's installation instructions to comply with Section 01 33 00.

.2 Manufacturer's engineering judgment identification number and drawing details when no ULC or cUL system is available for an application. Engineered judgment must include both project name and contractor’s name who will install firestop system as described in drawing.

.3 Submit material safety data sheets provided with product delivered to job-site.

.4 Submit shop drawings in accordance with Section 01 33 00:

.1 Submit complete cUL, ULC, or equivalent approved systems for all applications. Ensure the listing is clearly noted on the submittal.

.5 [Submit certificate by firestopping manufacturer proving that the products supplied comply with LEED requirements for indoor environmental quality credit including printed statement of VOC.]

1.6 CLOSEOUT SUBMITTALS

.1 On completion of firestopping and smoke sealing installation, submit a Letter of Assurance to the Consultant certifying the firestopping and smoke sealing installation has been carried out throughout the building to electrical service penetrations and that installation has been done in strict accordance with requirements of the Ontario Building Code, any applicable municipal bylaws, ULC requirements, and manufacturer’s instructions.

1.7 QUALITY ASSURANCE

.1 Fire-Test-Response Characteristics: Provide through-penetration fire stop systems and fire-resistive joint systems that comply with specified requirements of tested systems.

.2 Firestop System installation must meet requirements of CAN/ULC-S115 tested assemblies that provide a fire rating as shown in Section 2.1 Clauses 4, 5, 6, and 7 below.

.3 Proposed firestop materials and methods shall conform to applicable governing codes having local jurisdiction.

.4 Firestop Systems do not re-establish the structural integrity of load bearing partitions/assemblies, or support live loads and traffic. Installer shall consult the structural engineer prior to penetrating any load bearing assembly.

.5 For those firestop applications that exist for which no ULC or cUL tested system is available through a manufacturer, a manufacturer's engineering judgment derived from similar ULC or cUL system designs or other tests will be submitted to local authorities having jurisdiction for their review and approval prior to installation. Engineering judgment drawings must follow requirements set forth by the International Firestop Council.

1.8 INSTALLER QUALIFICATIONS

.1 Engage an experienced Installer who is certified, licensed, or otherwise qualified by the firestopping manufacturer as having the necessary training to install manufacture’s products per specified requirements. A supplier’s willingness to sell its firestopping products to the Contractor or to an Installer engaged by the Contractor does not in itself confer qualification on the buyer.

.2 Installation Responsibility: assign installation of through-penetration fire stop systems and fire-resistive joint systems in Project to a single sole source firestop specialty contractor.

.3 The work is to be installed by a contractor with at least one of the following qualifications:

.1 FM 4991 approved contractor.

.2 UL approved contractor.

.3 Manufacturer's accredited fire stop specialty contractor.

.4 Installer: Minimum 3 years experience with fire stop installation.

1.9 DELIVERY, STORAGE, AND HANDLING

.1 Deliver materials undamaged in manufacturer's clearly labeled, unopened containers, identified with brand, type, and ULC or cUL label where applicable.

.2 Coordinate delivery of materials with scheduled installation date to allow minimum storage time at job-site.

.3 Store materials under cover and protect from weather and damage in compliance with manufacturer's requirements.

.4 Comply with recommended procedures, precautions or remedies described in material safety data sheets as applicable.

.5 Do not use damaged or expired materials.

1.10 PROJECT CONDITIONS

.1 Do not use materials that contain flammable solvents.

.2 Scheduling

.1 Schedule installation of CAST IN PLACE firestop devices after completion of floor formwork, metal form deck, or composite deck but before placement of concrete.

.2 Schedule installation of Drop-In firestop devices after placement of concrete but before installation of the pipe penetration. Diameter of sleeved or cored hole to match the listed system for the device.

.3 Schedule installation of other firestopping materials after completion of penetrating item installation but prior to covering or concealing of openings.

.3 Verify existing conditions and substrates before starting work. Correct unsatisfactory conditions before proceeding.

.4 Weather conditions: Do not proceed with installation of firestop materials when temperatures exceed the manufacturer's recommended limitations for installation printed on product label and product data sheet.

.5 During installation, provide masking and drop cloths to prevent firestopping materials from contaminating any adjacent surfaces.

PART 2 - PRODUCTS

2.1 PERFORMANCE REQUIREMENTS

.1 Provide firestopping composed of components that are compatible with each other, the substrates forming openings, and the items, if any, penetrating the firestopping under conditions of service and application, as demonstrated by the firestopping manufacturer based on testing and field experience.

.2 Provide components for each firestopping system that are needed to install fill material. Use only components specified by the firestopping manufacturer and approved by the qualified testing agency for the designated fire-resistance-rated systems.

.3 Provide a round fire-rated cable management device whenever cables penetrate fire rated walls, where frequent cable changes and additions may occur. The fire-rated cable management device shall consist of a corrugated steel tube with zinc coating, contain an inner plastic housing, intumescent material rings, and inner fabric smoke seal membrane. The length of the sleeve shall

be 315 mm (12.4 inches). The fire-rated cable management device shall contain integrated intumescent firestop wrap strip materials sufficient to maintain the hourly rating of the barrier being penetrated. The fire-rated cable management device shall contain a smoke seal fabric membrane or intumescent firestop plugs sufficient to achieve the L-Rating requirements of the barrier type. Install device per the manufacturer's published installation instructions.

.4 Penetrations in Horizontal Assemblies: Provide firestopping with ratings determined in accordance with CAN/ULC-S115. For penetrations through a Fire Wall or horizontal Fire Separation provide a firestop system with a "FT" Rating as determined by ULC or cUL which is equal to the fire resistance rating of the construction being penetrated.

.5 W-ratings: in accordance with Section 07 84 00.

.6 Provide a firestop system with an Assembly Rating as determined by CAN/ULC-S115 which is equal to the time rating of construction joint assembly.

.7 Penetrations in Smoke Barriers: Provide firestopping with ratings determined in accordance with CAN/ULC-S115.

.1 L-Rating: Not exceeding 5.0 CFM/sqft of penetration opening at both ambient and elevated temperatures.

.8 Mold Resistance: Provide penetration firestopping with mold and mildew resistance rating of [0] as determined by ASTM G21.

.9 Rain and water resistance: provide perimeter joint sealant tested in accordance with ASTM D 6904 with less than 1 hour tack free time as tested in accordance with ASTM C 679.

2.2 MANUFACTURERS

.1 Manufacturer List:

.1 AD Fire Protection Systems.

.2 Hilti (Canada) Corporation

.3 3M.

.4 Specified Technologies, Inc. (STI).

.5 Tremco, Inc.

.6 Approved equal.

.2 Substitutions: Where a specific manufacturer is noted in this Section, equivalent products from the manufacturers listed above may be used, subject to compliance with through penetration firestop systems and joint systems listed in the ULC Fire Resistance Directory – Volume III, or UL Products Certified for Canada (cUL) Directory.

2.3 MATERIALS

.1 Use only firestop products that have been ULC or cUL tested for specific fire-rated construction conditions conforming to construction assembly type, penetrating item type, annular space requirements, and fire-rating involved for each separate instance.

.2 Accessories: provide components for each firestopping and smoke seal systems that are needed to install fill materials. Use only components specified by firestopping material manufacturer, and approved by the qualified testing agency. Accessories include, but are not limited to, the following items:

.1 Permanent forming, damming and backing material.

.2 Temporary forming material.

.3 Pre-formed firestop devices for use with non-combustible and combustible pipes (closed and open systems), conduit and/or cable bundles penetrating concrete floors and/or gypsum walls:

.1 Hilti Tub Box Kit (CP 681) for use with tub installations.

.2 Hilti Cast-In Place Firestop Device (CP 680-PX) for use with XFR pipe.

.3 Hilti Cast-In Place Firestop Device (CP 680-M) for use with non-combustible penetrants.

.4 Hilti Speed Sleeve (CP 653) for use with cable penetrations.

.5 Hilti Firestop Drop-In Device (CFS-DID) for use with non-combustible and combustible penetrants.

.6 Hilti Cast-in Firestop sleeve (CFS-CID MD P) and (CFS-CID MD M) for use with combustible and non-combustible pipes through metal deck.

.7 Hilti Firestop Block (CFS-BL).

.8 STI SpecSeal series SSC Firestop Collars.

.9 STI SpecSeal series LCC Firestop Collars.

.4 Sealants or caulking materials for use with non-combustible items including steel pipe, copper pipe, rigid steel conduit and electrical metallic tubing (EMT).

.1 Hilti Intumescent Firestop Sealant (FS-ONE MAX).

.2 Hilti Fire Foam (CP 620)/CP 660.

.3 Hilti Flexible Firestop Sealant (CP 606).

.4 Hilti Firestop Silicone Sealant Gun Grade (CFS-S SIL GG).

.5 Hilti Firestop Silicone Sealant Self Leveling (CFS-S SIL SL).

.5 Intumescent sealants or caulking materials for use with combustible items (penetrants consumed by high heat and flame) including insulated metal pipe, PVC jacketed, flexible cable or cable bundles and plastic pipe.

.1 Hilti Intumescent Firestop Sealant (FS-ONE MAX).

.6 Foams, intumescent sealants, or caulking materials for use with flexible cable or cable bundles.

.1 Hilti Intumescent Firestop Sealant (FS-ONE MAX).

.2 Hilti Fire Foam (CP 620)/660.

.3 Hilti Flexible Firestop Sealant (CP 606).

.4 Hilti Firestop Silicone Sealant Gun Grade (CFS-S SIL GG).

.5 Hilti Firestop Silicone Sealant Self Leveling (CFS-S SIL SL).

.7 Firestop Putty Pads: Intumescent, non-hardening putty pads to be installed on metallic and non-metallic electrical switch and receptacle boxes to reduce horizontal separation between boxes to less than 610 mm (24 in):

.1 STI SpecSeal Series SSP Firestop Putty Pads.

.2 Hilti Firestop Putty Pad (CP 617).

.8 Materials used for large size/complex penetrations made to accommodate cable trays, multiple steel and copper pipes, electrical busways in raceways.

.1 Hilti Firestop Block (CFS-BL).

.2 Hilti Composite Sheet (CFS-COS).

.3 Hilti Firestop Mortar (CP 637).

.4 Hilti Fire Foam (CP 620)/660.

.5 Hilti Firestop Board (CP 675T).

.9 Non-curing, re-penetrable materials used for large size/complex penetrations made to accommodate cable trays, multiple steel and copper pipes, electrical busways in raceways.

.1 Hilti Firestop Block (CFS-BL).

.2 Hilti Firestop Board (CP 675T).

.10 Re-penetrable, round cable management devices for use with new or existing cable bundles penetrating gypsum or masonry walls.

.1 Hilti Speed Sleeve (CP 653) with integrated smoke seal fabric membrane.

.2 Hilti Firestop Cable Collar (CFS-CC).

.3 Hilti Firestop Sleeve (CFS-SL SK).

.4 Hilti Retrofit Sleeve (CFS-SL RK) for use with existing cable bundles.

.5 Hilti Gangplate (CFS-SL GP) for use with multiple cable management devices.

.6 Hilti Gangplate Cap (CFS-SL GP CAP) for use at blank openings in gangplate for future penetrations.

.11 For blank openings made in fire-rated wall or floor assemblies, where future penetration of pipes, conduits, or cables is expected.

.1 Hilti CFS-BL Firestop Block (for walls and floors).

.2 Hilti CFS-PL Firestop Plug (for walls and floors).

.12 Cast-In-Place Firestop Device: Single component molded firestop device installed on forms prior to concrete placement with totally encapsulated, tamper-proof integral firestop system and smoke sealing gasket. Device shall allow for a concrete floor thickness of minimum 63 mm (2-1/2 in) up to 914 mm (36 in) without the use of field applied extension tubing:

.1 STI SpecSeal CID Cast-In Firestop Device.

.2 Hilti CP 680 Cast-In Place Firestop Device (for floors only).

.13 For single or cable bundles up to one inch diameter penetrating gypsum, masonry, concrete walls or wood floor assemblies.

.1 Hilti CFS-D Firestop Cable Disc.

PART 3 - EXECUTION

3.1 INSTALLERS

.1 Labour Use to Install Firestop Systems

.1 To ensure complete harmony on the project site, the installation of each scope of work is to be performed jurisdictionally correct per existing trade agreements.

3.2 PREPARATION

.1 Verification of Conditions: Examine areas and conditions under which work is to be performed and identify conditions detrimental to proper or timely completion.

.1 Verify penetrations are properly sized and in suitable condition for application of materials.

.2 Surfaces to which firestop materials will be applied shall be free of dirt, grease, oil, rust, laitance, release agents, water repellents, and any other substances that may affect proper adhesion.

.3 Provide masking and temporary covering to prevent soiling of adjacent surfaces by firestopping materials.

.4 Comply with manufacturer's recommendations for temperature and humidity conditions before, during and after installation of firestopping.

.5 Do not proceed until unsatisfactory conditions have been corrected.

3.3 COORDINATION

.1 Coordinate construction of openings, penetrations to ensure that the fire stop systems are installed according to specified requirements.

.2 Coordinate sizing of sleeves, openings, core-drilled holes, or cut openings to accommodate through-penetration fire stop systems.

.3 Coordinate fire stopping with other trades so that obstructions are not placed in the way prior to the installation of the fire stop systems.

.4 Do not cover up through-penetration fire stop and joint system installations that will become concealed behind other construction until each installation has been examined by the building inspector.

3.4 INSTALLATION

.1 Regulatory Requirements: Install firestop materials in accordance with ULC Fire Resistance Directory or UL Products Certified for Canada (cUL) Directory or Omega Point Laboratories Directory.

.2 Manufacturer's Instructions: Comply with manufacturer's instructions for installation of through-penetration and construction joint materials.

.1 Seal all holes or voids made by penetrations to ensure an air and water-resistant seal.

.2 Consult with mechanical engineer, project manager, and damper manufacturer prior to installation of ULC or cUL firestop systems that might hamper the performance of fire dampers as it pertains to duct work.

.3 Protect materials from damage on surfaces subjected to traffic.

3.5 FIELD QUALITY CONTROL

.1 Examine sealed penetration areas to ensure proper installation before concealing or enclosing areas.

.2 Keep areas of work accessible until inspection by applicable code authorities.

.3 Inspection of through-penetration firestopping shall be performed in accordance with ASTM E 2174, “Standard Practice for On-Site Inspection of Installed Fire Stops”, or other recognized standard.

.4 Perform under this section patching and repairing of firestopping caused by cutting or penetrating of existing firestop systems already installed by other trades.

.5 Manufacturer’s Field Services: During Installation, provide periodic destructive testing inspections to assure proper installation/application. After installation is complete, submit findings in writing indicating whether or not the installation of the tested system identified was installed correctly.

3.6 IDENTIFICATION AND DOCUMENTATION

.1 The firestop contractor is to supply documentation for each single application addressed. This documentation is to identify each penetration location on the entire project.

.2 The Documentation Form for through penetrations is to include:

.1 A Sequential Location Number.

.2 The Project Name.

.3 Date of Installation.

.4 Detailed description of the penetration location.

.5 Tested System or Engineered Judgment Number.

.6 Type of assembly penetrated.

.7 A detailed description of the size and type of penetrating item.

.8 Size of opening.

.9 Number of sides of assemblies addressed.

.10 Hourly rating to be achieved.

.11 Installer’s Name.

.3 Copies of these documents are to be provided to the general contractor at the completion of the project.

.4 Identify through-penetration firestop systems with pressure-sensitive, self-adhesive, preprinted vinyl labels. Attach labels permanently to surfaces of penetrated construction on both sides of each firestop system installation where labels will be visible to anyone seeking to remove penetrating items or firestop systems. Include the following information on labels:

.1 The words: "Warning-Through Penetration Firestop System-Do Not Disturb. Notify Building Management of Any Damage."

.2 Contractor's Name, address, and phone number.

.3 Through-Penetration firestop system designation of applicable testing and inspecting agency.

.4 Date of Installation.

.5 Through-Penetration firestop system manufacturer's name.

.6 Installer's Name.

3.7 ADJUSTING AND CLEANING

.1 Remove equipment, materials and debris, leaving area in undamaged, clean condition.

.2 Clean all surfaces adjacent to sealed holes and joints to be free of excess firestop materials and soiling as work progresses.

END OF SECTION

PART 1 - GENERAL

1.1 SECTION INCLUDES

.1 Provide positive seismic restraints on electrical systems and components required by the building code and by the local authority having jurisdiction.

.2 This section covers design, supply, installation, and inspection of complete SFRS (Seismic Force Resisting System) for electrical systems.

1.2 REFERENCES

.1 Seismic restraints are to be provided for all electrical and non-structural components of building services in accordance with the current: NBCC; OBC, and good engineering practice (references listed below):

.1 CSA S832-14 (R2019), Seismic risk reduction of operation and functional components (OFCs) of buildings.

.2 SMACNA (Sheet Metal and Air-conditioning Contractors' National Association's) Seismic Restraint Manual Guidelines for Mechanical Systems (3rd ed.).

.3 ASHRAE (American Society for Heating, Refrigerating and Air-conditioning Engineers) A Practical Guide to Seismic Restraint; ASHRAE Applications Handbook, Seismic and Wind Restraint Design Chapter; ASHRAE Standard 171-2008: Methods of Test for Seismic restraints.

.4 VISCMA (The Vibration Isolation and Seismic Control Manufacturers Association) has developed Testing and Rating Standards for Seismic Restraint Components that comply with Code and ASHRAE based requirements.

.2 The following guides may be used for supplemental information on typical seismic installation practices. Where a conflict exists between the guides and these construction documents, the construction documents will preside.

.1 Federal Emergency Management Agency (FEMA) manual 413, Installing Seismic Restraints for Electrical Equipment, January 2014.

1.3 COORDINATION

.1 Trades shall supply necessary information to the Vibration Isolation Manufacturer regarding equipment to be isolated.

.2 Provide shop drawings to other trades for setting anchor bolts and other appurtenances necessary for the proper installation of this equipment.

1.4 SUBMITTALS

.1 Shop Drawings:

.1 Include placement drawings for electrical equipment and equipment assemblies including runs of cable trays and conduit/cable racks showing methods of attachment to particular structure for each piece of equipment and assembly and provide anchorage/attachment details. Submit samples of materials required to complete seismic restraint work for review if and when required.

.2 Product Data:

.1 Include Seismic Rating Data for each seismically rated isolator or restraint component.

.2 Submit copies of documents requested herein, testing reports, certificate of approvals, and commissioning sheets.

.3 Delegated Design Submittals:

.1 Submit for Consultant's review, seismic design drawings and product shop drawings with calculations approved and sealed by a Professional Engineer licensed and registered in Place of Work and experienced in such Work. Be responsible for costs for services of this Professional Engineer. Shop drawings to identify equipment type, manufacturer's name, model number and weight of equipment to be restrained.

.2 Include for manufacturer of vibration control products, to develop/design a seismic restraint system and perform seismic calculations in accordance with latest requirements of local governing building code, requirements of local governing authority having jurisdiction, and additional requirements specified in this article. Design of seismic restraints to include requirements to withstand forces of area rating as per local governing building code requirements.

.3 Provide calculations to determine restraint loadings for all restrained systems and equipment resulting from seismic forces.

1.5 CLOSEOUT SUBMITTALS

.1 Include for Professional Engineer to inspect same on site (note that multiple inspections to be required as work progresses) and to provide typewritten Inspection Reports to the Consultant throughout construction and to provide "Letters of Assurance and Conformance" with specified Codes, Standards and Bylaws. Additionally, include copies of documents in Operating and Maintenance Manuals.

.2 At the completion of the project, upon request by the Consultant, attend a review of the installation on site.

.3 Provide a sealed written report, certifying that the installations have been completed in accordance with the specified design(s) and shop drawing(s) can be furnished, by others, upon this request.

.4 The installing contractor shall submit a report to the Consultant, including the manufacturer's representative's final report, indicating that all seismic restraint material has been properly installed, or steps that are to be taken by the Contractor to properly complete the seismic restraint work as per the specifications.

.5 Record documents: documented torques.

1.6 QUALITY ASSURANCE

.1 The contractor shall utilize a supplier familiar/experienced with the design of seismic systems to provide a comprehensive package of isolation and seismic restraint for the project. Provide detailed shop drawings showing the proposed restraint system for all required equipment, piping, and ductwork on the project. The shop drawings shall include calculations certified by a Profession Engineer (Structural), licensed in the jurisdiction where the project occurs.

.2 Certification documents to be signed and sealed by a Professional Engineer (Structural) with at least 5 years experience in the design of seismic restraints.

PART 2 - PRODUCTS

2.1 MANUFACTURERS

.1 Manufacturer List:

.1 Eaton TOLCO.

.2 Mason Industries.

.3 Kinetics Noise Control.

.4 nVent (Caddy).

.5 Vibro-Acoustics.

.2 Substitutions: Other manufacturers acceptable to the Authority Having Jurisdiction.

2.2 DESIGN CRITERIA

.1 Review architectural and structural drawings to confirm the seismic criteria for the project.

2.3 GENERAL

.1 Electrical equipment installation is to meet local governing authority having jurisdiction and code seismic requirements and additional requirements for vibration isolation.

.2 Provide labour, materials, and equipment required and necessary to seismically restrain electrical equipment and equipment bases including concrete pads, and guarantee function of materials and equipment supplied.

.3 Provide additional seismic requirements for suspended electrical raceways, luminaires, and other equipment as per governing local authority requirements and requirements of current codes and by-laws.

.4 Provide seismic restraining devices to restrain mechanical, electrical, and related equipment, and equipment bases including concrete pads, as per governing local authority requirements and requirements of current codes and by-laws.

.5 In event that inadequate isolation is provided by isolation product manufacturer's isolation package, be responsible for improving isolation to an acceptable standard at no additional cost to contract. Isolation product manufacturer's seismic restraint engineer to verify that seismic restraints and combination isolator/restraints intended for use on project are fit for intended purpose. Be responsible for ensuring that manufacturer's seismic restraints are in compliance with applicable local building code requirements for Place of Work.

2.4 VIBRATION CONTROLS AND SEISMIC RESTRAINTS

.1 Electrical equipment installation is to meet local governing authority having jurisdiction and code seismic requirements and additional requirements outlined herein.

.2 Provide labour, materials, and equipment required and necessary to seismically restrain electrical equipment and equipment bases including concrete pads, and guarantee function of materials and equipment supplied.

.3 Make electrical connections to vibration-isolated equipment with flexible conduit or other flexible means acceptable to the Consultant and local governing authority having jurisdiction so as not to restrict maximum anticipated movement of equipment under seismic excitation movement.

.4 In event that inadequate isolation is provided by isolation product manufacturer's isolation package, be responsible for improving isolation to an acceptable standard at no additional cost to contract. Isolation product manufacturer's seismic restraint engineer to verify that seismic restraints and combination isolator/restraints intended for use on project are fit for intended purpose. Be responsible for ensuring that manufacturer's seismic restraints are in compliance with applicable local building code requirements for Place of Work.

.5 Provide additional seismic requirements for suspended electrical raceways, luminaires, and other equipment as per governing local authority requirements and requirements of current codes and by-laws.

.6 Include for manufacturer of vibration control products to develop/design a seismic restraint system and perform seismic calculations in accordance with latest requirements of local governing building code, requirements of local governing authority having jurisdiction, and additional requirements specified in this article. Design of seismic restraints to include provisions to withstand forces of area rating as per governing building code requirements.

.7 Provide vibration isolation for equipment or parts connected rigidly to isolated equipment.

.8 Provide vibration isolation for transformers by means of bridge bearing neoprene isolators or open steel spring isolators. Static deflection of vibration isolators for electrical transformers is indicated below. Isolators requiring a static deflection greater than 13 mm (1/2") to be open spring isolators unless otherwise specified.

Transformer Rating	On Grade (Isolated Slab)	Location on Grade (Continuous Slab)	Upper Floor (Suspended Slab)
Less than 10 kVA	6 mm	6 mm	18 mm
10 – 100 kVA	6 mm	12 mm	25 mm
Greater than 100 kVA	6 mm	25 mm	38 mm

.9 Standard vibration isolation requirements of equipment such as gensets, power transformers and distribution equipment, to comply with following:

.1 Choose equipment isolation mounts on basis of achieving 98% vibration isolation efficiency at lowest operating speed. Natural frequency of each vibration isolation system to be at least 1/10 of lowest excitation frequency of rotating machinery, whenever practicable, but in no case less than 1/7. Where structural floor deflection exceeds 1/10 of determined static deflection of isolator, increase isolator static deflection to maintain this minimum ratio of floor to isolator deflection. Where static deflections are shown on drawings, Specifications, or schedules, they are to be used as a guide only. Actual isolators are to achieve required static deflection under load, with at least 50% reserve deflection;

.2 Submit shop drawings identifying equipment, lowest operating speed, weight, brand, type and location of isolators prior to ordering or fabrication.

.10 Neoprene Isolators:

.1 Neoprene isolators to be bridge bearing rated type manufactured from bridge bearing quality neoprene, CAN/CSA-S6-88 Section 11.5.8.

.2 Where a ribbed pad is used, height of ribs is not to exceed 0.7 times width of rib. A steel layer to be used to distribute load in a multi-layered unit.

.3 Select neoprene pads or elements at supplier’s optimum recommended loading and do not load beyond limit specified in neoprene manufacturer’s literature.

.4 Test neoprene isolators to ASTM specifications. Submit to Consultant, following test data to verify performance of neoprene isolators:

.1 A data sheet listing all of ASTM test results.

.2 Load deflection curves for isolator indicating deflection to full compression for both laterally restrained and unrestrained isolators.

.11 Open Steel Spring Isolators:

.1 Springs to be "Iso-Stiff" (spring coefficient 1.0 to 1.5) with a working deflection between 0.3 and 0.6 of solid deflection.

.2 Spring mounts to be complete with levelling devices, minimum 6 mm (1/4") thick neoprene sound pads, and zinc chromate plated hardware.

.3 Sound pads to be sized for a minimum deflection of 1.2 mm (0.0472") and meet requirements for neoprene isolators.

.12 Seismic restraints to restrain equipment in all directions and to be sized to meet appropriate Sp factor defined in Table 4.1.9.D of current National Building Code and Commentary J of Supplement to current Code. Calculations bearing seal of a qualified Professional Engineer to be submitted with shop drawings to justify stated seismic restraint requirements.

.13 Attachment points and fasteners to be capable of withstanding a load of 3 times sized capacity of restraint. Equipment suppliers to provide proof of conformance with this clause by means of shop drawings certified by a qualified Professional Engineer.

.14 Submit test data to the Consultant, showing load deflection curves up to 1.5 times rated capacity of restraint, and certifying that neither neoprene elements nor restraint body sustained any deformation after release of load.

.15 Adjust restraints to have clearances between 3 mm (1/8") and 6 mm (1/4") under normal operating conditions of equipment.

PART 3 - EXECUTION

3.1 GENERAL

.1 The following typical electrical equipment requires seismic protection (as applicable to Project):

.1 Transformers;

.2 Switchboards/switchgear;

.3 Panelboards;

.4 Engine/generator and generator control panel;

.5 Automatic transfer switches;

.6 Fire alarm system, cabinets and devices;

.7 Luminaires;

.8 Mobile generator connection box;

.9 Conduit and duct banks;

.10 Genset PLC system and cabinet;

.11 Other electrical equipment, as required.

3.2 PREPARATION

.1 The Contractor shall notify the local representative of the seismic restraint materials manufacturer prior to installing any seismic restraint devices. The Contractor shall seek the representative's guidance in any installation procedures with which he/she is unfamiliar.

.2 Obtain required training from manufacturer's representative on any special installation procedures. Install components in accordance with manufacturer's instructions to suit specific installation requirements.

.3 Coordinate size, shape, reinforcement, and attachment of all housekeeping pads supporting vibration/seismically rated equipment. Concrete shall have a minimum compressive strength of 20 kPa (3,000 psi) or as specified by the Consultant. Coordinate size, thickness, doweling, and reinforcing of concrete equipment housekeeping pads and piers with vibration isolation and seismic restraint device manufacturer to ensure adequate space, embedment and prevent edge breakout failures. Pads and piers must be adequately doweled into structural slab.

.4 Housekeeping Pads must be adequately reinforced and adequately sized for proper installation of equipment anchors. Refer seismic restraint manufacturer's written instructions.

.5 Coordinate with vibration/seismic restraint manufacturer and the structural engineer of record to locate and size structural supports underneath vibration/seismically restrained equipment (e.g., roof curbs, cooling towers and other similar equipment). Installation of all seismic restraint materials specified in this section shall be accomplished as per the manufacturer's written instructions. Adjust isolators and restraints after piping systems have been filled and equipment is at its operating weight, following the manufacturer's written instructions.

3.3 INSTALLATION

.1 Isolated and restrained equipment, conduit located on roofs must be attached to the structure. Supports (e.g., sleepers) that are not attached to the structure are not acceptable.

.2 Attach conduit to the trapeze per seismic restraint manufacturer's design. Install cables so they do not bend across sharp edges of adjacent equipment or building structures.

.3 Do not brace or support equipment to separate portions of the structure that may act differently in response to an earthquake. For example, do not connect a transverse restraint to a wall, and then a longitudinal restraint to either a floor/ceiling/roof at the same braced location.

.4 Install vertical braces to stiffen hanger rods and prevent buckling per seismic restraint manufacturer's design. Clamp vertical brace to hanger rods. Requirements apply equally to hanging equipment. Do not weld vertical braces to hanger rods.

.5 General Seismic Controls for Electrical Systems:

.1 Seismically restrain per specific code requirements all Electrical components listed below (unless otherwise indicated on the drawings), using seismic cable restraints:

.1 Seismically restrain all conduit 78 mm (3") in nominal diameter and larger. Single supported conduit is restrained in the same fashion as single clevis supported pipe.

.2 Seismically restrain all conduit, bus ducts, or cable trays that are supported on trapeze bars, that have been assigned a Component Importance Factor equal to [1.5], and that have a total weight greater than 146 N/m (10 lb/ft). This total weight includes not only the conduit, bus duct, or cable trays, but also includes the trapeze bars as well.

.2 The Contractor is to provide the weight per unit length for cable trays and bus duct.

.3 Single supported conduit and trapeze supported conduit, bus duct, and cable trays to be seismically restrained in a manner similar to mechanical pipes and HVAC ducts.

.4 Provide seismic restraint components intended to be used with suspended single supported conduit and trapeze supported conduit, cable trays, and bus ducts. Components intended to both support and restrain distribution systems such as wall mounted conduit, cable trays, and bus ducts will need to be designed and evaluated for both the dead weight load and the design horizontal seismic load.

.5 To ensure that the seismic forces are transferred properly to the restraint points, cables should be strapped either individually or in bundles to the cable tray at regular intervals. It is necessary for the conduit, bus ducts, and cable trays to be attached to the trapeze bars sufficiently to resist the design horizontal seismic forces, both transverse (T) and longitudinal (L).

.6 Brace a change of direction longer than 3.7 m (12 ft).

.7 This specification does not allow the use of the "12-inch rule" where the piping and electrical may be exempted from seismic restraint based on the length of the support rods provided that the rods are not subjected to bending moments.

.8 Install restraint cables so they do not bend across edges of adjacent equipment or building structure. Tie back to structure at 45 degrees to the structure.

.9 Longitudinal restraints for single pipe supports shall be attached rigidly to the pipe, not to the pipe hanger.

.10 For supports with multiple pipes (trapezes), secure pipes to trapeze member with clamps approved for application.

.11 Install flexible metal hose loops in piping which crosses building seismic joints, sized for the anticipated amount of movement.

.12 Install flexible piping connectors where adjacent sections or branches are supported by different structural elements, and where the connections terminate with connection to equipment that is

anchored to a different structural element from the one supporting the connections as they approach equipment.

.13 Roof mounted duct is to be installed on sleepers or frames mechanically connected to the building structure. Roof anchors and seismic cables or frames shall be used to resist seismic and wind loading. Wind loading factors shall be determined by the registered design professional.

.14 Longitudinal restraints for single conduit supports shall be attached rigidly to the pipe, not to the pipe/conduit hanger.

.15 For supports with multiple conduits (trapezes), secure conduit to trapeze member with clamps approved for application.

.16 Rod Stiffener Clamps are required where the hanger rod exceeds the maximum length shown in the seismic calculation sheets. They are only required at restraint locations.

.17 Seismically Rated Beam Clamps are required where welding to or penetrations to steel beams are not approved.

.18 Adjust restraint cables so that they are not visibly slack. Cable not to support weight during normal operation.

.19 Seismic systems are to be compatible with requirements for anchoring and guiding of systems.

.20 Drilled or power-driven anchors or fasteners shall not be permitted for use with seismic control measures.

.21 Friction due to gravity does not constitute a seismic attachment.

.22 Seismic restraint connections are not to be connected to the bottom chord of steel joists or the bottom flange of steel beams.

.23 Standard beam clamps can be used to support restrained components; they cannot be used to connect the seismic restraint to the structure – only for the hanger rods.

.24 Make electrical connections to vibration-isolated equipment with flexible conduit or other flexible means acceptable to the Consultant and local governing authority having jurisdiction so as not to restrict maximum anticipated movement of equipment under seismic excitation movement.

.6 Panelboards, Lighting, Emergency Lighting Battery Units, and Emergency Remote Heads

.1 Wall mounted panelboards, lighting, emergency lighting battery units, and emergency remote heads can be directly mounted to the building structure with approved fasteners to suit. Minimum two or more anchors shall be provided on each side of all wall mounted equipment.

.2 For emergency battery units, pre-installed brackets must be used.

3.4 FIELD TESTS AND INSPECTIONS

.1 Test, adjust, and certify installation. Submit copies of test report to the Consultant.

.2 Inspect for removal of break away hardware to ensure proper torques of installed systems.

.3 For non-visually verifiable product, manufacturers to verify proper torque for a minimum 10% of application. Document torques for applications per manufacturer's instructions.

.4 The contractor shall notify the local representative of the seismic restraint materials manufacturer mid-way through the listed project if they require an inspection of any and all vibration and seismic restraint devices already installed. A typewritten report of any installation errors, improperly selected devices, or other fault in the system which could affect the performance of the system shall be documented and the contractor shall perform all steps that are required from this written report to properly complete the vibration and seismic restraint work as per the specifications. Report to include clear sketches as required.

.5 The installing contractor shall submit a report to the Consultant, including the manufacturer's representative's final report, indicating that all seismic restraint material has been properly installed,

or steps that are to be taken by the contractor to properly complete the seismic restraint work as per the specifications.

END OF SECTION

PART 1 - GENERAL

1.1 SECTION INCLUDES

.1 Nameplates and labels.

.2 Wire and cable markers.

.3 Conduit markers.

.4 Receptacle labels.

.5 Signage.

1.2 SUBMITTALS

.1 Product Data: Provide catalogue data for nameplates, labels, and markers.

.2 Provide shop drawings of nameplates for Consultant’s review prior to fabrication (scale 1:1)

.3 Manufacturer's Instructions: Indicate application conditions and limitations of use stipulated by Product testing agency specified under regulatory requirements. Include instructions for storage, handling, protection, examination, preparation and installation of Product.

1.3 REGULATORY REQUIREMENTS

.1 Provide products listed and classified by CSA (Canadian Standards Association) as suitable for the purpose specified and indicated.

PART 2 - PRODUCTS

2.1 NAMEPLATES AND LABELS

.1 Nameplates:

.1 Engraved three-layer laminated plastic, letters on contrasting background.

.2 Colours to match existing building system, where applicable. If no building system exists, use the following:

.1 347/600 Volt System: White text on Blue Background.

.2 120/208 Volt System: Black text on White Background.

.3 Fire Detection System: White text on Red Background.

.4 Emergency Lighting System: Red text on White Background.

.5 LV Systems: White text on Green Background.

.6 120/208 Volt Uninterruptable Power Supply (UPS): White text on Orange Background.

.3 Confirm colours with Engineer prior to ordering nameplates.

.2 Equipment Nameplates to indicate:

.1 Equipment/Panelboard ID

.2 Ampacity.

.3 Voltage

.4 Number of Phases

.5 Number of wires in system

.6 Interrupting Capacity

.7 Size, number of poles, Panelboard ID, and circuit number of upstream overcurrent protection device.

.1 Location of upstream device if not in the same room.

.3 Coordination Study Labels.

.4 Arc Flash Study Labels.

.5 Locations:

.1 Distribution panelboards, and individual distribution panelboard branch breakers.

.2 Receptacle panelboards.

.3 Each electrical distribution and control equipment enclosure.

.4 Uninterruptible Power Supply.

.5 Mechanical Equipment.

.6 UPS Receptacles.

.7 Disconnects, starters and contactors: indicate equipment being controlled and voltage.

.8 Terminal cabinets, junction boxes, and pull boxes: indicate system and voltage.

.9 Transformers: indicate capacity, primary and secondary voltages.

.6 Letter Size:

.1 Use 3 mm letters for identifying individual equipment and loads.

.2 Use 6 mm letters for identifying grouped equipment and loads.

.7 Labels:

.1 Mechanically fastened with sheet metal screws, with 5 mm white letters on black background.

.2 White letters on red background for UPS and equipment, and devices downstream of UPS.

.3 Labels: embossed plastic labels with 6 mm high letters unless specified otherwise.

.4 Wording on nameplates and labels to be approved by the Engineer prior to manufacture.

.5 Allow for minimum of twenty-five (25) letters per nameplate and label.

.6 Nameplates for terminal cabinets and junction boxes to indicate system and/or voltage characteristics.

.7 Terminal cabinets and pull boxes: indicate system and voltage.

2.2 WIRING IDENTIFICATION

.1 Identify wiring with permanent indelible identifying markings, numbered, on both ends of phase conductors of feeders and branch circuit wiring.

.2 Maintain phase sequence and colour coding throughout.

.3 Colour coding: to CSA C22.1.

.4 Use colour coded wires in communication cables, matched throughout system.

2.3 WIRE MARKERS

.1 Description: tape, split sleeve, or tubing type wire markers.

.2 Locations: Each conductor at panelboard gutters, pull boxes, outlet and junction boxes and each load connection.

.3 Legend:

.1 Power and Lighting Circuits: Branch circuit or feeder number indicated on drawings.

.2 Control Circuits: Control wire number indicated on shop drawings.

2.4 CONDUIT MARKERS

.1 Colour code conduits, boxes and metallic sheathed cables.

.2 Location: Provide markers for each conduit longer than 2 m.

.3 Code with plastic tape or paint at points where conduit or cable enters wall, ceiling, or floor, and at 15 m intervals.

.4 Colours to match equipment nameplate background colour:

.1 347/600 Volt System: Blue.

.2 120/208 Volt System: Black.

.3 Fire Alarm System: Red.

.4 Emergency Lighting System: Red/White.

.5 LV Systems (EPO, Remote Monitoring, Generator Control, Communications): Green.

.6 120/208 Volt Uninterruptable Power Supply (UPS): Orange

.5 Confirm colours with Engineer prior to commencing rough-in.

2.5 BRANCH BREAKER LABELS

.1 General:

.1 Legibly identify every circuit and circuit modification as to its clear, evident, and specific purpose or use. Include sufficient detail to allow each circuit to be distinguished from all others.

.2 Label spare positions that contain unused overcurrent devices or switches.

.3 Do not describe any circuit in a manner that depends on transient conditions of occupancy.

.2 Switchboards, distribution panelboards, enclosed breakers, and disconnect switches:

.1 Locate identification at each switch.

.2 Branch breaker nameplates on switchboards, distribution panelboards and switchboards, and generator load breakers to indicate:

.1 Locate identification at each switch on a switchboard.

.2 Identification of downstream equipment fed from the breaker.

.1 Location of downstream device if not in the same room.

.3 Breaker size and number of poles.

.4 Interrupting Capacity.

.5 Circuit number (where applicable).

.6 Do not describe any circuit in a manner that depends on transient conditions of occupancy.

.3 Lighting and Receptacle Panelboards:

.1 Provide a circuit directory that is located on the face or inside of the panel door.

.2 Do not describe any circuit in a manner that depends on transient conditions of occupancy.

2.6 RECEPTACLE LABELS

.1 Label all receptacles with the panelboard ID and circuit number.

.2 Use receptacle labels by electronic labeller Brother P-Touch, model PT-20/25, Dymo-Tape or approved equal.

.3 Location: On receptacle wall plate.

PART 3 - EXECUTION

3.1 EQUIPMENT NAMEPLATES FROM MANUFACTURERS

.1 Ensure manufacturer's nameplates, CSA labels and identification nameplates are visible and legible after equipment is installed.

.2 Manufacturers' nameplates and CSA labels are to be visible and legible after equipment is installed. Provide warning signs, as specified, or to meet requirements of Inspection Department, Health and Safety, and the Consultant.

.3 Label power outlets with circuit identification on visible portion of faceplate or surface mounted outlet box.

3.2 CONDUIT IDENTIFICATION

.1 Locate labels as follows:

.1 At every end of every conduit, duct or cable run, adjacent to item of equipment serviced.

.2 On each exposed conduit, duct or cable passing through a wall, partition or floor (one on each side of such wall partition or floor).

.3 At intervals of 50'-0" along every exposed conduit, duct or cable run exceeding 50'-0" in length.

.4 At every access point on concealed conduit duct or cable.

.2 Place labels so as to be visible from 5'-0" above adjacent floor platform.

3.3 PREPARATION

.1 Degrease and clean surfaces to receive nameplates and labels.

3.4 APPLICATION

.1 Confirm colours prior to start of work.

.2 Install nameplate and label parallel to equipment lines.

.3 Secure nameplate to equipment front using adhesive.

.4 Secure nameplate to inside surface of door on panelboard that is recessed in finished locations.

.5 Identify conduit using field painting.

.6 Paint coloured band on each conduit longer than 2 m.

.7 Paint bands 6 m on centre.

3.5 LABELLING

.1 Colour code wiring consistently throughout the installation and generally match colour coding of internal wiring of pre-wired components.

.2 Label wiring with point name using Thomas & Betts 12 character polestar metalized labels with 3 rows of characters per label, or equal by Brady. Label to occur as a minimum at both ends and at pull boxes of the wiring run.

.3 Identify all pull boxes, junction boxes, etc. (installed as part of this project or used by this project) with the exact use of the box. Indelible felt pen marker is acceptable.

.4 Label light control items with point name using Thomas & Betts 12 character label, or equal by Brady. Label to be black lettering on clear backing.

.5 Label relays and controllers inside panels using Thomas & Betts 12 character label, or equal by Brady.

.6 Provide red, 13 mm (1/2 inch) diameter, sticker on emergency light fixture frame. Include circuit number on sticker with thin permanent black mark pen.

3.6 LABELS AND SIGNS

.1 Manufacturers' nameplates and CSA labels are to be visible and legible after equipment is installed. Provide warning signs, as specified, or to meet requirements of Inspection Department, Health and Safety, and the Consultant.

.2 Label power outlets with circuit identification on visible portion of faceplate or surface mounted outlet box.

END OF SECTION

PART 1 - GENERAL

1.1 SECTION INCLUDES

.1 Provide a short circuit and coordination study for the [existing and] new portions of electrical distribution system. The basic analysis shall include a protective device evaluation, and a protective device coordination study.

.2 The project shall begin at the point of utility service for the facility and continue down through the system to all downstream distribution and branch panelboards, motor control centres and significant motor locations.

.3 The project shall include any new generators and any associated emergency power distribution equipment, including automatic transfer switches and generator ground fault protection.

1.2 RELATED REQUIREMENTS

.1 Section 26 05 73.19 – Arc-Flash Hazard Analysis.

.2 Single Line Diagram.

1.3 REFERENCE STANDARDS

.1 American National Standards Institute (ANSI):

.1 ANSI C37.010 – Standard Application Guide for AC High Voltage Circuit Breakers Rated on a Symmetrical Current Basis.

.2 ANSI C37.13 – Standard for Low Voltage AC Power Circuit Breakers Used in Enclosures.

.3 ANSI C 37.41 – Standard Design Tests for High Voltage Fuses, Distribution Enclosed Single-Pole Air Switches, Fuse Disconnecting Switches and Accessories.

.4 ANSI C57.12.00 – Standard General Requirements for Liquid-Immersed Distribution, Power, and Regulating Transformers.

.2 Institute of Electrical and Electronics Engineers, Inc. (IEEE):

.1 IEEE 141 – Recommended Practice for Electric Power Distribution and Coordination of Industrial and Commercial Power Systems.

.2 IEEE 241 – Recommended Practice for Electric Power Systems in Commercial Buildings.

.3 IEEE 242 – Recommended Practice for Protection and Coordination of Industrial and Commercial Power Systems.

.4 IEEE 399 – Recommended Practice for Industrial and Commercial Power System Analysis.

.5 IEEE 1015 – Recommended Practice for Applying Low-Voltage Circuit Breakers Used in Industrial and Commercial Power Systems.

1.4 SUBMITTALS

.1 In accordance with Section 01 33 00:

.2 Submit the following:

.1 Submit electronic copy of the protection coordination study for Consultant's review.

.2 Shop drawings for equipment affected by the coordination study will not be reviewed until the coordination study has been submitted and reviewed.

.3 Include a one-line diagram of the system.

.3 Projection System Coordination:

.1 Prepare a graph or coordination curves, prior to manufacture of service entrance and distribution equipment on K & E No. 336E Time-Current characteristic graph paper. Time-current characteristics shall be plotted of the following:

.1 Supply Authorities relays or fuses protecting incoming service (Contractor under this section shall obtain this information).

.2 Main and feeder protective devices at every voltage level used in distribution system.

.3 Protective devices associated with largest motor and/or refrigeration compressor.

.2 Preliminary submission of graph for comment will be accepted. Submit graph to Supply Authority for approval by them as providing satisfactory co-ordination. When curves have been approved by Supply Authority, they shall be submitted for approval. After approval has been obtained, order protective devices, and calibrate to conform with these curves.

.3 Each time-current characteristic curve sheet shall include:

.1 A single line diagram for the portion of the system involved.

.2 Transformer damage curves (where applicable).

.3 Cable damage curves (where applicable).

.4 Available fault levels for the portion of the system involved.

.4 Consult manufacturer of the refrigeration compressors and obtain recommendations for settings on starters. Incorporate information in co-ordination curves and submit the associated curves to Compressor Manufacturer and obtain approval from the manufacturer.

.5 Compressor manufacturer and mechanical trade contractor will determine and calibrate proper protection on motor starters and will ensure that it coordinates with protective devices on switchboard.

.6 Co-ordination curves, mentioned above, shall be prepared by distribution equipment manufacturers as soon as possible after award of contract.

.7 At the option of this contractor under this section, these co-ordination curves may also be prepared by an independent testing organization. In this case, the independent testing organization shall determine the proper settings of all protective relays and devices and pass them on to the switchboard manufacturer for incorporation into the switchboards. Include all associated costs in the tender.

.8 Distribution Equipment manufacturers shall examine drawings and specifications prior to award of contract to ensure that relays and devices being supplied by them will co-ordinate satisfactorily to Supply Authority requirements. Payment will not be allowed, after award of contract, for extra charges due to device changes to comply with recommended practices, due to oversight or negligence by distribution equipment manufacturers.

.4 [Upon review by the Consultant, submit the coordination study to the local electrical utility for their review and approval.]

1.5 CLOSEOUT SUBMITTALS

.1 The Engineer who prepared the report shall visit the site and confirm that the feeder sizes as installed are consistent with the report as submitted.

.2 Submit final version of the report with as-constructed feeder lengths and feeder sizes.

.3 Provide one electronic copy of the coordination study. Provide one hardcopy of the final report in the O&M manual, and provide one electronic copy of the final report.

1.6 QUALITY ASSURANCE

.1 Preparer Qualifications: Firm experienced in the analysis, evaluation, and coordination of electrical distribution systems and similar to the system for this project.

.2 The study shall be prepared in accordance with the latest edition of NETA ATS, the Canadian Electrical Code, as well as manufacturer's recommendations.

.3 Short-Circuit Analysis and Coordination Study shall be performed by a registered Professional Engineer. Study shall be signed and sealed by the Engineer. The Engineer shall have a minimum of eight years experience in the analysis, evaluation, and coordination of electrical distribution systems.

.4 The firm conducting the study shall have one million worth of Professional Liability Insurance in addition to standard general insurance.

PART 2 - PRODUCTS

2.1 MANUFACTURERS

.1 Independent Testing Organizations

.1 AC Tesla.

.2 Brosz and Associates.

.3 C-INTECH.

.4 Eastenghouse.

.5 G.T. Wood.

.6 Haronitis and Associates Ltd.

.7 Qualus (formerly Enkompass).

.2 [Electrical distribution manufacturers:]

.1 Eaton.

.2 Schneider Electric.

2.2 PROTECTIVE DEVICE COORDINATION STUDY

.1 Prepare coordination time-current characteristic curves to determine the required settings/sizes of the protective devices to maximize selectivity. The utility upstream protective device feeding the facility shall be maintained as the upper limit for coordination. These settings shall be obtained by the preparer, along with any other protective device setting requirements. The coordination curves shall be prepared on log-log paper and illustrate adequate clearing times between series devices. The curves shall be created through the use of the study software package, but must reflect actual protective devices to be installed. Adequate time-current curves shall be generated to depict coordination. In addition, protective device characteristics shall be suitably determined to reflect calculated short-circuit levels at the location.

.2 A narrative analysis shall accompany each coordination curve sheet and describe the coordination and protection in explicit detail. All curve sheets shall be multi-colour for improved clarity. Areas lacking complete coordination shall be highlighted and reasons provided for allowing condition to remain or provide solution to resolve situation. System coordination, recommended ratings, and setting of protective devices shall be accomplished by a registered professional electrical engineer with a minimum of eight years of current experience in the coordination of electrical power systems.

.3 The following information shall be provided on all curve sheets:

.1 Device identification and associated settings/size.

.2 Voltage at which curves are plotted.

.3 Current multiplier.

.4 ANSI frequent fault damage curve.

.5 Cable insulation damage curves.

.6 Transformer inrush point.

.7 Single-line for the portion of the system.

.8 Motor starting profiles (where applicable).

2.3 SINGLE LINE DIAGRAM

.1 The final report shall include a multi-colour single line diagram of the electrical distribution system within the scope of the project. The single line diagram shall include:

.1 Transformer rating, voltage ratio, impedance, and winding connection.

.2 Feeder cable phase, neutral and ground sizes, length of cable, conductor material, and conduit size and type.

.3 Switchgear, switchboards, panelboards, MCC's, fuses, circuit breakers, ATS's and switches continuous current ratings.

.4 Protective relays with appropriate device numbers and CT's and PT's with associated ratios.

.5 Detailed legend indicating device type identification and other significant details.

PART 3 - EXECUTION

3.1 EXAMINATION

.1 Obtain fault level and X/R ratio information from the utility.

3.2 SUMMARY

.1 The results of the system studies shall be summarized in a final report.

.2 Where required, copies of the final report shall be submitted to the Supply Authority for their review and approval. Submit approved copies of the report to the Consultant.

3.3 ADJUSTING

.1 The contractor shall engage the manufacturer's service group or alternately a qualified independent testing firm to perform field adjustments of the protective devices as required for placing the equipment in final operating condition. The settings shall be in accordance with the approved short circuit study and protective device evaluation / coordination study.

.2 Necessary field settings of devices and adjustments and minor modifications to equipment to accomplish conformance with the approved protective device coordination study, shall be carried out by manufacturer's service group.

.3 Submit a final service report confirming that settings have been completed.

END OF SECTION

PART 1 - GENERAL

1.1 SECTION INCLUDES

.1 Provide an Arc Flash Hazard Analysis Study per the requirements described in CSA Z462 Standard for Electrical Safety in the Workplace.

.2 The arc flash hazard analysis shall be performed according to the IEEE 1584 equations that are obtained in CSA Z462-08, Annex D, or more recent version of the standard as cited by this Section.

.3 The scope of the studies shall include all existing distribution equipment and all new distribution equipment supplied by the equipment manufacturer under this contract.

1.2 RELATED REQUIREMENTS

.1 Section 26 05 73.16 – Coordination Studies.

.2 Single Line Diagram.

1.3 REFERENCES

.1 Institute of Electrical and Electronics Engineers, Inc. (IEEE):

.1 IEEE 141 – Recommended Practice for Electric Power Distribution and Coordination of Industrial and Commercial Power Systems.

.2 IEEE 242 – Recommended Practice for Protection and Coordination of Industrial and Commercial Power Systems.

.3 IEEE 399 – Recommended Practice for Industrial and Commercial Power System Analysis.

.4 IEEE 241 – Recommended Practice for Electric Power Systems in Commercial Buildings.

.5 IEEE 1015 – Recommended Practice for Applying Low-Voltage Circuit Breakers Used in Industrial and Commercial Power Systems.

.6 IEEE 1584-2018 - Guide for Performing Arc-Flash Hazard Calculations.

.2 American National Standards Institute (ANSI):

.1 ANSI C57.12.00 – Standard General Requirements for Liquid-Immersed Distribution, Power, and Regulating Transformers.

.2 ANSI C37.13 – Standard for Low Voltage AC Power Circuit Breakers Used in Enclosures.

.3 ANSI C37.010-2016 – Standard Application Guide for AC High Voltage Circuit Breakers Rated on a Symmetrical Current Basis.

.4 ANSI C37.41 – Standard Design Tests for High Voltage Fuses, Distribution Enclosed Single-Pole Air Switches, Fuse Disconnecting Switches and Accessories.

.3 CSA Group:

.1 CSA C22.1:24, Canadian Electrical Code, Part 1 (26th Edition), Safety Standard for Electrical Installations.

.2 Ontario Electrical Safety Code (29th edition/2024).

.3 CSA Z462:24, Workplace electrical safety.

1.4 SUBMITTALS

.1 Submit the arc flash study to the Consultant prior to receiving final review of the distribution equipment shop drawings and/or prior to release of equipment drawings for manufacturing. If formal completion of the studies may cause delay in equipment manufacturing, approval from the engineer

may be obtained for preliminary submittal of sufficient study data to ensure that the selection of device and characteristics will be satisfactory.

.2 [Upon review by the Consultant, submit the arc-flash study to the local electrical utility for their review and approval.]

1.5 CLOSEOUT SUBMITTALS

.1 The results of the protective device coordination and arc flash hazard analysis studies shall be summarized in a final report. Three (3) bound copies of the complete final report shall be submitted. Additional copies of the complete report with input and output data shall be provided on CD in PDF format.

.2 The report shall include the following sections:

.1 Executive Summary.

.2 Descriptions, purpose, basis, and scope of the study.

.3 Tabulations of circuit breaker, fuse, and other protective device ratings versus calculated short circuit duties.

.4 Protective device time versus current coordination curves, tabulations of relay and circuit breaker trip unit settings, fuse selection.

.5 Fault current calculations including a definition of terms and guide for interpretation of the computer printout.

.6 Details of the incident energy and flash protection boundary calculations.

.7 Recommendations for system improvements, where needed.

.8 Single Line Diagram.

.3 Arc flash labels (refer to CSA Z462 Annex Q) shall be provided in hard copy only.

1.6 QUALIFICATIONS

.1 Arc flash hazard analysis studies shall be conducted under the supervision and approval of a licensed Professional Electrical Engineer skilled in performing and interpreting the power system studies.

.2 The licensed Professional Electrical Engineer shall be a full-time employee of the equipment manufacturer or an approved engineering firm.

.3 The licensed Professional Electrical Engineer shall have a minimum of eight (8) years of experience in performing power system studies.

.4 The equipment manufacturer or approved engineering firm shall demonstrate experience with Arc Flash Hazard Analysis by submitting names of at least ten actual arc flash hazard analysis it has performed in the past year.

1.7 COMPUTER ANALYSIS SOFTWARE

.1 The studies shall be performed using the latest revision of the SKM or equivalent.

PART 2 - PRODUCTS

2.1 MANUFACTURERS

.1 Independent Testing Organizations:

.1 AC Tesla.

.2 Brosz and Associates.

.3 C-INTECH.

.4 Eastenghouse.

.5 G.T. Wood.

.6 Haronitis and Associates Ltd.

.7 Qualus (formerly Enkompass).

.2 [Electrical distribution manufacturers:]

.1 Eaton.

.2 Schneider Electric.

2.2 STUDIES

.1 The contractor shall furnish an Arc Flash Hazard Analysis Study per CSA Z462, reference Section 4.1.8.2.2, 4.3.3.

2.3 DATA COLLECTION

.1 Contractor shall furnish all data as required by the power system studies. The Engineer performing arc flash hazard analysis studies shall furnish the Contractor with a listing of required data immediately after award of the contract. The Contractor shall expedite collection of the data to assure completion of the studies as required for final approval of the distribution equipment shop drawings and/or prior to the release of the equipment for manufacturing.

.2 Source combination may include present and future motors and generators.

.3 If applicable, include fault contribution of existing motors in the study. The Contractor shall obtain required existing equipment data, if necessary, to satisfy the study requirements.

2.4 ARC FLASH HAZARD ANALYSIS

.1 The arc flash hazard analysis shall be performed according to the IEEE 1584 equations that are presented in CSA Z462 Annex D.

.2 The flash protection boundary and the incident energy shall be calculated at all significant locations in the electrical distribution system (switchboards, switchgear, panelboards, and splitters) where work could be performed on energized parts.

.3 The Arc-Flash Hazard Analysis shall include all significant locations in 240 volt and 208 volt systems fed from transformers equal to or greater than 112.5 kVA where work could be performed on energized parts.

.4 Safe working distances shall be based upon the calculated arc flash boundary considering an incident energy of 1.2 calories per square centimetre.

.5 When appropriate, the short circuit calculations and the clearing times of the phase overcurrent devices will be retrieved from the short-circuit and coordination study model. Ground overcurrent relays should not be taken into consideration when determining the clearing time when performing incident energy calculations.

.6 The short-circuit calculations and the corresponding incident energy calculations for multiple system scenarios must be compared and the greatest incident energy must be uniquely reported for each equipment location. Calculations must be performed to represent the maximum and minimum contributions of fault current magnitude for all normal and emergency operating conditions. The minimum calculation will assume that the utility contribution is at a minimum and will assume a minimum motor contribution (all motors off). Conversely, the maximum calculation will assume a maximum contribution from the utility and will assume the maximum amount of motors to be

operating. Calculations shall take into consideration the parallel operation of synchronous generators with the electric utility, where applicable.

.7 The incident energy calculations must consider the accumulation of energy over time when performing arc flash calculations on buses with multiple sources. Iterative calculations must take into account the changing current contributions, as the sources are interrupted or decremented with time. Fault contribution from motors and generators should be decremented as follows:

.1 Fault contribution from induction motors should not be considered beyond 3-5 cycles.

.8 Fault contribution from synchronous motors and generators should be decayed to match the actual decrement of each as closely as possible (e.g. contributions from permanent magnet generators will typically decay from 10 per unit to 3 per unit after 10 cycles).

.9 For each equipment location with a separately enclosed main device (where there is adequate separation between the line side terminals of the main protective device and the work location), calculations for incident energy and flash protection boundary shall include both the line and load side of the main breaker.

.10 When performing incident energy calculations on the line side of a main breaker (as required per above), the line side and load side contributions must be included in the fault calculation.

.11 Mis-coordination should be checked amongst all devices within the branch containing the immediate protective device upstream of the calculation location and the calculation should utilize the fastest device to compute the incident energy for the corresponding location.

.12 Arc Flash calculations shall be based on actual overcurrent protective device clearing time.

.13 Maximum clearing time will be capped at 2 seconds based on IEEE 1584.

.14 Where it is not physically possible to move outside of the flash protection boundary in less than 2 seconds during an arc flash event, a maximum clearing time based on the specific location shall be utilized.

2.5 REPORT SECTIONS

.1 Incident energy and flash protection boundary calculations:

.1 Arcing fault magnitude.

.2 Protective device clearing time.

.3 Duration of arc.

.4 Arc flash boundary.

.5 Working distance.

.6 Incident energy.

.7 Hazard Risk Category.

.8 Recommendations for arc flash energy reduction.

PART 3 - EXECUTION

3.1 FIELD ADJUSTMENT

.1 Adjust relay and protective device settings according to the recommended settings table provided by the coordination study. Field adjustments to be completed by the engineering service division of the equipment manufacturer under the Startup and Acceptance Testing contract portion.

.2 Make minor modifications to equipment as required to accomplish conformance with short circuit and protective device coordination studies.

.3 Notify Owner in writing of any required major equipment modifications.

3.2 ARC FLASH WARNING LABELS

.1 The contractor of the Arc Flash Hazard Analysis shall provide a 90 mm (3.5 in) by 125 mm (5 in) thermal transfer type label of high adhesion polyester for each work location analyzed.

.2 All labels will be based on recommended overcurrent device settings and will be provided after the results of the analysis have been presented to the owner and after any system changes, upgrades or modifications have been incorporated in the system.

.3 The label shall include the following information, at a minimum:

.1 Location designation.

.2 Nominal voltage.

.3 Flash protection boundary.

.4 Hazard risk category.

.5 Incident energy.

.6 Working distance.

.7 Engineering firm and issue date.

.8 Labels shall be machine printed, with no field markings.

.4 Arc flash labels shall be provided in the following manner and all labels shall be based on recommended overcurrent device settings.

.1 For each 600 volt, and applicable 208 volt panelboard, one arc flash label shall be provided.

.2 For each motor control centre, one arc flash label shall be provided.

.3 For each low voltage switchboard, one arc flash label shall be provided.

.4 For each switchgear, one flash label shall be provided.

.5 For medium voltage switches one arc flash label shall be provided.

.5 Arc Flash Warning Label General Instructions:

.1 Only qualified electricians who recognize and avoid the electrical and Arc Flash hazards are allowed to place the arc flash warning labels.

.2 Electricians should wear suitable PPE, such as electrical safety boots, Safety Glasses, etc. while performing labeling.

.3 Generally, arc flash label shall be put on a prominent pre-cleaned place on the front of the electrical equipment (such as switchgear, panel, disconnect switch, generator output breaker). Label should be visible and readable, displayed horizontally, attached flatly and securely, and not allowed to cover other signs or labels on the equipment.

.4 Under the special request of the client, labels could be put on the back of the panel door when the panel is located in clean and finished spaces such as an office area.

.5 When putting a label on small equipment with no space labeling on the wall just beside the equipment is allowed.

.6 Special request may be attached to this General Instruction. For examples, more than one identical label is applied for large equipment; different labels could be applied for different sections of one equipment; for a splitter with several disconnect switches only one label is placed on the splitter for this group.

.7 Take the pictures for each label to indicate both names of the label and equipment and labeling area of the equipment. Email these pictures to the Consultant for quality control and record.

END OF SECTION

PART 1 - GENERAL

1.1 SECTION INCLUDES

.1 Electrical connections to equipment specified in other sections.

1.2 RELATED REQUIREMENTS

.1 Division 08 – Openings.

.2 Division 11 – Equipment.

.3 Division 22 – Plumbing.

.4 Division 23 – Heating, Ventilating, and Air Conditioning.

1.3 REFERENCES

.1 NEMA WD 1 - General Colour Requirements for Wiring Devices.

.2 NEMA WD 6 - Wiring Devices - Dimensional Requirements.

1.4 COORDINATION

.1 Coordinate work to Section 01.

.2 Obtain and review shop drawings, product data, and manufacturer's instructions for equipment provided under other sections.

.3 Determine connection locations and requirements.

.4 Sequence rough-in of electrical connections to coordinate with installation schedule for equipment.

.5 Sequence electrical connections to coordinate with start-up schedule for equipment.

1.5 SUBMITTALS

.1 Submit to Section 01.

.2 Product Data: Provide wiring device manufacturer's catalogue information showing dimensions, configurations, and construction.

.3 Manufacturer's Instructions: Indicate application conditions and limitations of use stipulated by Product testing agency specified under Regulatory Requirements. Include instructions for storage, handling, protection, examination, preparation, installation, and starting of Product.

1.6 REGULATORY REQUIREMENTS

.1 Provide products listed and classified by testing firm acceptable to authority having jurisdiction as suitable for purpose specified and shown.

PART 2 - PRODUCTS

2.1 COMMON MOTOR REQUIREMENTS

.1 Motors up to and including 1/3 HP, shall be 1 phase, 60 Hz, 120 volts.

.2 Motors 1/2 HP and above shall be 3 phase, 60 Hz, 575 volts or 208 volts.

2.2 CORDS AND CAPS

.1 Attachment Plug Construction: Conform to NEMA WD 1.

.2 Configuration: NEMA WD 6; match receptacle configuration at outlet provided for equipment.

.3 Size: Suitable for connected load of equipment, length of cord, and rating of branch circuit overcurrent protection.

PART 3 - EXECUTION

3.1 WIRING OF EQUIPMENT PROVIDED UNDER OTHER DIVISIONS

.1 Use the following procedure with regard to wiring of motors and equipment provided under other Divisions.

.2 The following equipment shall be responsibility of the trade supplying the equipment unless otherwise noted, in accordance with the requirements laid out in the individual section, or this division:

.1 Motors.

.2 Starters.

.3 Variable Frequency Drives.

.4 Motor Control Centres.

.5 Control wiring.

.3 In every instance, install starter, motor control centre, variable frequency drivers (VFD), etc. and wire to line side of the starter, the Motor Control Centre, or VFD. Extend wiring from starter, motor control centre or VFD to motor as indicated.

.4 Provide all wiring for starters and VFD's from supply to starter to VFD and to motor. Coordinate requirements with the appropriate trade.

.5 Provide 500 mm of liquid tight flexible metal conduit for final connection to motor. Provide disconnect switches where required by code, and as indicated on the drawings.

.6 Where individual starters and controls are grouped together provide a panel for mounting this equipment. Provide a feeder, main fused disconnect and a splitter of adequate size and capacity and wire to line side of the starters on this panel and from starters to motors.

.7 Equipment, General

.1 Ascertain exact locations of starters, motor control centres, motors, etc. from drawings and coordinate exact locations with the supplying trade.

.2 Control wiring shall be the responsibility of the supplying trade.

.1 Control wiring shall be in accordance with Section 26 05 19, and Section 26 05 23.

.2 Control wiring shall be installed in conduit in accordance with Section 26 05 33.13.

.8 Conveying Equipment (e.g. Elevators): in accordance with Section 26 05 83.14.

.9 Plumbing Equipment

.1 Ascertain exact locations of starters, motor control centres, motors, infra-red plumbing fixture controls from Mechanical Drawings and coordinate exact locations with plumbing trade.

.2 Provide branch circuit wiring and an outlet for each infra-red plumbing fixture control.

.3 Control wiring shall be the responsibility of the plumbing trade, as described above.

.10 HVAC Equipment

.1 Ascertain exact locations of starters, motor control centres, motors, motorized dampers, VAV boxes, and heating control valves from HVAC drawings and coordinate exact locations with HVAC Division.

.2 In the case of unit heaters, reheat coils and cabinet unit heaters, terminate wiring on terminals provided. Control wiring, thermostats, or other control devices shall be the responsibility of the HVAC trade, as described above.

.3 Provide branch circuit wiring and an outlet for each motorized damper, variable air volume (VAV) box, or heating control valve. Control wiring shall be the responsibility of the HVAC trade, as described above.

3.2 PROVISIONS FOR BUILDING MANAGEMENT SYSTEM

.1 Refer to drawing notes for requirements.

.2 BMS work is under the work of Mechanical Divisions. From equipment as noted on drawings, extend suitable wiring in conduit from equipment contacts to designated BMS panel swerving area, terminating wiring and conduit in a junction box. Leave wiring un-terminated with slack coiled length of minimum 2 m (6’) long. Clearly label junction box and wiring end for termination onto BMS panel by respective Mechanical Trade.

.3 Coordinate work with Mechanical Division Contractor.

3.3 EXAMINATION

.1 Verify that equipment is ready for electrical connection, wiring, and energization.

3.4 ELECTRICAL CONNECTIONS

.1 Make electrical connections to equipment manufacturer's instructions.

.2 Make conduit connections to equipment using flexible conduit. Use liquid-tight flexible conduit with watertight connectors in damp or wet locations.

.3 Make wiring connections using wire and cable with insulation suitable for temperatures encountered in heat producing equipment.

.4 Provide receptacle outlet where connection with attachment plug is indicated. Provide cord and cap where field-supplied attachment plug is indicated.

.5 Provide suitable strain-relief clamps and fittings for cord connections at outlet boxes and equipment connection boxes.

.6 Install disconnect switches, controllers, control stations, and control devices as indicated.

.7 Modify equipment control wiring with terminal block jumpers as indicated.

.8 Provide interconnecting conduit and wiring between devices and equipment where indicated.

.9 Coolers and Freezers: Cut and seal conduit openings in freezer and cooler walls, floor, and ceilings.

3.5 GROUNDING AND BONDING

.1 Provide required grounding and bonding work in accordance with the drawings and in accordance with requirements of governing authorities, including the OESC. Review grounding requirements of project areas with specific requirements of use of areas as outlined in Contract Documents. Review exact requirements with Consultant prior to start of work.

.2 Review medical equipment grounding with equipment vendor and provide requirements to suit.

.3 Throughout the renovated areas, solidly ground and bond the system equipment and make all required grounding connections to all new electrical devices and apparatus. Ground conductors shall be insulated copper wire connected with approved fittings in accordance with the OESC.

.4 All ground connections in slab shall be made using OESC approved welded copper connections - Cadweld as supplied by Erico Products or approved equal.

.5 Service conductors exceeding 400 amperes shall be provided with minimum No. 3/0 AWG grounding conductors, unless otherwise noted.

.6 Do not use conduit systems as ground conductors in patient care areas or in areas as per local governing electrical code requirements.

.7 Ground and bond telecommunication components as required.

.8 Provide conductors as sized on drawings and in accordance with OESC requirements, but which shall be of size no smaller than the requirements specified herein this article or on drawings.

END OF SECTION

PART 1 - GENERAL

1.1 SECTION INCLUDES

.1 Occupancy and Vacancy sensors.

.2 Power packs, and auxiliary relays, momentary switches.

.3 Timers.

.4 Daylight harvesting photo sensors.

.5 Emergency lighting control units.

1.2 PRODUCTS INSTALLED BUT NOT SUPPLIED UNDER THIS SECTION

.1 Line voltage manual control devices, as described in Section 26 27 26 – Wiring Devices.

1.3 RELATED REQUIREMENTS

.1 Section 26 08 50 – Commissioning of Lighting.

.2 Section 26 27 26 – Wiring Devices.

.3 Section 26 51 19 – LED Interior Lighting.

.4 Section 26 56 19 – LED Exterior Lighting.

1.4 REFERENCES

.1 CSA Group:

.1 CSA C22.1:24, Canadian Electrical Code, Part 1 (26th Edition), Safety Standard for Electrical Installations.

.2 Ontario Electrical Safety Code (29th edition/2024).

.3 CSA C22.2 No. 42 – General Use Receptacles.

.4 CSA C22.2 No. 42.1 – Cover Plates for Flush Mounted Wiring Devices.

.5 CSA C22.2 No. 141 – Emergency lighting equipment.

.6 CSA C22.2 No. 184 – Solid-State Lighting Controls.

.7 CSA C22.2 No. 184.1 – Solid State Dimming Controls.

.2 Ontario Building Code.

.3 UL 924 - Standard for Safety of Emergency Lighting and Power Equipment.

.4 UL 2043 – Standard for fire test for heat and visible smoke release for discrete products and their accessories installed in air-handling spaces.

.5 NEMA WD 7 – Occupancy motion sensors standard.

1.5 SUBMITTALS

.1 In accordance with Section 01 33 00.

.2 Product Data:

.1 Submit manufacturer’s descriptive literature and product specifications for each product.

.2 Manufacturer’s product drawings.

.3 Manufacturer’s installation instructions.

.3 Where the lighting controls include the option for custom engraving, or custom touchscreen user interfaces on control devices, switches, or scene controllers, the Contractor is to submit proposed engraving/labelling/graphics as part of the shop drawing submittal, for review by the Owner.

1.6 CLOSEOUT SUBMITTALS

.1 Documentation of all lighting control system setpoints, sensor sensitivities, occupancy sensor timeouts, and as-programmed sequences of operation to aid in future troubleshooting.

.2 Lighting controls functional test report.

1.7 QUALITY ASSURANCE

.1 Manufacturer Qualifications: Products free of defects in material and workmanship.

1.8 WARRANTY

.1 Product is warranted free of defects in material and workmanship.

.2 Product is warranted to perform the intended function within design limits.

PART 2 - PRODUCTS

2.1 MANUFACTURERS

.1 Wattstopper DLM (Basis of Design).

.2 Acuity Brands Lighting nLight/Sensorswitch.

.3 Lutron Vive.

.4 Cooper Lighting Solutions Greengate DVLP.

.5 Leviton.

2.2 GENERAL REQUIREMENTS OF ALL DEVICES

.1 Manufactured by an ISO 9002 certified manufacturing facility and shall have a defect rate of less than 1/3 of 1 per cent.

.2 Five year warranty and CUL listed.

.3 All devices specified shall have the ability to be connected on a digital loop and programmed separately.

.4 All user input devices with two or more buttons have the ability to be programmed as multiple load switching or single load dimming.

.5 The devices have the ability to be connected as a single room, and also scalable to an enterprise solution.

2.3 OCCUPANCY AND VACANCY SENSORS

.1 General:

.1 Sensors using passive infrared, ultrasonic, microphonic, and multi-technology adaptive technology.

.2 Configurable sensor timeouts.

.3 Rating: 24 VDC input voltage.

.4 Environmental:

.1 Operating Temperature Range: 0 degrees C to 40 degrees C

.2 Relative Humidity: 5 per cent to 95 per cent non-condensing.

.5 Sensors shall connect with load controller via cat5e cabling with RJ45 terminations.

.2 Dual Technology Wall Switch Sensor, 24V

.1 Available in one or two button configuration.

.2 Wattstopper LMDW-100 series (Basis of Design).

.3 Utilize a dual sensing verification principle for coordination between ultrasonic and Passive Infrared (PIR) Technologies to reduce likelihood of false triggering.

.4 Adjustable sensitivity, PIR 10-100%, Ultrasonic 10-100% in increments of 10%.

.5 Coverage up to 25 ft diameter for minor motion, and 35 ft diameter with a field view of 180 degrees.

.6 Adjustable automatic-ON or manual-ON operation.

.7 Adjustable detection and retrigger technology (PIR/Ultrasonic/both/either).

.8 Sensor shall have an adjustable time delay.

.9 Sensor shall fit in a single gang box with a typical decora faceplate.

.3 Dual Technology Ceiling Mounted Sensor, 24V

.1 Wattstopper LMDC-100 series (Basis of Design).

.2 Adjustable sensitivity, PIR 10-100%, Ultrasonic 10-100% in increments of 10%.

.3 Coverage up to 20 ft diameter for minor motion, and 30 ft diameter with a field view of 360 degrees.

.4 Adjustable detection and retrigger technology (PIR/Ultrasonic/both/either).

.5 Sensor shall have an adjustable time delay.

.6 Sensor shall fit in a 1.5 in deep octagon box.

.4 Dual Technology Corner Mount Sensor, 24V

.1 Ceiling or wall mounted as directed.

.2 Wattstopper LMDX-100 series (Basis of Design).

.3 Adjustable sensitivity, PIR 10-100%, Ultrasonic 10-100% in increments of 10%.

.4 Coverage up to 25 ft diameter for minor motion, and 40 ft diameter with a field view of 90 degrees.

.5 Adjustable detection and retrigger technology (PIR/Ultrasonic/both/either).

.6 Sensor shall have an adjustable time delay.

.7 Sensor shall fit in a 4 in square box with mounting plate and base.

2.4 DAYLIGHT HARVESTING PHOTO SENSORS

.1 Closed loop photosensor

.1 Ceiling mounted, recessed or surface (with bracket).

.2 Wattstopper LMLS-400 series (Basis of Design).

.3 Spatial response: 100 degrees.

.4 Sensor suitable between 1-1,553 foot candles.

.5 Environmental:

.1 Operating Temperature Range: 0 degrees C to 55 degrees C

.2 Relative Humidity: 0 per cent to 95 per cent non-condensing.

.2 Open loop photosensor

.1 Ceiling or wall mounted, recessed or surface (with bracket).

.2 Wattstopper LMLS-500 series (Basis of Design).

.3 Spatial response: 60 degrees.

.4 Sensor suitable between 1-1,500 foot candles.

.5 Environmental:

.1 Operating Temperature Range: 0 degrees C to 55 degrees C

.2 Relative Humidity: 0 per cent to 95 per cent non-condensing.

2.5 DECORATOR LOW VOLTAGE MOMENTARY SWITCHES

.1 Wattstopper LMSW-100 series (Basis of Design).

.2 Suitable for switching, dimming and scene selection.

.3 Available in 1, 2, 3, 4, 5, and 8 button configurations.

.4 Two RJ45 ports for daisy chaining multiple devices.

.5 Switch shall fit in a single gang box with a typical decora faceplate.

.6 Environmental:

.1 Operating Temperature Range: 0 degrees C to 55 degrees C

.2 Relative Humidity: 5 per cent to 95 per cent non-condensing.

2.6 POWER PACKS

.1 General:

.1 Power packs shall have the ability to be daisy chained on one digital loop.

.2 Internal relay controlling up to 20A for 120/277VAC or 15A for 347VAC ballast loads total per power pack.

.3 Power pack shall be available in 0-10V or forward phase dimming (120/277VAC only) technology.

.4 Models of 0-10V dimming technology shall have the option for one, two or three control channels.

.5 Power packs are digital and can be configured for pre-set scenes.

.6 Wattstopper LMRC-210 series (0-10V or switched) (Basis of Design)

.7 Wattstopper LMRC-220 series (forward phase) (Basis of Design)

.8 Power pack shall utilize Zero Crossing Circuitry to protect from the effects of inrush current and increase product longevity.

.9 Power pack shall be mounted on a 4 in square junction box and is plenum rated for ceiling installation.

.10 Power packs shall at minimum meet the following environmental specifications:

.1 Operating Temperature Range: 0 degrees C to 55 degrees C

.2 Relative Humidity: 5 per cent to 95 per cent non-condensing

2.7 PLUG LOAD CONTROLLER

.1 Plug load controllers shall have the ability to be daisy chained on one digital loop.

.2 Internal relay controlling up to 20A for 120VAC per power pack.

.3 Wattstopper LMPL-201 series (Basis of Design)

.4 Power pack shall utilize Zero Crossing Circuitry to protect from the effects of inrush current and increase product longevity.

.5 Power pack shall be mounted on a 4 in square junction box and is plenum rated for ceiling installation.

.6 Power packs shall at minimum meet the following environmental specifications:

.1 Operating Temperature Range: 0 degrees C to 55 degrees C

.2 Relative Humidity: 5 per cent to 95 per cent non-condensing

2.8 TIMER

.1 Timer used to automatically switch lighting using time of day scheduling, independent of BAS or network controller.

.2 Supports astronomical, time-based, and photocell based event types.

.3 Connected by cat5e cable to sensors or controllers as part of the digital loop.

.4 Complete with 120V input, one LMPB-100 power booster and internal barrier.

.5 Can be installed in plenum space or wall mount in electrical room.

.6 Wattstopper LMZC-300 series (Basis of Design)

2.9 EMERGENCY LIGHTING CONTROL UNIT

.1 Description:

.1 Sequence of Operation: activate emergency lighting in the event of loss of normal utility power, regardless of control status of the luminaire.

.2 Provide all required functionality to allow any standard lighting control device to control emergency lighting in conjunction with normal lighting in any area within a building.

.2 Device shall be listed to UL 924 to meet the intent of Ontario Building Code for “fail-safe operation”, and be approved for use in Canada.

.3 Wattstopper ELCU-200 series (Basis of Design).

.4 Mounting: Able to fit in a standard junction box knockout.

.5 Complete with remote test switch.

.6 Sequence of Operation: automatically switch emergency lighting on and off as normal lighting is switched. When normal power is not available, force and hold emergency lighting on regardless of the state of any external control device until normal power is restored.

.7 UL, cUL listed Emergency Lighting and Equipment; five year warranty.

2.10 SEQUENCES OF OPERATION

.1 To Section 26 06 50.19.

.2 [Vacancy Sensor Operation: Manual On, Manual/Auto Off.]

.3 [In accordance with ASHRAE 90.1-2013].

PART 3 - EXECUTION

3.1 INSTALLATION

.1 In accordance with manufacturer's instructions.

.2 Low voltage lighting control cabling shall be cat5e

.3 It shall be the contractor's responsibility to locate and aim sensors in the correct location required for complete and proper volumetric coverage within the range of coverage(s) of controlled areas per the manufacturer's recommendations. Rooms shall have 90 per cent to 100 per cent coverage to completely cover the controlled area to accommodate all occupancy habits of single or multiple occupants at any location within the room(s). The locations and quantities of sensors shown on the drawings are diagrammatic and indicate only the rooms which are to be provided with sensors. The contractor shall provide additional sensors if required to properly and completely cover the respective room.

.4 It is the contractor's responsibility to arrange a pre-installation meeting with manufacturer's factory authorized representative, at Owner's facility, to verify placement of sensors and installation criteria.

.5 Proper judgement must be exercised in executing the installation so as to ensure the best possible installation in the available space and to overcome local difficulties due to space limitations or interference of structural components.

.6 Install manual control devices and sensors in accordance with manufacturer's instructions for Vacancy Operation.

3.2 SYSTEM STARTUP

.1 The lighting controls manufacturer's representative shall conduct system startup and submit startup report.

3.3 SITE TESTS AND INSPECTIONS

.1 The lighting controls manufacturer's representative and Contractor shall conduct functional testing and provide report as described in ASHRAE 90.1-2013:

.1 Lighting control devices and control systems shall be tested to ensure that control hardware and software are calibrated, adjusted, programmed, and in proper working condition in accordance with the construction documents and manufacturer's installation instructions.

.2 When occupant sensors, time switches, programmable schedule controls, or photosensors are installed, at a minimum, the following procedures shall be performed:

.1 Occupant Sensors

.1 Certify that the sensor has been located and aimed in accordance with manufacturer recommendations.

.2 For projects with up to seven (7) occupancy sensors, all occupancy sensors shall be tested.

.3 For projects with more than seven (7) occupancy sensors, testing shall be done for each unique combination of sensor type and space geometry.

.4 For each sensor to be tested, verify the following:

.1 Status indicator (as applicable) operates correctly.

.2 Controlled lights turn off or dim down to the specified level within the required time (20 minutes, or as noted), as applicable to the space type.

.3 For auto-on occupant sensors (occupancy mode), the lights turn on to the permitted level when someone enters the space.

.4 For manual-on sensors (vacancy mode), the lights turn on only when manually activated.

.5 The lights are not incorrectly turned on by movement in nearby areas or by HVAC operation.

.2 Automatic Time Switches

.1 Confirm that the automatic time switch control is programmed with appropriate weekday, weekend, and holiday (as applicable) schedules.

.2 Document for the owner automatic time switch programming, including weekday, weekend, and holiday schedules, as well as all setup and preference program settings.

.3 Verify that correct time and date are properly set in the time switch.

.4 Simulate occupied condition. Verify and document the following:

.1 All lights can be turned on and off by their respective area control switch.

.2 The switch only operates lighting in the enclosed space in which the switch is located.

.5 Simulate unoccupied condition. Verify and document the following:

.1 All non-exempt lighting turns off.

.2 Manual override switch allows only the lights in the enclosed space where the override switch is located to turn on or remain on until the next scheduled shut off occurs.

.3 Daylight Controls

.1 All control devices (photocontrols) have been properly located, field-calibrated, and set for appropriate set points and threshold light levels.

.2 Daylight controlled lighting loads adjust to appropriate light levels in response to available daylight.

.3 The location where calibration adjustments are made is readily accessible only to authorized personnel.

.3 The individual(s) responsible for the functional testing shall not be directly involved in either the design or construction of the project and shall provide documentation certifying that the installed lighting controls meet or exceed all documented performance criteria.

.2 Test lighting controls with fire alarm system in accordance with Section 28 08 46 and Section 28 46 51.

.3 Commissioning:

.1 [Upon completion of the installation, the system shall be completely commissioned to verify all adjustments and sensor placement to ensure a trouble-free lighting control system.]

.2 [Submit commissioning report to the Consultant and the commissioning authority for review.]

.3 [Provide the Consultant and Commissioning Authority with ten working days written notice of the scheduled commissioning date.]

3.4 TRAINING

.1 Provide training session of minimum 4 hours duration in accordance with Section 01 79 00.

END OF SECTION

PART 1 - GENERAL

1.1 SUMMARY

.1 This specification provides the technical requirements for the design manufacture and test of dry-type medium voltage substation transformers. Provide all accessories and equipment as described herein and shown on Project Drawings as necessary for a complete installation.

1.2 RELATED REQUIREMENTS

.1 [Section 26 24 13 – Switchboards: close-coupled equipment.]

1.3 SUBMITTALS

.1 The manufacturer shall provide the following information for review and evaluation by the Engineer:

.1 Shop Drawings showing outline, nameplate information and connection diagrams.

.2 Manufacturer shall provide final, as- built drawings. Installation, Operation and Maintenance manuals shall also be supplied.

1.4 REFERENCE STANDARDS

.1 The ventilated dry-type transformers and protection devices in this specification are designed and manufactured according to latest revision of the following standards.

.1 CSA C9:17 (R2022), Dry-type transformers.

.2 CAN/CSA C22.2 No. 47-13 (R2023), Air-cooled transformers (dry type).

.3 CAN/CSA-C802.2-18 (R2023), Test method and minimum efficiency values for dry-type transformers.

.4 DOE 10 CFR Part 431 Efficiency Standards; published in the Federal Register on April 18, 2013.

.5 IEEE C57.12.01 - General Requirements for Distribution, Power and Regulating Transformers.

.6 IEEE C57.12. 91-2020 - IEEE Standard Test Code for Dry-Type Distribution and Power Transformers.

.7 IEEE C57.110-2018 - IEEE Recommended Practice for Establishing Liquid Immersed and Dry-Type Power and Distribution Transformer Capability when Supplying Nonsinusoidal Load Currents: for non-linear loads.

.8 NRCan Energy Efficiency Regulations (SOR/2016-311 amendment 14).

.9 O. Reg. 404/12: Ontario Regulation for Energy and Water Efficiency - Appliances and Products.

1.5 SUBMITTALS

.1 Submittals for Consultant’s review:

.1 Outline, nameplate, and connection diagram drawings.

.2 Electronic 3D Models of outline drawings.

.3 Installation/Operation/Maintenance Manual

.4 Certified Production Test Report(s) containing minimum information per ANSI C57.12.91.

.2 [Upon receipt of Consultant’s review, submit shop drawings to the local electrical utility for their review and approval.]

1.6 QUALITY ASSURANCE

.1 The manufacturer shall have a well-documented quality assurance program, which includes procedures for all activities in order entry, design, material procurement, manufacturing processes, testing, shipping, and post shipment.

.2 The manufacturer shall have specialized in the design, manufacture, and assembly of dry-type distribution transformers for a minimum of 10 years.

.3 The transformer shall be manufactured by a company, which is certified ISO 9001:2015, for design and manufacture of Power Dry Type Transformers.

.4 The test floor shall have documented calibration program. All equipment shall receive regular calibrations. Records of all equipment calibration shall be made available to the Buyer upon request.

.5 Measured values of electric power, voltage, current, resistance and temperatures are used in the calculations of reported data. To ensure sufficient accuracy in the measured and calculated date the test system accuracy requirements listed in ANSI C57.12.01 Table 3 shall be met as a minimum.

1.7 DELIVERY, STORAGE, AND HANDLING

.1 Handle and store equipment in accordance with manufacturer's Installation and Maintenance Manuals. One (1) copy of this document to be provided with the equipment at time of shipment.

1.8 WARRANTY

.1 Equipment manufacturer warrants that all goods supplied are free of non-conformities in workmanship and materials for one year from date of shipment.

PART 2 - PRODUCTS

2.1 MANUFACTURERS

.1 Manufacturer List:

.1 Hammond Power Solutions (basis of design).

.2 Acme.

.3 Atlas.

.4 Delta.

.5 Rex Power Magnetics.

.2 Substitutions: Other manufacturers considered upon request submitted by bidder to the Consultant during the tender period.

2.2 TECHNICAL REQUIREMENTS

.1 Construction

.1 The transformer shall be of dry type Vacuum Pressure Impregnated (VPI) construction, dry type technology and shall be mounted in a suitably ventilated outdoor NEMA 3RE enclosure supplied with internal baffles and filtered louvres.

.2 Primary terminations shall be close coupled to High Voltage outdoor metal enclosed switchgear. Transformer manufacturer shall co-ordinate with High Voltage outdoor metal enclosed switchgear during design and drawing stage.

.3 Secondary terminations shall be cable type for connection to indoor switchboard.

.4 Sound levels shall be min 65 dB; -3 dB below CSA standard sound levels.

.2 Core Design

.1 Transformer core shall be manufactured from quality non-aging, cold rolled, fully processed silicon steel laminations. Cores are to be precisely cut to close tolerances to eliminate burrs and improve performance. They will be step-lap, fully mitered construction for optimum energy efficiency and low noise level. Cores are to be carefully assembled and rigidly held secure with structural steel clamps to minimize gaps.

.3 Temperature Rise

.1 The transformer shall be design for a temperature rise of 150°C with and shall be built utilizing Class 220°C insulation, regardless of the temperature rise specified. The transformer shall not exceed the specified temperature rise when the unit is operated continuously at full nameplate rating. The transformer shall be capable of carrying 100% of the nameplate rating in a 30°C average, not to exceed 40°C maximum ambient in any 24 hour period.

.4 Coil Design

.1 The high voltage and low voltage windings shall be constructed using copper conductors. The conductors shall be insulated with 220°C insulation.

.1 Transformer primary winding shall have four 2-1/2 percent full capacity taps; two above and two below rated nominal voltage. No load tap connections shall be made by re-connectable links on the face of the primary winding and shall be located behind removable panels on the front of transformer enclosure. Taps shall be for de-energized operation only.

.5 Core and Coil Assembly

.1 After installation of windings on core and stacking of the top yoke core steel, core and coil assembly is to be secured with a rigid frame. Primary and secondary coordination bus assemblies, as required for connection to associated switchgear are to be of welded or bolted construction.

.6 Vacuum Pressure Encapsulation Process

.1 Each coil assembly shall be vacuum pressure impregnated in polyester varnish. The VPI process shall consist of two (2) cycles VPI on entire HV and LV coil assembly. This shall effectively impregnate the entire coil assembly that results in a unit which is virtually impermeable to moisture, dust, dirt, salt air and other industrial contaminants.

.7 Dielectric Withstand

.1 The impulse rating of the transformer must equal or exceed the basic impulse level specified by [ANSI] [Table 9 of CSA C9] for the applicable voltage class. The basic impulse level shall be inherent to the winding design and is to be obtained without the use of supplemental surge arrestors.

.2 Basic Impulse rating of the transformer shall be coordinated with the upstream medium voltage switchgear BIL, but no less than the following values based on the transformer primary voltage:

.1 Less than 1.2 kV: 10 kV BIL.

.2 4.16 kV: [30 kV BIL] [60 kV BIL].

.3 13.8 kV: 95 kV BIL.

.4 27.6 kV: 125 kV BIL.

.5 34.5 kV: 150 kV BIL.

.6 44 kV: 200 kV BIL.

.8 Vibration Isolation

.1 The transformer shall have in shear vibration isolation system to provide minimum static defection of 10 mm.

.9 Enclosure

.1 The enclosure shall be constructed of heavy gauge sheet steel and shall be finished in ANSI 61 paint color applied using an electrostatically deposited dry powder paint system. All ventilating openings shall be in accordance with NEMA and NEC standards for ventilated enclosures. The base of the enclosure shall be furnished with ground pads located on opposite diagonal corners. The core shall be visibly grounded to the enclosure frame by means of a flexible grounding strap.

.2 Outdoor NEMA 3RE protection including internal baffles and filtered louvres to provide a degree of protections against rain, sleet, and external ice construction.

.3 Enclosure shall incorporate factory installed strip heater circuit for operation to repel moisture and condensation when transformer is not energized.

.10 Nameplate

.1 Transformer shall be furnished with a non-corrosive diagrammatic nameplate per ANSI C57.12.01, permanently attached with non-corrosive hardware. The diagrammatic nameplate shall include the name of the transformer supplier as well as the location where the transformer was manufactured and tested.

.2 The nameplate shall also indicate certification to CAN/CSA C22.2 No. 47.

2.3 ACCESSORIES

.1 Transformer accessories shall include:

.1 Diagrammatic instruction nameplate.

.2 Removable hinged enclosure doors front and rear for access.

.3 Dial type thermometer.

.4 In shear vibration isolation mounted to core and coil; minimum static deflection 10 mm.

2.4 SOURCE QUALITY CONTROL

.1 After completion, each transformer shall undergo the following routine production tests per ANSI C57.12.01 and ANSI C57.12.91. Testing shall be accomplished using calibrated test equipment, which have recorded accuracy traceable to National Institute of Standards Technologies (NIST). Certification of Calibration shall be provided with test reports if requested.

.1 Megger.

.2 Ratio.

.3 Resistance.

.4 Phase relation.

.5 Load Loss, Impedance and Regulation.

.6 No Load Loss and Excitation Current.

.7 Applied Potential Test.

.8 Induced Potential Test.

.2 Provide certified production test reports for all manufactured transformers.

PART 3 - EXECUTION

3.1 EXAMINATION

.1 [Review the plans and the site conditions, and sequence the construction so that the transformer can be delivered to site based the available openings. Where circumstances require, supply transformer coils separate from the enclosure for onsite assembly.]

.2 Verification of Conditions: verify that conditions of substrate previously installed under other Sections or Contracts are acceptable for transformers installation in accordance with manufacturer's written instructions.

.1 Visually inspect substrate in presence of Owner.

.2 Inform Consultant of unacceptable conditions immediately upon discovery.

.3 Proceed with installation only after unacceptable conditions have been remedied and after receipt of written approval to proceed from the Owner.

3.2 INSTALLATION

.1 Locate, install, and ground transformers in accordance with manufacturer's instructions.

.2 Set and secure transformers in place, rigid plumb and square.

.3 Connect primary terminals to high voltage circuit, or bussing of close coupled equipment, as applicable.

.4 Connect secondary terminals to secondary feeder, or bussing of close coupled equipment, as applicable.

.5 Use flexible conduit to make connections to transformer.

.6 Energize transformers and check secondary no-load voltage.

.7 Adjust primary taps as necessary to produce rated secondary voltage at no-load.

.8 Wire alarm contacts on winding temperature indicator to sound alarm when excessive temperature reached.

.9 Locate and install cooling fans.

.1 Connect thermostat control.

.2 Connect sequence contacts of temperature indicator:

.1 First contact closure: start fan.

.2 Second contact closure: sound alarm.

.3 Third contact closure: trip secondary breaker.

.10 Use torque wrench to adjust internal connections in accordance with manufacturers' recommended values.

.11 Check transformer for dryness before putting it into service and if it has not been energized for some considerable time.

3.3 FIELD QUALITY CONTROL

.1 Perform tests in accordance with Section 26 08 00.

.2 Energize transformers and apply incremental loads:

.1 0% for 4 hours.

.2 10% for next 1 hour.

.3 25% for next 2 hours.

.4 50% for next 3 hours.

.5 Full load.

.3 At each load change, check and record enclosure, ventilating air, winding, and ambient temperatures.

.4 Adjust cooling fan controls if required.

3.4 CLEANING

.1 Progress Cleaning: clean in accordance with Section 01 74 00.

.1 Leave Work area clean at end of each day.

.2 Final Cleaning: upon completion remove surplus materials, rubbish, tools, and equipment in accordance with Section 01 74 00.

.1 Remove recycling containers and bins from site and dispose of materials at appropriate facility.

3.5 PROTECTION

.1 Protect installed products and components from damage during construction.

.2 Repair damage to adjacent materials caused by transformers installation.

END OF SECTION

PART 1 - GENERAL

1.1 SECTION INCLUDES

.1 Materials and components for dry type transformers up to 600 V primary, equipment identification and transformer installation.

1.2 REFERENCES

.1 ANSI/ASHRAE/IES Standard 90.1-2013 – Energy Standard for Buildings Except Low-Rise Residential Buildings.

.2 CSA Group:

.1 CSA C22.1:21, Canadian Electrical Code, Part 1 (25th Edition), Safety Standard for Electrical Installations.

.2 Ontario Electrical Safety Code (28th edition/2021).

.3 CSA C22.2 No. 47-13 (R2018), Air-cooled transformers (dry type).

.4 CSA C9-17, Dry-type transformers.

.5 CSA C802.2-18, Minimum Efficiency Values for Dry-Type Transformers.

.3 IEEE C57.110-2018, IEEE Recommended Practice for Establishing Liquid-Immersed and Dry-Type Power and Distribution Transformer Capability When Supplying Nonsinusoidal Load Currents: this standard defines how K-factor is calculated.

.4 National Electrical Manufacturers Association (NEMA):

.1 NEMA ST-20-2014, Dry-Type Transformers for General Applications: sound levels.

.5 NETA ATS - Acceptance Testing Specifications for Electrical Power Distribution Equipment (published by the International Electrical Testing Association).

.6 Ontario Building Code and its referenced standards.

.7 UL 1561, Standard for Dry-Type General Purpose and Power Transformers.

1.3 ACTION SUBMITTALS

.1 Product Data: Provide outline and support point dimensions of enclosures and accessories, unit weight, voltage, power, and impedance ratings and characteristics, tap configurations, insulation system type, and rated temperature rise.

1.4 INFORMATIONAL SUBMITTALS

.1 Test Reports: Indicate loss data, efficiency at 25, 50, 75, and 100 per cent rated load, and sound level.

.2 Submit manufacturer's installation instructions.

.1 Indicate application conditions and limitations of use stipulated by Product testing agency specified under Regulatory Requirements.

.2 Include instructions for storage, handling, protection, examination, preparation, and installation of product.

1.5 CLOSEOUT SUBMITTALS

.1 Record actual locations of transformers in project record documents.

.2 Document test results from NETA ATS.

.3 Copies of completed factory reports and testing reports.

1.6 DELIVERY, STORAGE, AND HANDLING

.1 Store and handle in strict compliance with manufacturer’s instructions and recommendations. Protect from potential damage from weather and construction operations.

.2 Store so condensation will not form on or in the transformer housing and if necessary, apply temporary heat where required to obtain suitable service conditions. Store in a clean, dry space. Maintain factory wrapping or provide an additional heavy canvas or heavy plastic cover to protect units from dirt, water, construction debris, and traffic.

.3 Handle to manufacturer's written instructions. Lift only with lugs provided for the purpose. Handle carefully to avoid damage to transformer internal components, enclosure, and finish.

.4 Handle transformer using proper equipment for lifting and handling, use when necessary lifting eye, and/or brackets provided for that purpose.

1.7 WARRANTY

.1 The transformer shall carry a 1 year warranty from the time of substantial performance.

PART 2 - PRODUCTS

2.1 GENERAL

.1 Transformers shall be standard general purpose dry type unless otherwise indicated on drawings as K-Rated or Harmonic Mitigation type.

.2 Use transformers of one manufacturer throughout project and in accordance with CSA C22.2 No. 47 and CSA C9.

2.2 MANUFACTURERS

.1 Manufacturer List:

.1 Bemag.

.2 Delta Transformer.

.3 Eaton.

.4 Hammond.

.5 Powersmiths.

.6 Rex Power Magnetics.

.7 Siemens.

.8 Schneider Electric.

.9 STI.

.2 Substitutions: permitted if approved by the Consultant prior to Tender closing date.

2.3 REGULATORY REQUIREMENTS

.1 Products: Listed and classified by CSA (Canadian Standards Association).

.2 Efficiency ratings:

.1 Meet or exceed the efficiency levels indicated in CSA C802.2-12, and ASHRAE 90.1-2013, Table 8.4.4.

2.4 GENERAL PURPOSE TRANSFORMERS

.1 NEMA ST-20, factory-assembled, air cooled low-inrush dry type transformer, ratings and voltages as indicated on drawings.

.2 Single or three phase as indicated on drawings.

.3 Type: AN/AA ventilated self-cooled.

.4 Copper windings.

.5 Finish: Final coating to be ANSI 61 Grey Epoxy Powder.

.6 T-connected transformers are not acceptable.

.7 Isolate core and coil from enclosure using vibration-absorbing mounts.

.8 Impedance: standard (3% to 5% nominal for up to 75 kVA, 4% to 6% for transformers 112.5 kVA and greater).

2.5 K-FACTOR RATED TRANSFORMERS

.1 Provide where indicated on drawings.

.2 K-Factor Rating: Transformers shall be K-Factor 7, 13, or higher rated and comply with UL 1561 requirements for non-sinusoidal load current-handling capability to the degree defined by designated K-factor.

.1 Unit shall not overheat when carrying full-load current with harmonic distortion corresponding to designated K-factor.

.2 Indicate value of K-factor on transformer nameplate.

2.6 PRIMARY VOLTAGE

.1 600 volts delta, 3 phase;

2.7 SECONDARY VOLTAGE

.1 120/208 volts, 3 phase wye.

2.8 INSULATION SYSTEM AND AVERAGE WINDING TEMPERATURE RISE

.1 1-15 kVA: Class 185 with [150] degrees C rise.

.2 16-500 kVA: Class 220 with [150] degrees C rise.

.3 Above 500 kVA: Class 220 with [150] degrees C rise.

2.9 CASE TEMPERATURE

.1 Limits in accordance with CSA C22.2 No. 47.

2.10 WINDING TAPS

.1 To NEMA ST-20.

.2 Four full capacity 5 per cent adjustment taps, 2 at 2.5 per cent FCBN (full capacity below nominal) and 2 at 2.5 per cent FCAN (full capacity above nominal).

2.11 BASIC IMPULSE LEVEL

.1 10 kV BIL.

2.12 GROUNDING

.1 Ground core and coil assembly to enclosure by means of a visible flexible copper grounding strap.

2.13 MOUNTING

.1 1-15 kVA: suitable for wall mounting.

.2 16-75 kVA: suitable for wall, or floor, as shown.

.3 Larger than 75 kVA: suitable for floor mounting.

2.14 COIL CONDUCTORS

.1 Continuous windings with terminations brazed or welded.

2.15 ENCLOSURE

.1 NEMA ST-20, CSA type 2 ventilated, sprinkler-proof. Provide lifting eyes or brackets.

.2 CSA type 3R for outdoor locations.

2.16 CATCHER/DRIP BASE PLATE

.1 Constructed from galvanized steel sheet metal having the minimum thickness as that of the transformer's enclosure.

.2 To be provided for all transformers that are wall mounted, or suspended off the floor.

2.17 SOUND LEVELS

.1 To NEMA ST-20 for transformers up to 300 kVA:

.1 Up to 9 kVA: 40 dB.

.2 10 – 50 kVA: 45 dB.

.3 51 – 150 kVA: 50 dB.

.4 151 – 300 kVA: 55 dB.

.2 Sound levels 3 dB less than NEMA ST-20 for transformers 301 kVA and greater:

.1 301 – 500 kVA: 57 dB.

.2 501 – 700 kVA: 59 dB.

.3 701 – 1000 kVA: 61 dB.

.4 Above 1000 kVA: 3 dB less than NEMA ST-20.

2.18 NAMEPLATE

.1 Transformer shall have embossed aluminum or stainless steel nameplate indicating, but not restricted to the following:

.1 kVA rating.

.2 Voltage rating.

.3 Impedance.

.4 Type.

.5 Insulation class.

.6 Temperature rise.

.7 Connection diagram.

.8 Serial number.

2.19 EQUIPMENT IDENTIFICATION

.1 Provide equipment identification in accordance with Section 26 05 53.

2.20 SOURCE QUALITY CONTROL

.1 Production test each unit according to NEMA ST-20.

PART 3 - EXECUTION

3.1 INSTALLATION

.1 Mounting:

.1 Mount dry type transformers up to 75 kVA, on floor, wall, or suspended from celling, as indicated on plans.

.2 Maintain clear space as described in 2021 OESC Rule 2-312.

.3 Mount dry type transformers rated above 75 kVA on floor.

.4 For wall mounted transformers, provide rubber-in-shear isolation mounts above bracket-supported rails secured from the wall.

.5 For ceiling mounted transformers, provide trapeze hangers and provide rubber-in-shear isolation mounts.

.6 Where a transformer is wall mounted or suspended off the floor, provide a metal catcher/drip base plate, and bolt to the bottom of the transformer below the base channel to conform to CSA C22.2 No. 47. Install in accordance with transformer manufacturer's instructions and recommendations.

.7 Mount floor mounted transformers on concrete housekeeping pads, minimum 100 mm (4") thick, and extending a minimum of 150 mm (6") beyond the footprint of the transformer.

.8 Mount vibration isolating pads suitable for isolating the transformer noise from the building structure in accordance with Section 26 05 48.13.

.2 Provide seismic restraints in accordance with Section 26 05 48.

.3 Set transformer plumb and level.

.4 Use flexible conduit, under the provisions of Section 26 05 33.13, 600 mm minimum length, for connections to transformer case. Make conduit connections to side panel of enclosure.

.5 Provide grounding and bonding to Section 26 05 26.

.6 Ensure adequate clearance around transformer for ventilation.

.7 Install transformers in level upright position.

.8 Remove shipping supports only after transformer is installed and just before putting into service.

.9 Loosen isolation pad bolts until no compression is visible.

.10 Make primary and secondary connections in accordance with wiring diagram.

.11 Energize transformers after installation is complete.

3.2 FIELD QUALITY CONTROL

.1 Section 01 43 00: Field Inspection, Testing, Adjusting.

.2 Perform inspections and tests listed in NETA ATS, Section 7.2.

3.3 ADJUSTING

.1 Measure primary and secondary voltages and make appropriate tap adjustments.

END OF SECTION

PART 1 - GENERAL

1.1 SECTION INCLUDES

.1 Power distribution panelboards – Circuit breaker type.

.2 Lighting and Appliance Branch Circuit Panelboards.

1.2 RELATED REQUIREMENTS

.1 Section 26 28 16.02 – Molded Case Circuit Breakers.

.2 Section 26 43 13 – Surge Protective Devices for Low-Voltage Electrical Power Circuits.

1.3 REFERENCES

.1 CSA C22.1-12 - Canadian Electrical Code, Part I (22nd Edition), Safety Standard for Electrical Installations

.2 Ontario Electrical Safety Code (25th Edition / 2012)

.3 CSA C22.2 No.29 - Panelboards and Enclosed Panelboards.

.4 NEMA AB1 - Molded Case Circuit Breakers, Molded Case Switches, and Circuit - Breaker Enclosures.

.5 NEMA ICS 2 - Industrial Control and Systems: Controllers, Contactors, and Overload Relays Rated 600 Volts.

.6 NEMA KS1 - Enclosed and Miscellaneous Distribution Equipment Switches (600 Volts Maximum).

.7 NETA ATS - Acceptance Testing Specifications for Electrical Power Distribution Equipment (published by the International Electrical Testing Association).

.8 The panelboards and circuit breakers referenced herein are designed and manufactured according to the latest revision of the following specifications.

.1 NEMA PB 1 - Panelboards

.2 NEMA PB 1.1 - Instructions for Safe Installation, Operation and Maintenance of Panelboards Rated 600 Volts or Less.

.3 NEMA AB 1 - Molded Case Circuit Breakers

.4 CSA C22.2 No. 29-M1989 - Panelboards and Enclosed Panelboards

.5 CSA C22.2 No. 5-M91 - Molded Case Circuit Breakers

1.4 ACTION SUBMITTALS

.1 Submit in accordance with Section Division 01.

.2 Shop drawings shall contain overall panelboard dimensions, interior mounting dimensions, and wiring gutter dimensions. The location of the main, branches, and solid neutral shall be clearly shown. In addition, the drawing shall illustrate one line diagrams with applicable voltage systems.

.3 Shop drawings

.1 Indicate the following:

.1 Outline and support point dimensions

.2 Voltage

.3 Main bus ampacity

.4 Integrated short circuit ampere rating

.5 Circuit breaker arrangement, types and sizes.

.2 The following information shall be submitted to the Engineer:

.1 Breaker layout drawing with dimensions indicated and nameplate designation

.2 Component list

.3 Conduit entry/exit locations

.4 Assembly ratings including:

.1 Short-circuit rating

.2 Voltage

.3 Continuous current

.5 Cable terminal sizes

.6 Product data sheets

.3 Where applicable, the following additional information shall be submitted to the Engineer:

.1 Key interlock scheme drawing and sequence of operations

.4 Submittals for Construction

.1 The following information shall be submitted for record purposes:

.1 Installation information

1.5 CLOSEOUT SUBMITTALS

.1 Refer to Section Division 01.

.2 Record actual locations of panelboards and record actual circuiting arrangements in project record documents.

.3 Maintenance Data: Include spare parts listing; source and current prices of replacement parts and supplies; and recommended maintenance procedures and intervals.

.4 Final as-built drawings and information shall incorporate all changes made during the manufacturing and installation process.

1.6 MAINTENANCE MATERIAL SUBMITTALS

.1 Manufacturer shall provide installation instructions and NEMA Standards Publication PB 1.1 - Instructions for Safe Installation, Operation and Maintenance of Panelboards Rated 600 Volts or Less.

.2 Equipment operation and maintenance manuals shall be provided with each assembly shipped and shall include instruction leaflets, instruction bulletins and renewal parts lists where applicable, for the complete assembly and each major component.

.3 Provide two of each panelboard key.

.4 Provide final panelboard schedules indicating panelboard data, phasing, breaker sizes, and loads served.

1.7 QUALITY ASSURANCE

.1 Regulatory Requirements

.1 Products: Listed and classified by CSA (Canadian Standards Association).

.2 Qualifications

.1 Company specializing in manufacturing of panelboard products with a minimum of 20 years' experience.

.2 The manufacturer of the assembly shall be the manufacturer of the major components within the assembly.

.3 For the equipment specified herein, the manufacturer shall be ISO 9001 or 9002 certified.

.4 The manufacturer of this equipment shall have produced similar electrical equipment for a minimum period of five (5) years. When requested by the Engineer, an acceptable list of installations with similar equipment shall be provided demonstrating compliance with this requirement.

1.8 DELIVERY, STORAGE, AND HANDLING

.1 Inspect and report concealed damage to carrier within their required time period.

.2 Handle carefully to avoid damage to panelboard internal components, enclosure, and finish.

.3 Store in a clean, dry environment. Maintain factory packaging and, if required, provide an additional heavy canvas or heavy plastic cover to protect enclosure(s) from dirt, water, construction debris, and traffic.

.4 Equipment shall be handled and stored in accordance with manufacturer's instructions. One copy of these instructions shall be included with the equipment at time of shipment.

1.9 MANUFACTURER WARRANTY

.1 Warrant specified equipment to be free from defects in materials and workmanship for eighteen (18) months from the date of purchase.

PART 2 - PRODUCTS

2.1 GENERAL

.1 Description: CSA C22.2 No.29, circuit breaker type.

2.02 DISTRIBUTION PANELBOARDS – CIRCUIT BREAKER TYPE

.1 Manufacturers:

.1 Square D by Schneider Electric, I-LINE Series.

.2 Eaton Cutler-Hammer, PRL 3 and PRL4 Series.

.3 Equal by Siemens.

.2 The listing of specific manufacturers above does not imply acceptance of their products that do not meet the specified ratings, features and functions. Manufacturers listed above are not relieved from meeting these specifications in their entirety. Products in compliance with the specification and manufactured by others not named will be considered only if pre-approved by the Consultant ten days prior to bid date.

.3 Panelboard Bus:

.1 Copper, ratings as indicated.

.2 Provide copper neutral bus for panelboards indicated for 4-wire systems.

.3 Provide copper ground bus in each panelboard.

.4 Short Circuit Ratings:

.1 Panelboards rated 600 V shall have minimum integrated short-circuit ratings as shown on the drawings or as herein scheduled, but not less than 65 000 amperes RMS symmetrical.

.2 Distribution panelboards with bolt-on devices contained therein shall have interrupting ratings as specified herein or indicated on the drawings.

.3 Panelboards shall be fully rated.

.4 Where indicated, provide circuit breakers ULC listed for application at 100 per cent of their continuous ampere rating in their intended enclosure.

.5 Minimum integrated short circuit rating: Panelboards rated 240 V shall have minimum integrated short-circuit ratings as shown on the drawings or as herein scheduled, but not less than 10 000 amperes RMS symmetrical.

.6 Molded Case Circuit Breakers: To Section 26 28 16.02.

.7 Circuit Breaker Accessories: Trip units and auxiliary switches as indicated.

.8 Cabinet Front: Surface type, fastened hinge and latch, metal directory frame, finished in manufacturer's standard gray enamel.

.9 Enclosures: CSA type 2 sprinklerproof complete with drip hood, or as noted.

.10 Trims shall be equipped with a flush lock.

.11 Breaker positions labeled as “Spare” or “Space” shall constitute no less than 20 per cent of available breaker positions, whether indicated or not in panelboard schedules.

.12 Each panel shall be complete with a directory which shall be mounted inside door in a metal frame with clear plastic cover and copy in each Data Book. Use final Room Numbers for directories.

2.2 BRANCH CIRCUIT PANELBOARDS

.1 Manufacturers:

.1 Square D by Schneider Electric, NQ or NQOD Series.

.2 Eaton Cutler-Hammer, POW-R-LINE 1, POW-R-LINE 2, POW-R-LINE 3 Series.

.3 Equal by Siemens.

.2 Description: CSA C22.2 No.29, circuit breaker type, lighting and appliance branch circuit panelboard.

.3 Panelboard Bus:

.1 Copper, ratings as indicated.

.2 Provide double copper neutral bus in each panelboard.

.3 Provide copper ground bus in each panelboard.

.4 Provide insulated ground bus where scheduled.

.4 Minimum Integrated Short Circuit Rating: 10 000 amperes RMS symmetrical for 240 volt panelboards, or as indicated.

.5 Molded Case Circuit Breakers: NEMA AB 1, plug-on type thermal magnetic trip circuit breakers, with common trip handle for all poles, listed as Type SWD for lighting circuits, Type HACR for air conditioning equipment circuits, Class A ground fault interrupter circuit breakers where scheduled. Do not use tandem circuit breakers.

.6 Current Limiting Molded Case Circuit Breakers where indicated: NEMA AB 1, circuit breakers with integral thermal and instantaneous magnetic trip in each pole, coordinated with automatically resetting current limiting elements in each pole. Interrupting rating 100,000 symmetrical amperes, let-through current and energy level less than permitted for same size Class RK-5 fuse.

.7 Cabinet Front: Surface cabinet front with concealed trim clamps, concealed hinge, metal directory frame, and flush lock all keyed alike. Finish in manufacturer's standard gray enamel.

.8 Enclosure shall be CSA type 2 sprinklerproof complete with drip hood, or as noted.

.9 Trims shall be equipped with a flush lock

.10 Breaker positions labeled as “Spare” or “Space” shall constitute no less than 20 per cent of available breaker positions, whether indicated or not in panelboard schedules.

.11 Panelboards: to CSA C22.2 No.29 and product of one manufacturer.

.1 Install circuit breakers in panelboards before shipment.

.2 In addition to CSA requirements manufacturer's nameplate must show fault current that panel including breakers has been built to withstand.

.12 Panelboards rated 240 Vac or less shall have short-circuit ratings as shown on the drawings or as herein scheduled, but not less than 10,000 amperes RMS symmetrical.

.13 Bus and breakers rated for symmetrical interrupting capacity, as indicated.

.14 Sequence phase bussing with odd numbered breakers on left and even on right, with each breaker identified by permanent number identification as to circuit number and phase.

.15 Panelboards: mains, number of circuits, and number and size of branch circuit breakers as indicated.

.16 Two keys for each panelboard and key panelboards alike.

.17 Copper bus with neutral of same ampere rating as mains.

.18 Mains: suitable for bolt-on breakers.

.19 Trim with concealed front bolts and hinges.

.20 Trim and door finish: baked grey enamel.

.21 The minimum short-circuit rating for branch circuit panelboards shall be as specified herein or as indicated on the drawings. Panelboards shall be fully rated.

.22 Bolt-on type, heavy-duty, quick-make, quick-break, single- and multi-pole circuit breakers of the types specified herein, shall be provided for each circuit with toggle handles that indicate when unit has tripped.

.23 Circuit breakers shall be thermal-magnetic type with common type handle for all multiple pole circuit breakers. Circuit breakers shall be minimum 100-ampere frame and through 100-ampere trip sizes shall take up the same pole spacing. Circuit breakers shall be ULC listed as type SWD for lighting circuits.

.1 Circuit breaker handle locks shall be provided for all circuits that supply exit signs, emergency lights, energy management, and control system (EMCS) panels and fire alarm panels.

.24 Circuit breakers shall have a minimum interrupting rating of 10 000 amperes symmetrical at 240 volts, and 14 000 amperes symmetrical at 480 volts, unless otherwise noted on the drawings.

.25 Each panel shall be complete with a directory which shall be mounted inside door in a metal frame with clear plastic cover and copy in each Data Book. Use final Room Numbers for directories.

.26 Lighting and receptacle panels shall be surface or flush-mounting type, as shown.

.27 Panels shall be dead front type in code gauge steel enclosures. All panels shall be sprinkler proof c/w drip hoods as required.

.28 Panels shall have mains of voltage and capacity, and main and branch breakers, as shown on the drawings. Spaces shall include necessary bus work such that Owners, at a later date, need buy only the breakers.

.29 Where panels exceed 42 circuits, use multi-section panel with main cross-over solid bus bars. Main bus capacity of each section shall be full size to match cross-over bus.

.30 Breakers shall have bolted type connections. Multi-pole breakers shall be common trip type with a single handle, suitable for voltage applied and of same manufacture as single pole breakers.

.31 Panels for 120/208 volt, 3-phase, 4-wire systems shall be complete with full size breakers.

.32 Where shown on drawings or required by code, certain breakers shall include ground fault interrupter.

.33 Provide lighting and receptacle panels, surface or flush-mounting type, as shown.

.34 Provide locking bars on non-switched circuits where panels are used for switching lighting circuits.

.35 Panels for non-linear loads shall be complete with lugs for double neutrals.

.36 Panels shall be given a rust-resistant treatment to both tub and trim.

.37 Flush panels shall have concealed hinges and flush type combination lock latch. Locks shall be chrome plated. Doors shall open minimum 135 degrees. Trims shall have fasteners concealed and shall be prime coated to receive room finish paint.

.38 Surface mounted panels shall have manufacturer's standard surface door trim complete with lock and latch. Finish shall be grey.

.39 Recessed panels shall have standard flush trims.

.40 Co-ordinate panel finish with Room Finish Schedule.

2.3 MOLDED CASE CIRCUIT BREAKERS

.1 Breakers: to Section 26 28 16.02.

.2 Breakers with thermal and magnetic tripping in panelboards except as indicated otherwise.

.3 Main breaker: separately mounted on top or bottom of panel to suit cable entry. When mounted vertically, down position should open breaker.

.4 Lock-on devices for 10 per cent of 15 A to 30 A breakers installed as indicated. Turn over unused lock-on devices to Owner.

.5 Lock-on devices for fire alarm, security, and sprinkler circuits.

.6 Provide shunt trips, bell alarms, and auxiliary switches as shown on the contract drawings.

.7 Provide breakers for externally mounted Surge Protective Devices in accordance with Section 26 43 13.

2.4 CONSTRUCTION

.1 General:

.1 Interiors shall be completely factory assembled. They shall be designed such that switching and protective devices can be replaced without disturbing adjacent units and without removing the main bus connectors.

.2 Surface trims shall be same height and width as box. Flush trims shall overlap the box by 3/4 of an inch on all sides.

.3 A temporary directory card with a clear plastic cover shall be supplied and mounted on the inside of each door.

.4 All locks shall be keyed alike. Key same as existing.

.2 Branch Circuit Panelboards:

.1 Trims for branch circuit panelboards shall be supplied with a hinged door over all circuit breaker handles. Doors in panelboard trims shall not uncover any live parts. Doors shall have a semi flush cylinder lock and catch assembly. Door-in-door trim shall be provided. Both hinged trim and trim door shall utilize three point latching. No tools shall be required to install or remove

trim. Trim shall be equipped with a door-actuated trim locking tab. Equip locking tab with provision for a screw such that removal of trim requires a tool, at the owner's option. Installation shall be tamper resistant with no exposed hardware on the panelboard trim.

2.5 BUS

.1 Main bus bars shall be copper sized in accordance with CSA standards to limit temperature rise on any current carrying part to a maximum of 65 degrees C above an ambient of 40 degrees C maximum.

.2 A copper system ground bus shall be included in all panelboards.

.3 Full-size (100 per cent rated) insulated copper neutral bars shall be included for panelboards shown with neutral. Bus bar taps for panels with single-pole branches shall be arranged for sequence phasing of the branch circuit devices. Neutral busing shall have a suitable lug for each outgoing feeder requiring a neutral connection. 200 per cent rated neutrals shall be supplied for panels designated on drawings with oversized neutral conductors.

2.6 EQUIPMENT IDENTIFICATION

.1 Provide equipment identification in accordance with Section 26 05 53.

.2 Nameplate for each panelboard size 4 engraved.

.3 Nameplate for each branch circuit in distribution panelboards size 2 engraved.

.4 Complete circuit directory with typewritten legend showing location and load of each circuit.

.5 Provide an engraved nameplate for each panelboard section.

.6 Provide copies of all circuit directories in Manuals.

PART 3 - EXECUTION

3.1 INSTALLATION

.1 Install panelboards to CSA C22.1.

.2 Install panelboards plumb.

.3 Height: 1800 mm to top of panelboard; install panelboards taller than 1800 mm with bottom no more than 100 mm above floor.

.4 Provide filler plates for unused spaces in panelboards.

.5 Provide typed circuit directory for each branch circuit panelboard. Revise directory to reflect circuiting changes required to balance phase loads.

.6 Provide engraved plastic nameplates under the provisions of Section 26 05 53.

.7 Ground and bond panelboard enclosure according to Section 26 05 26.

.8 Locate panelboards as indicated and mount securely, plumb, true and square, to adjoining surfaces.

.9 Install surface mounted panelboards on fire rated plywood backboards in accordance with Section 06 10 00. Where practical, group panelboards on common backboard.

.10 Connect loads to circuits.

.11 Connect neutral conductors to common neutral bus with respective neutral identified.

.12 Deliver five (5) duplicate keys for each panel lock to Owner.

.13 Mount electrical panels, where possible, with top of trim at uniform height of 2000 mm.

.14 Cap ends of conduits in accessible locations in ceiling spaces above panels, to allow for future wiring.

.15 The Contractors shall install all equipment per the manufacturer’s recommendations and the contract drawings.

.16 Install panelboards in accordance with manufacturer's written instructions, NEMA PB 1.1 and Electrical Code requirements.

.17 After completion of wiring, type directory showing a clear description of each circuit being controlled from panel and place in metal frame inside door.

.18 Provide revised directories for existing panels if revised.

.19 Provide circuit breaker handle locks for all circuits that supply exit signs, emergency lights, energy management, and control system (EMCS) panels and fire alarm panels.

3.2 FIELD QUALITY CONTROL

.1 Perform inspections and tests listed in NETA ATS, Section 7.4 for switches, Section 7.5 for circuit breakers.

.2 Inspect complete installation for physical damage, proper alignment, anchorage, and grounding.

.3 Measure steady state load currents at each panelboard feeder; rearrange circuits in the panelboard to balance the phase loads within 20 per cent of each other. Maintain proper phasing for multi-wire branch circuits.

.4 Check tightness of bolted connections and circuit breaker connections using calibrated torque wrench or torque screwdriver per manufacturer's written specifications.

3.3 ADJUSTING

.1 Measure steady state load currents at each panelboard feeder; rearrange circuits in the panelboard to balance the phase loads to within 20 percent of each other.

.2 Maintain proper phasing for multi-wire branch circuits.

3.4 FACTORY TESTING

.1 The following standard factory tests shall be performed on the equipment provided under this section. All tests shall be in accordance with the latest version of NEMA and UL standards.

3.5 CLOSEOUTS

.1 Provide three 27 mm empty conduits from top of lighting, receptacle, telephone, signal and communication panels recessed in walls, to ceiling space.

.2 Include a copy of each panelboard schedule in the Operation and Maintenance manual.

END OF SECTION

PART 1 - GENERAL

1.1 SECTION INCLUDES

.1 Switches, receptacles, wiring devices, cover plates and their installation.

1.2 RELATED REQUIREMENTS

.1 Section 26 09 23 – Lighting Control Devices.

1.3 REFERENCES

.1 Canadian Standards Association

.1 CSA C22.1 - Canadian Electrical Code, Part I, Safety Standard for Electrical Installations.

.2 Ontario Electrical Safety Code.

.3 CSA-C22.2 No.42-99(R2004), General Use Receptacles, Attachment Plugs and Similar Devices.

.4 CAN/CSA-C22.2 No.42.1-00(R2004), Cover Plates for Flush-Mounted Wiring Devices (Bi-National standard, with UL 514D).

.5 CSA-C22.2 No.55-M1986 (R2003), Special Use Switches.

.6 CSA-C22.2 No.111-00(R2005), General-Use Snap Switches (Bi-national standard, with UL 20, twelfth edition).

.2 International Electrotechnical Commission (IEC)

.1 IEC 60309 – Plugs, socket-outlets and couplers for industrial purposes.

1.4 ACTION SUBMITTALS

.1 Submit shop drawings and product data in accordance with Section 01 33 00.

.2 Product Data: Provide manufacturer's catalogue information showing dimensions, colours, and configurations.

1.5 INFORMATIONAL SUBMITTALS

.1 Submit manufacturer's installation instructions.

1.6 REGULATORY REQUIREMENTS

.1 Provide products listed and classified by CSA (Canadian Standards Association).

PART 2 - PRODUCTS

2.1 MANUFACTURERS

.1 Hubbell Bryant.

.2 Cooper Wiring Devices by Eaton.

.3 Pass & Seymour (Legrand).

2.2 WALL SWITCHES

.1 Single pole, double pole, three-way, four-way switches to: CSA-C22.2 No.55 and CSA-C22.2 No.111.

.2 Description: CSA-C22.2 No.111, Commercial Spec Grade, AC only general-use snap switch.

.3 Local switches shall be 20 ampere, silent, brown coloured, AC type and CSA certified, specification grade. Provide switches rated to suit system voltage 120 V or 347 V.

.4 Manually-operated general purpose AC switches with following features:

.1 Terminal holes approved for 10 AWG wire.

.2 Silver alloy contacts.

.3 Urea or melamine moulding for parts subject to carbon tracking.

.4 Suitable for back and side wiring.

.5 Voltage: 120 volt or 347 volt, AC as indicated.

.6 Current: 20 amperes.

.7 Body and Handle: plastic with toggle handle. Black color for normal power and Red color for emergency power.

.8 Toggle operated fully rated for tungsten filament and fluorescent lamps, and up to 80% of rated capacity of motor loads.

.9 Example Products (Decorator style):

.1 120 volt:

.1 Hubbell HBL2121 series.

.10 Example Products (Toggle style):

.1 120 volt:

.1 Hubbell HBL1221 (single pole).

.2 Hubbell HBL1222 (double pole).

.3 Hubbell HBL1223 (three-way).

.4 Hubbell HBL1224 (four-way).

.11 Local switches and receptacles shall be of the same manufacturer throughout except where a specified item is not made by that manufacturer.

2.3 RECEPTACLES

.1 General

.1 Description: CSA C22.2 No.42, Extra heavy duty hospital grade use receptacles with green dot symbol back and side wired, tamper-resistant, flush, thermoplastic polyester face/body construction, duplex U-ground, 15 ampere, 125 V, 2-pole, 3-wire grounding receptacles complete with one piece nickel-plated brass mounting strip with integral grounding clips, ground retention clips, nickel-plated brass wiring clamps with nickel-plated brass screws, front circuit identification area and reinforced thermoplastic base.

.2 Tamper-resistant receptacles shall permit current to flow only while a standard plug is in the proper position in the receptacle. All exposed screws shall be tamper-resistant.

.3 Black color for normal power and Red color for emergency power.

.4 Configuration: Type as specified and indicated.

.5 GFCI Receptacle: Convenience receptacle with integral ground fault circuit interrupter to meet regulatory requirements.

.6 Receptacles of one manufacturer throughout project.

.2 Receptacles shall be extra heavy duty hospital grade, unless noted otherwise.

.3 Other types of receptacles shall be provided as shown on Drawings.

2.4 COVER PLATES

.1 Cover plates for wiring devices to: CAN/CSA-C22.2 No.42.1.

.2 Cover plates from one manufacturer throughout project.

.3 Secure cover plates to the device frames with tamper-resistant screws to match the cover plate.

.4 Sheet steel utility box cover for wiring devices installed in surface-mounted utility boxes.

.5 Stainless steel, vertically brushed, cover plates, thickness 2.5 mm for wiring devices mounted in flush-mounted outlet box.

.6 Cast cover plates for wiring devices mounted in surface-mounted FS or FD type conduit boxes.

.7 Weatherproof double lift spring-loaded cast aluminum cover plates, complete with gaskets for duplex receptacles as indicated.

.8 Weatherproof spring-loaded cast aluminum cover plates complete with gaskets for single receptacles or switches.

.9 Wet Location and weatherproof devices: receptacles and cover plates shall be suitable for wet locations, and provide shielding with and without a plug inserted into the receptacle in accordance with OESC rule 26-702.

PART 3 - EXECUTION

3.1 MOUNTING HEIGHTS

.1 In accordance with Section 26 05 00.

3.2 EXAMINATION

.1 Verify that outlet boxes are installed at proper height.

.2 Verify that wall openings are neatly cut and will be completely covered by wall plates.

.3 Verify that branch circuit wiring installation is completed, tested, and ready for connection to wiring devices.

3.3 PREPARATION

.1 Provide extension rings to bring outlet boxes flush with finished surface.

.2 Clean debris from outlet boxes.

3.4 INSTALLATION

.1 Install to CSA C22.1.

.2 Install devices plumb and level.

.3 Install switches with OFF position down.

.4 Install wall dimmers to achieve full rating specified and indicated after de-rating for ganging as instructed by manufacturer.

.5 Do not share neutral conductor on load side of dimmers.

.6 Install receptacles with grounding pole on bottom.

.7 Connect wiring device grounding terminal to outlet box with bonding jumper.

.8 Install decorative plates on switch, receptacle, and blank outlets in finished areas.

.9 Connect wiring devices by wrapping conductor around screw terminal.

.10 Use jumbo size plates for outlets installed in masonry walls.

.11 Install galvanized steel plates on outlet boxes and junction boxes in unfinished areas, above accessible ceilings, and on surface mounted outlets.

.12 Switches:

.1 Install single throw switches with handle in "UP" position when switch closed.

.2 Install switches in gang type outlet box when more than one switch is required in one location.

.13 Receptacles:

.1 Install receptacles in gang type outlet box when more than one receptacle is required in one location.

.2 Where split receptacle has one portion switched, mount vertically and switch upper portion.

.3 Connect receptacle grounding terminal to the outlet box with an insulated green ground strap.

.4 Receptacles to be black for devices connected to normal power circuits, red for devices connected to essential power circuits including isolated power centres. Isolated ground receptacles connected to circuits fed from uninterruptible power supply units to be orange colour. Generally, install receptacles in Patient Care Areas vertically with ground pins up.

.5 Safety shutter type receptacles to be located where shown and required by code and CSA Z32.

.6 In patient care areas, 15A/20A straight blade receptacles to be hospital grade.

.7 Comply with requirements of CSA Standard Z32, with regards to identifying circuit number and supplying panelboard, permanently identified at outlets. Identify this information in areas on front of each receptacle. In addition, provide typed label on wall below each device faceplate, identifying circuit number and panelboard from where each device is fed. Confirm nomenclature with Consultant prior to printing of labels and nameplates. Turn over label maker to Consultant/Owner prior to application for Certificate of Substantial Performance of the Work.

.14 Cover plates:

.1 Protect cover plate finish with paper or plastic film until painting and other work is finished.

.2 Install suitable common cover plates where wiring devices are grouped.

.3 Do not use cover plates meant for flush outlet boxes on surface-mounted boxes.

.4 Do not install plates until final painting of room or area is completed. Remove protective covering.

.5 Within special imaging/scanning unit type rooms, devices including mounting screws and hardware to be of non-ferrous construction as per unit manufacturer’s instructions.

.6 Confirm exact material, finish, and colour of faceplates for devices in any particular area with Consultant prior to ordering. Submit sample board as per requirements of Part 1.

.7 Provide faceplates with printed self-adhesive label on inside face identifying circuit number and panel feeding device. Turn over label maker to Consultant prior to application for Certificate of Substantial Performance of the Work.

.15 Circuit identification: to match existing facility standards.

3.5 FIELD QUALITY CONTROL

.1 Inspect each wiring device for defects.

.2 Operate each wall switch with circuit energized and verify proper operation.

.3 Verify that each receptacle device is energized.

.4 Test each receptacle device for proper polarity.

.5 Test each GFCI receptacle device for proper operation.

.6 For all Patient Care receptacles, include for and arrange for third party independent testing company to perform Hospital Grade receptacle testing in accordance with CSA-Z23. Independent Testing Organizations:

.1 AC Tesla.

.2 Brosz and Associates.

.3 C-INTECH.

.4 Eastenghouse.

.5 Enkompass.

.6 G.T. Wood.

.7 Bender.

3.6 ADJUSTING

.1 Adjust devices and wall plates to be flush and level.

3.7 CLEANING

.1 Clean exposed surfaces to remove splatters and restore finish.

END OF SECTION

PART 1 - GENERAL

1.1 SUBMITTALS

.1 Provide electrical distribution system test reports.

.2 Provide shop drawings for products specified in this Section.

1.2 BREAKERS

.1 Size breakers as per drawings and/or schedules, but in absence of direction, size breakers to suit intended application, to suit coordination study requirements and in accordance with local governing electrical safety code.

1.3 EQUIPMENT WITHSTAND RATINGS

.1 Electrical equipment, circuit protective devices, bussing and switches to be rated for interrupt and withstand short circuit faults greater than available fault current at its source of supply.

1.4 DELIVERY, STORAGE, AND HANDLING

.1 Ship low voltage protective devices in original containers.

.2 Do not ship low voltage protective devices installed in distribution equipment.

.3 Store low voltage protective devices in original containers in storage cabinet.

.4 Waste Management and Disposal:

.1 Separate waste materials for reuse and recycling in accordance with Section Division 00 and Division 01 requirements.

1.5 MAINTENANCE MATERIALS

.1 Provide maintenance materials in accordance with Section 01.

PART 2 - PRODUCTS

2.1 DISCONNECT SWITCHES MANUFACTURERS

.1 Eaton;

.2 Schneider;

.3 Siemens;

.4 General Electric.

2.2 DISCONNECT SWITCHES REQUIREMENTS

.1 CSA approved heavy duty disconnect (safety) switches;

.2 Front operated with a handle suitable for padlocking in "OFF" position and arranged so that enclosure cover cannot be opened while handle is in "ON" position

.3 Operating mechanisms: quick-break, positive acting with visible blades and a line terminal shield;

.4 Fusible units with fuse clips suitable for HRC fuses, unless otherwise noted;

.5 Ampere rating, number of poles and fuse requirements as indicated on drawings;

.6 Factory primed and painted switch enclosures.

.7 Disconnects for variable speed drives to be suitable for use with such drives and include auxiliary switch/contact to de-energize control power circuit, as required and as applicable.

.8 Enclosures for disconnects mounted in climate controlled areas and for standard non-climate controlled applications, to be minimum NEMA 3R.

.9 Use NEMA 4X for corrosive environment applications.

2.3 ADDITIONAL DEVICES FOR EXISTING EQUIPMENT

.1 Products to be of types from existing equipment manufacturers.

.2 Additional breakers for existing panelboards are to match existing device standards and be completely compatible to equipment in which they are installed.

.3 During Bidding period, check and verify exact requirements of existing equipment to ensure that additional devices are accommodated.

.4 Make necessary modifications to equipment to accommodate device and feeder installation.

.5 Provide suitable engraved lamacoid identification nameplate on additional components.

.6 Revise typed circuit directory cards on branch circuit panelboards.

.7 Mount additional devices to standards of existing equipment manufacturer.

.8 Refer to notes on drawings.

.9 Provide additional retrofit work to existing equipment as noted on drawings.

PART 3 - EXECUTION

3.1 INSTALLATION OF DISCONNECT SWITCHES

.1 Provide disconnects switches and install into locations and connect complete.

.2 Ensure adequate clearance is provided as per code requirements and as required for access for operation and maintenance.

.3 Install as follows:

.1 wherever shown on drawings and/or specified herein;

.2 wherever required by starter schedule drawings;

.3 for motorized equipment which cannot be seen from motor starter location or is more than 9 m (30’) from starter location;

.4 for "packaged" equipment fed from a motor starter panel.

.4 Ensure enclosure ratings are suitable for intended applications.

.5 Provide engraved Lamacoid nameplate with nomenclature confirmed with Consultant.

END OF SECTION

PART 1 - GENERAL

1.1 SECTION INCLUDES

.1 Materials for Molded-Case Circuit Breakers (MCCB).

.2 Accessories

1.2 RELATED REQUIREMENTS

.1 Section 26 24 16 – Panelboards.

1.3 REFERENCES

.1 CSA C22.1:21, Canadian Electrical Code, Part 1 (25th Edition), Safety Standard for Electrical Installations.

.2 Ontario Electrical Safety Code (28th edition/2021).

.3 CSA C22.2 No. 5-16, Molded-Case Circuit Breakers, Molded-Case Switches and Circuit-Breaker Enclosures.

.4 NEMA AB1 - Molded Case Circuit Breakers, Molded Case Switches, and Circuit - Breaker Enclosures.

.5 NETA ATS - Acceptance Testing Specifications for Electrical Power Distribution Equipment (published by the International Electrical Testing Association).

1.4 SUBMITTALS

.1 Submit product data in accordance with Section 01 33 00.

.2 Include time-current characteristic curves for breakers with ampacity of 400 A and above, or with interrupting capacity of 22,000 A symmetrical (rms) and over at system voltage.

.3 Include termination temperature rating in degrees C.

.4 Certificate of Origin

.1 Prior to any installation of circuit breakers in either a new or existing installation, Contractor must submit three (3) copies of a certificate of origin from the manufacturer, duly signed by the factory and the local manufacturer's representative, certifying that all circuit breakers come from this manufacturer, they are new and they meet standards and regulations. These certificates must be submitted to the Consultant for review.

.2 A delay in the production of the certificate of origin won't justify any extension of the contract and additional compensation.

.3 Any work of manufacturing, assembly or installation should begin only after acceptance of the certificate of origin by the Consultant. Unless complying with this requirement, Consultant reserves the right to mandate the manufacturer listed on circuit breakers to authenticate all new circuit breakers under the contract, and that, to Contractor's expense.

.4 In general, the certificate of origin must contain:

.1 The name and address of the manufacturer, and the person responsible for authentication. The responsible person must sign and date the certificate;

.2 The name and address of the licensed dealer, and the person of the distributor responsible for the Contractor's account.

.3 The name and address of the Contractor, and the person responsible for the project.

.4 The name and address of the local manufacturer's representative. The local representative must sign and date the certificate.

.5 The name and address of the building where circuit breakers will be installed:

.1 Project title.

.2 End user's reference number.

.3 The list of circuit breakers.

PART 2 - PRODUCTS

2.1 GENERAL

.1 Molded-case circuit breakers, Circuit breakers, and Ground-fault circuit-interrupters, Fused circuit breakers, and Accessory high-fault protectors: to CSA C22.2 No. 5.

.2 Bolt-on Molded case circuit breaker: quick- make, quick-break type, for manual and automatic operation with temperature compensation for 40 degrees C ambient.

.3 Plug-in Molded case circuit breakers: quick-make, quick-break type, for manual and automatic operation with temperature compensation for 40 degrees C ambient.

.4 Common-trip breakers: with single handle for multi-pole applications.

.5 Magnetic instantaneous trip elements in circuit breakers to operate only when value of current reaches setting.

.1 Trip settings on breakers with adjustable trips to range from 3-8 times current rating.

.6 Circuit breakers with interchangeable trips.

2.2 INTERRUPTING CAPACITY

.1 Protective devices shall be fully rated, for required available fault current. Series rated shall not be used on this installation.

.2 Refer to Section 26 24 13, and Section 26 24 16.

2.3 MOLDED CASE CIRCUIT BREAKERS – GENERAL

.1 Molded case circuit breaker to operate automatically by means of thermal and magnetic tripping devices to provide inverse time current tripping and instantaneous tripping for short circuit protection.

.2 NEMA AB 1, circuit breakers with integral thermal and instantaneous magnetic trip in each pole.

.3 Provide circuit breakers UL listed as Type HACR for air conditioning equipment branch circuits.

.4 1-, 2-, or 3-pole bold on, single-handle common trip voltage as indicated on drawings.

.5 Overcentre toggle-type mechanism, quick-make, quick-break action. Trip indication is by handle position.

.6 Calibrate for operation in 40 degree C ambient temperature.

2.4 MOLDED CASE CIRCUIT BREAKERS – UP TO 150 AMPERE

.1 Permanent trip unit containing individual thermal and magnetic trip elements in each pole, unless noted otherwise on drawings.

2.5 ADDITIONAL FEATURES

.1 Provide as indicated on drawings:

.1 Shunt trip.

.2 Auxiliary switch.

.3 Motor-operated mechanism.

.4 Under-voltage release.

.5 On-off locking device.

.6 Handle mechanism.

2.6 ENCLOSED BREAKERS

.1 Molded case, front operated, automatic circuit breakers sized as specified on drawings each secured in a NEMA 1, flush wall mounting enclosure with steel front panel.

.2 Voltage rating suitable for circuit phase to phase voltage as indicated on drawings.

.3 Units to include solid state adjustable trip units and contactors. Contactors to be of rating and type to suit application.

2.7 CIRCUIT BREAKERS FOR EXISTING DISTRIBUTION EQUIPMENT

.1 Products to be of types from existing equipment manufacturers.

.2 Additional breakers for existing panelboards are to match existing device standards and be completely compatible to equipment in which they are installed.

.3 During Bidding period, check and verify exact requirements of existing equipment to ensure that additional devices are accommodated.

.4 Make necessary modifications to equipment to accommodate device and feeder installation.

.5 Provide suitable engraved lamacoid identification nameplate on additional components to suit existing.

.6 Revise typed circuit directory cards on branch circuit panelboards.

.7 Mount additional devices to standards of existing equipment manufacturer.

.8 Refer to notes on drawings.

.9 Provide additional retrofit work to existing equipment as noted on drawings.

PART 3 - EXECUTION

3.1 INSTALLATION

.1 Install circuit breakers as per related sections.

END OF SECTION

PART 1 - GENERAL

1.1 SECTION INCLUDES

.1 Fusible and non-fusible enclosed low-voltage disconnect switches from 30 amps to 800 amps.

1.2 RELATED REQUIREMENTS

.1 Section 26 28 13 – Fuses.

1.3 REFERENCES

.1 CSA Group:

.1 CSA C22.1:21, Canadian Electrical Code, Part 1 (25th Edition), Safety Standard for Electrical Installations.

.2 Ontario Electrical Safety Code (28th Edition/2021).

.3 CAN/CSA-C22.2 No. 4-16 – Enclosed and Dead-Front Switches.

.4 CSA C22.2 No. 248 series – Low-voltage fuses.

.2 NETA (International Electrical Testing Association) ATS - Acceptance Testing Specifications for Electrical Power Distribution Equipment and Systems.

1.4 SUBMITTALS

.1 Product Data: Provide switch ratings, and enclosure dimensions.

1.5 CLOSEOUT SUBMITTALS

.1 Record actual locations of enclosed switches in project record documents.

PART 2 - PRODUCTS

2.1 MANUFACTURERS

.1 Eaton Cutler-Hammer.

.2 Siemens.

.3 Square D by Schneider Electric.

2.2 REGULATORY REQUIREMENTS

.1 Products: Listed and classified by CSA or testing firm acceptable to the authority having jurisdiction as suitable for the purpose specified and indicated.

2.3 DISCONNECT SWITCHES

.1 Provide dedicated disconnect switches at electrical equipment.

.2 Fused or un-fused disconnect or safety switches: Type "A", quick-make, quick-break construction with provision for padlocking switches in either "ON" or "OFF" position.

.1 Quick-make, quick-break.

.2 Heavy duty industrial type.

.3 Lockable with up to 3 padlocks.

.4 Cover interlocked with switch mechanism.

.5 Viewing window for viewing blades.

.3 Fused switches equipped with fuse clips designed for Class "J" fuses and designed to reject standard NEC fuses.

.4 Enclosure: CSA Type 1 sprinkler-proof, or as noted.

.5 Switches throughout project of same manufacturer.

PART 3 - EXECUTION

3.1 INSTALLATION

.1 Provide fused or un-fused safety or disconnect switches as shown and as required by Code.

.2 Install disconnect switches complete with fuses, if applicable, to CSA C22.1.

.3 Apply neatly typed adhesive tag on inside door of each fusible switch indicating NEMA fuse class and size installed.

.4 Coordinate fuse ampere rating with installed equipment. Fuse ampere rating variance between original design information and installed equipment, size in accordance with Bussmann Fusetron 40 degree C recommendations. Do not provide fuses of lower ampere rating than motor starter thermal units.

END OF SECTION

PART 1 - GENERAL

1.1 SECTION INCLUDES

.1 Common requirements for all electric lighting, including interior, exterior, and emergency lighting.

1.2 RELATED REQUIREMENTS

.1 Section 26 09 23 – Lighting Control Devices.

1.3 REFERENCES

.1 Canadian Standards Association (CSA)

.1 CSA C22.1-12, Canadian Electrical Code, Part 1 (22nd edition), Safety Standard for Electrical Installations.

.2 Ontario Electrical Safety Code, 25th Edition / 2012.

.3 CSA C22.2 No. 9.0 - General Requirements for Luminaires.

.4 CSA C22.2 No. 250.0 - Luminaires (Bi-National Standard, with UL 1598).

.5 CAN/CSA E920 - Ballasts for Tubular Fluorescent Lamps - General and Safety Requirements (Adopted IEC 920:1990, first edition, including Amendment 1:1993 and Amendment 2:1995, with Canadian deviations).

.6 CAN/CSA-E928 - Auxiliaries for Lamps - A.C. Supplied Electronic Ballasts for Tubular Fluorescent Lamps - General and Safety Requirements (Adopted IEC 928:1995, second edition, with Canadian deviations).

.7 CAN/CSA-E61347-2-3 - Lamp Controlgear - Part 2-3: Particular Requirements for A.C. Supplied Electronic Ballasts for Fluorescent Lamps (Adopted CEI/IEC 61347-2-3:2000, first edition, 2000-10, with Canadian deviations).

.8 Design Lights Consortium (DLC).

.9 Technical Requirements Table v2.1, or latest edition.

.10 While the specifications do not explicitly call for DLC qualified LED luminaires, the technical criteria provided in the DLC Technical Requirements provide the basis of the requirements for this section of the Specification.

.11 Energy Star

.2 Illumination Engineering Society (IES)

.1 IES HB-10-11 – The Lighting Handbook, 10th Edition.

.2 IES LM-79-08 – Approved Method: Electrical and Photometric Measurements of Solid-State Lighting Products.

.3 IES LM-80-08 – IES Approved Method for Measuring Lumen Maintenance of LED Light Sources.

.3 TM-21-11- IES Technical Memorandum on Projecting Long Term Lumen Maintenance of LED Light Sources.

.4 National Electrical Manufacturer's Association (NEMA)

.5 SSL-1-10 – Electronic Drivers for LED Devices, Arrays, or Systems.

.6 NEMA WD 6 - Wiring Devices - Dimensional Requirements.

1.4 MENTAL HEALTH AREAS

.1 Products accessible to patients in mental health area and any other areas subject to abuse shall include the following features:

.1 Anti-ligature;

.2 Tamper-resistant exposed mounting hardware;

.3 Impact resistant.

1.5 SUBMITTALS FOR REVIEW

.1 Refer to Section 01.

.2 General

.1 The Contractor shall be responsible for supplying equipment product data, and as indicated in the specification, partial or complete working samples of the specified equipment in a timely fashion for design team approval, prior to releasing orders on equipment. Contractor shall be responsible for coordinating all aspects of order placement, deposits, shop drawing procurement, order release, order follow-up, delivery tracking, etc. with Distributor in a timely fashion. Some luminaires may require at least 12 to 16 weeks of lead time or more- the Contractor is responsible for allowing sufficient time for the order-and-deposit process, shop drawing procurement, submittal, and review process. Substitutions will not be accepted on the basis of the contractor's obligation to make any deadlines, contractual or otherwise, agreed by the contractor toward the completion of this project. Lamp submittals are as important and necessary as luminaire submittals and must be supplied by the Contractor to assure correct lamp wattage, color and efficacy.

.2 All submittals shall be generated by respective factories with their seals or other authentication marks and each submittal sheet shall be clearly labeled with respective luminaire type, complete catalog number relevant to submitted luminaire, date of submittal generation and name, phone number, and email address of submittal author in order to track provenance of information. The Consultant may contact respective factory submittal source.

.3 The lighting equipment specified herein has been carefully chosen for its ability to meet the luminous environment requirements of this project. Calculations were typically made to determine luminances, luminance ratios, and/or horizontal and vertical illuminances and uniformities. In some instances, virtual reality "images" were generated with lighting calculation software to assist the Design Team and/or the Client in assessing the lighting quality of the spaces or areas. Equipment and/or manufacturers which have been shown to comply with the established criteria, including ASHRAE/IES 90.1 or California Title 24 or other such energy code as applicable by ordinance, code, Federal law, or mandate, and/or intended LEED or other green-building certification, is specified herein. Substitutions in all likelihood will be unable to meet all or some of the salient criteria as the specified equipment.

.4 Where permitted, substitution submittals shall consist of a physical description, detailed dimensioned drawing and complete photometric and electric data of the proposed lamp, ballast, driver, or transformer as required, and luminaire. Working samples of lamp and luminaire substitutions must also be supplied at time of substitution request for visual check of finish, operating and photometric characteristics, and functional and aesthetic design. Photometric reports must list the actual candela values of the luminaire's distribution with specified or similar lamp in at least five horizontal planes with elevation angles in increments not greater than 5° from nadir to zenith. If additional data is required to account for asymmetric distributions, then this shall also be supplied. Candela curves, lux or footcandle and lumen tables and iso-lux-or-footcandle contours are not acceptable. The Contractor shall be responsible for negotiation with the client, Consultant, Lighting Designer, and Electrical Engineer prior to substitution submittal to as assure fees are available for: redesign project based on proposed substitution ; or review by Consultant, Lighting Designer and Electrical Engineer of all photometric, sample, design and calculation documentation and virtual reality renderings (provided by Contractor) for proposed

substitutions. All substitutions must be identified and approved prior to bid date; and all contractor negotiations re: additional fees for redesign work due to substitutions must occur prior to bid date. A Substitution Request Form shall be completed, submitted, and postmarked along with all relevant documentation required on the Substitution Request Form two weeks prior to bid date. No substitutions will be considered without compliance with this paragraph. Contractor's bid value and/or schedule commitments shall not be based on substitutions in expectation of design team approval, nor on Contractor estimated value of specified equipment. If submitted substitution fails to comply with any specification requirements or is rejected for any or no reason whatsoever, Contractor will furnish specified equipment at no additional cost or delay to the Owner.

.5 The Contractor shall be responsible for obtaining from his supplying lighting manufacturers, for each luminaire, a recommended maintenance manual including:

.1 Vendor and local representative's contact information

.2 Tools required

.3 Instructions

.4 Types of cleaners to be used

.5 Replacement parts identification lists

.6 Equipment product data (high-quality reproducible copies)

.7 Warranty documentation

.3 Shop Drawings:

.1 Indicate dimensions and components for each luminaire that is not a standard product of the manufacturer.

.2 Wiring diagrams for power, signal and control wiring.

.4 Product Data: For each type of lighting fixture, arranged in order of fixture designation. Include data on features, accessories, finishes and the following:

.1 Provide manufacturer's printed product literature, specifications and datasheet and include product characteristics, performance criteria, physical size, finish and limitations.

.2 The product literature shall provide an explanation of all options and descriptors in the catalog number as submitted.

.3 Include luminaire weight.

.4 Provide complete photometric data prepared by independent testing laboratory for each luminaire, for approval by Engineer.

.5 Physical description of lighting fixtures including dimensions.

.6 Ballast, including BF.

.7 Energy-efficiency data, including ballast input wattage.

.8 Life, output (lumens, CCT and CRI), and energy efficiency data for lamps.

.5 Photometric Data and Calculations

.1 Provide Luminaire Data Photometric Testing performed by an independent agency complying with IESNA Lighting Measurement Testing and Calculation Guides.

.2 Submit photometric calculations for typical areas based on layouts as indicated on the drawings.

.1 Submit a photometric calculation for the typical areas based on the existing conditions.

.2 Submit a photometric calculation for the same typical areas based on the proposed new fixtures.

.3 Clearly indicate mounting heights, heights of calculation zones, light loss factors and surface reflectance values.

.4 Use the follow photometric parameters:

.1 Recoverable Light Loss Factors: 0.8

.2 Ceiling reflectance values of 80 per cent.

.3 Wall reflectance value of 50 per cent.

.4 Floor reflectance value of 20 per cent.

.3 Submittals shall be in PDF format, and the native file of the software used to make the photometric analysis.

.4 Submit IES photometric data files for the existing and proposed luminaires.

1.6 SUBMITTALS FOR CLOSEOUT

.1 Section 01: Submittals for project closeout.

.2 Submit manufacturer's operation and maintenance instructions for each product.

.3 Provide a list of all lamp types used on the project, use ANSI and manufacturer’s codes.

1.7 DEFINITIONS

.1 BF: Ballast factor.

.2 CCT: Correlated colour temperature.

.3 CRI: Colour-rendering index.

.4 LER: Luminaire efficacy rating.

.5 LED: Light Emitting Diode.

.6 Lumen: Measured output of lamp and luminaire, or both.

.7 Luminaire: Complete lighting fixture, including ballast housing if provided.

1.8 QUALIFICATIONS

.1 Manufacturer: Company specializing in manufacturing the products specified in this section with minimum five years documented experience.

1.9 REGULATORY REQUIREMENTS

.1 Products shall be listed and classified by CSA (Canadian Standards Association), ULC (Underwriter’s Laboratories of Canada), or certified by recognized independent testing organizations that test to CSA standards.

.2 All equipment and parts specified herein shall bear the "ULC Approved" label (or other NRTL label) indicating compliance with UL requirements or as otherwise allowed by the Authority Having Jurisdiction. All luminaires shall be ULC/ NRTL or CSA listed and labeled for installation in fireproof or non-fireproof construction, dry, damp, or wet locations as required.

.3 Recessed fixtures mounted in an insulated ceiling shall be listed for use in insulated ceilings.

1.10 DELIVERY, STORAGE AND HANDLING

.1 Deliver, store and handle materials in accordance with Section 01 61 00.

.2 Deliver materials to site in original factory packaging, labelled with manufacturer's name, address.

.3 Disposal and recycling of fluorescent lamps as per local regulations.

1.11 EXTRA MATERIALS

.1 Refer to Section 01.

.2 Provide the following additional equipment as listed herein.

.1 Provide an additional 2 per cent spare luminaires of each new type to be provided.

.2 Provide 1 per cent of each plastic lens type.

.3 Provide 2 per cent replacement lamps for each lamp type.

.4 Provide 1 per cent of each ballast type.

.5 Provide 1 per cent of each LED driver type.

.6 Provide three of each type of any special tools required for system use and maintenance.

1.12 WARRANTY

.1 Refer to Section 01 and Section 26 05 00.

.2 The manufacturer shall provide a warranty against loss of performance and defects in materials and workmanship for the luminaires for a period of 5 years after acceptance of the luminaires. Warranty shall cover all components comprising the luminaire.

.3 All warranty documentation shall be provided to customer prior to the first shipment.

.4 LED Luminaires shall have a manufacturer's warranty for a period of not less than five years.

.5 LED boards, drivers and associated components shall have a warranty of 5 years on the LEDs, 5 years on the driver, 10 years on the paint finish.

PART 2 - PRODUCTS

2.1 LUMINAIRES

.1 Provide luminaires in accordance with Schedule of Luminaires found on drawings. Luminaires are to be CSA approved or have special local electrical authority approval.

.2 Where luminaires are noted to be supplied by others, typically lamps (except LEDs) are not included and are to be provided in scope of this Contract.

.3 Provide thickness of metal as indicated in Schedule of Luminaires and details, or as required so that luminaires are rigid, stable and resists deflection, twisting, warping or bending under normal installation procedures, re-lamping etc., or no less than requirements specified herein the specifications.

.4 Unless otherwise noted, linear and continuous linear architectural LED luminaires bodies to be constructed of extruded aluminum and of rigid construction. Unless otherwise noted, provide body finishes of corrosion resistant, chemically treated and electrostatically applied post powder coat finish. Efficiency not to be less than 69%.

.5 Unless otherwise noted, vandal resistant luminaires to be constructed of heavy duty extruded aluminum rails and die cast end caps, complete with stainless steel torx with centre reject pin and Allen head set screws. Screw heads to be mounted and concealed under lens. Lens to be extruded UV stabilized polycarbonate lens with internal linear ribbed design.

.6 Provide neoprene or silicone gasketting, barriers and stops where required to prevent light leaks or water/water vapour penetration.

.7 Fabricate housings to allow for easy accessibility and replacement of parts.

.8 Fabricate fixtures with a minimum number of joints. Make unexposed joints by acceptable method such as welding, brazing, screwing or bolting. Soldered joints are unacceptable. Do not use blind metal tapping methods or rivets for fastening parts which must be removed during service, or for fastening electrical components and supports. Cast parts, including die-cast members, to be of uniform quality, close grained, rigid, true to pattern, free from blow holes, pores, discoloration, hard spots, shrinkage defects, and cracks or other imperfections that affect strength and appearance or are indicative of inferior metals or alloys.

.9 Reflectors and reflecting cones or baffles to be free of any tooling marks, spinning lines or marks by other assembly techniques. Finishes to be equal to first quality polished, baffled and anodised "Alzak".

.10 Lenses and louvres to comply with local governing building code and other local governing code flame spread rating requirements.

.11 Recessed luminaries with replaceable/serviceable parts to be accessible from lens side (ie. room side) of fixtures to allow for proper accessibility.

.12 Luminaires to be factory assembled and tested prior to delivery on site.

.13 Exposed parts and hardware of luminaires located in non-climate controlled areas to be corrosion resistant and weather resistant. Hardware to be tamper-proof.

.14 When requested, submit luminaire samples.

.15 Dimensions for coves, valances, and strips as shown on drawings are for bidding purposes only. Job measure for exact dimensions of louvres, lenses and strips.

.16 Dimensions for linear and continuous linear LED as shown on drawings are for bidding purposes only. Job measure for exact dimensions requirements to suit installation location.

.17 Review exact colours and finishes of luminaires with Consultant after award of contract but prior to ordering. Obtain information in time to meet installation schedule.

.18 Coordinate with LED/driver manufacturers and dimmer/occupancy control manufacturers to ensure that components are compatible with each other and that interconnections do not affect performance, life or any warranties.

.19 Products of same specified type to be of same manufacturer.

2.2 INDOOR LED LUMINAIRES, GENERAL

.1 Initial delivered lumens – thermal losses should be less than 10 per cent when operated at a steady state at an average ambient operating temperature of 25 degrees C, and optical losses should be less than 15 per cent.

.2 Average Delivered Lumens – Average delivered lumens over 50 000 hours should be minimum of 85 per cent of initial delivered lumens.

.3 All luminaires shall be tested per LM79/80 and published L70 data.

.4 Available in 3500 K correlated colour temperature, CRI greater than or equal to 80, or as indicated.

.5 Accessibility and Maintenance:

.1 All LED luminaires shall be field serviceable, with LED arrays, LED modules, drivers, etc. fully serviceable and easily accessible. In the case of recessed ceiling mounted, and in the case of surface mounted ceiling fixtures, these components must be accessible from below. Luminaires in which any of these components are accessible only from above are not acceptable.

.2 Ballasts, drivers, LED arrays, LED modules, and lamps shall be serviceable while the fixture is in its normally installed position. Ballasts or drivers shall not be mounted to removable reflectors or wireway covers unless so specified. In the case of ceiling mounted luminaires, the serviceable components must be accessible from below.

.6 Housings:

.1 Formed to prevent warping and sagging. Housing, trim and lens frame shall be true, straight (unless intentionally curved), and parallel to each other as designed.

.2 Sheet steel housings to be minimum 20 gauge.

.3 Wireways and fittings: free of burrs and sharp edges, and shall accommodate internal and branch circuit wiring without damage to the wiring.

.4 When installed, any exposed fixture housing surface, trim frame, door frame, and lens frame shall be free of light leaks.

.5 Hinged door frames shall operate smoothly without binding. Latches shall function easily by finger action without the use of tools.

.6 Drivers shall not be mounted to removable reflectors or wireway covers unless so specified.

.7 Mechanical Safety: Lighting fixture closures (lens doors, trim frame, hinged housings, etc.) shall be retained in a secure manner by captive screws, chains, aircraft cable, captive hinges, or fasteners such that they cannot be accidentally dislodged during normal operation or routine maintenance.

.8 Metal Finishes:

.1 Fixture finish and construction to meet ULC listings and CSA certifications related to intended installation.

.2 All metal components of fixtures shall be painted after fabrication to mitigate raw metal edges, and thus prevent premature corrosion.

.3 The manufacturer shall apply standard finish (unless otherwise specified) over a corrosion-resistant primer, after cleaning to free the metal surfaces of rust, grease, dirt and other deposits. Edges of pre-finished sheet metal exposed during forming, stamping or shearing processes shall be finished in a similar corrosion resistant manner to match the adjacent surface(s). Fixture finish shall be free of stains or evidence of rusting, blistering, or flaking, and shall be applied after fabrication.

.4 Interior light reflecting finishes shall be white with not less than 85 per cent reflectance, except where otherwise shown on the drawing.

.9 Wiring:

.1 Lighting fixtures shall have a specific means for grounding metallic wireways and housings to an equipment grounding conductor.

.2 Supplied complete with a luminaire disconnect plug.

2.3 DRIVERS, GENERAL

.1 CSA approved, ULC listed and labelled;

.2 Electronic LED drivers shall be integral to the luminaire, and be designed to be accessible in the field for replacement and servicing.

.3 Input Voltage:

.1 Driver with a voltage range of (120-277) +/- 10% or (347-480) +/- 10%.

.2 Refer to lighting fixture schedule.

.3 For luminaires connected to a 347 volt circuit and utilizing a natively 120-277 volt driver, provide an appropriately sized step down transformer.

.4 Input frequency 60 Hz.

.5 Load regulation: +/- 1 per cent from no load to full load.

.6 Output ripple less than 10 per cent.

.7 Output should be isolated.

.8 Case temperature: rated for -40 degrees C through +80 degrees C.

.9 Overheat protection, self-limited short circuit protection and overload protected.

.10 Primary fused.

.11 Driver life rating not less than 50 000 hours

.12 Power Factor and Total Harmonic Distortion

.1 Power factor of greater than or equal to 0.9 at full load.

.2 THD of less than or equal to 20 per cent at full load.

.13 Dimming Control:

.1 Coordinate with Section 26 09 23.

.2 0-10 V dimming control typical for all fixtures unless otherwise noted.

.3 Control range: 10 per cent to 100 per cent typical, unless noted otherwise.

.4 Provide a mock-up to demonstrate the luminaire is free of flicker throughout the dimming range when used with the dimming controllers described in related sections.

2.4 INTERIOR WALL-WASH LED LUMINAIRES

.1 Minimum Light Output: 575 lm.

.2 Zonal lumen density:

.1 Minimum 60 per cent between 0 degrees and 90 degrees from nadir.

.3 Minimum 60 per cent of the lumens must be produced in the “forward” hemisphere, towards the wall.

.4 Minimum luminaire efficacy: 45 lumens per watt.

.5 Correlated Colour Temperature (CCT): 3500 K

2.5 COLOUR RENDITION INDEX (CRI): 80 CRI MINIMUM.

.1 Minimum L70 lumen maintenance to occur at 50 000 hours in accordance with LM-80 testing data and TM-21 extrapolation.

2.6 DOWNLIGHT LUMINAIRES

.1 Minimum Light Output: 500 lm.

.2 Zonal lumen density: Minimum 75 per cent between 0 degrees and 60 degrees from nadir.

.3 Minimum luminaire efficacy: 45 lumens per watt.

.4 Correlated Colour Temperature (CCT): 3500 K

.5 Colour Rendition Index (CRI): 80 CRI minimum.

.6 Minimum L70 lumen maintenance to occur at 50 000 hours in accordance with LM-80 testing data and TM-21 extrapolation.

2.7 LUMINAIRES

.1 In accordance with related sections.

PART 3 - EXECUTION

3.1 VERIFICATION OF CONDITIONS

.1 Coordinate the lighting system installation with the relevant trades so as to eliminate interferences with hangers, mechanical ducts, sprinklers, piping, steel, etc.

3.2 INSTALLATION

.1 Install lighting equipment, including but not limited to luminaires, controls, auxiliary devices and the integration of same in strict conformance with all manufacturers' recommendations and instructions the securing of which shall be the responsibility of the Contractor.

.2 Luminaires shall be integrated with controls in accordance with respective luminaire manufacturers' and controls manufacturers' recommendations and instructions and to provide a complete, trouble-free operation without compromising safety, code and UL/CSA/NOM requirements.

.3 The Contractor shall coordinate the lighting system installation with the relevant trades so as to eliminate interferences with hangers, mechanical ducts, sprinklers, pipes, steel, etc.

.4 For installation in suspended ceilings, ensure that the luminaires are supported such that there is no resultant bowing or deflection of the ceiling system greater than 1/360 of the length of the total span of the ceiling member.

.5 Mounting heights and configuration of the luminaires shall be as specified in the Luminaire Schedule portion of the Specification or indicated on the drawings, and where conflicts exist, as approved by the Consultant.

.6 All luminaires shall be installed plumb and true and level as viewed from all directions unless specifically identified otherwise in the Luminaire Schedule. Luminaires shall remain plumb and true without continual adjustment or visibly obvious means beyond what is shown on luminaire submittal drawings.

.7 Suspended luminaires shall be installed plumb and true and level unless specifically identified otherwise in the Luminaire Schedule portion of this Specification and at a height from finished floor as specified on the drawings, details and Luminaire Schedule. In cases where this is impractical, refer to the Consultant for a decision. All appurtenances shall be consistently organized for a neat, uniform appearance.

.8 Luminaire finishes which are disturbed in any way during construction shall be touched up or refinished in a manner satisfactory to the Consultant.

.9 Reflector cones, louvers, baffles, lenses, trims and other decorative elements shall be installed after completion of ceiling tile installation, plastering, painting and general cleanup.

.10 Whenever a luminaire or its hanger canopy is installed directly to a surface mounted junction box, a finishing ring painted to match the ceiling, shall be used to conceal the junction box.

.11 All lamps shall be seasoned for a minimum of 12 hours and a maximum of 100 hours in full-on mode without dimming. All lamps used for convenience lighting during construction shall be replaced with identical new lamps, which shall then be seasoned as described above, immediately prior to the date of substantial completion as determined by the Consultant.

.12 All accessories shall be properly installed and adjusted by Contractor in accordance with specification and installation instructions. Any spare items shall be clearly labeled (indicate type of accessory and associated luminaire types).

.13 Locate and install luminaires as indicated.

.14 Provide adequate support to suit ceiling system.

.15 For fluorescent lighting, provide instant start ballasts for all areas with no occupancy sensors and program rapid start in areas with occupancy sensors.

.16 Install suspended luminaires and exit signs using pendants supported from swivel hangers. Provide pendant length required to suspend luminaire at indicated height.

.17 Install recessed luminaires using accessories and firestopping materials to meet regulatory requirements for fire rating.

.18 Install clips to secure recessed grid-supported luminaires in place.

.19 Install wall mounted luminaires at height as indicated.

.20 Install accessories provided with each luminaire.

.21 Install specified lamps in luminaire.

.22 Clean and re-lamp existing luminaires to be reused.

.23 Check lighting luminaires and mountings for their electrical and physical characteristics in relation to conditions due to building construction and mechanical equipment. Make necessary adjustments to luminaires or hanging arrangement without expense to Owners. Give notification at time of shop drawings and before construction if decision on necessary changes is required.

.24 Do not mount luminaires above pipes, ducts or equipment. In event of unavoidably tight locations, provide hangers to clear obstruction. Check layouts of other trades on job and plan co-operatively. Luminaires in any room shall hang at one height. Obtain approval before any changes are made to layouts shown.

.1 Existing luminaires designated to be relocated and reused, to be:

.1 disconnected, removed and stored in a safe area as designated by Owner and reviewed with Consultant until ready for re-installation;

.2 inspected, cleaned, repaired and re-lamped;

.3 identified to Consultant of requirement for replacement parts for broken lenses, faulty ballasts, broken mounting hardware, etc., as necessary to return luminaires to good working condition; identify cost to Consultant for repair/replacement parts.

.25 Provide seismic restraints to suspended luminaires, in accordance with latest local governing building code requirements.

.26 Provide dimming drivers/ballasts in luminaries to be dimmed. Coordinate between dimming system vendor and luminaire vendors to ensure 100% compatibility.

.27 Ground and bond luminaires as per local governing electrical code requirements.

3.3 TESTING AND ADJUSTMENT

.1 As required, all adjustable luminaires shall be aimed, focused, locked, etc., by the Contractor under the observation of the Consultant. As aiming and adjusting is completed, locking setscrews and bolts and nuts shall be tightened securely by the Contractor.

.2 All ladders, scaffolds, lifts, etc. required for aiming and adjusting luminaires shall be furnished by the Contractor.

.3 Where possible, units shall be focused during the normal working day. However, where daylight interferes with seeing lighting effects, aiming shall be accomplished at night.

3.4 WIRING

.1 Install luminaire disconnect plugs on all new luminaires not provided as such from the manufacturer.

.2 Connect luminaires to branch circuit outlets provided under Section 26 05 33.13 using flexible conduit.

.3 Make wiring connections to branch circuit using building wire with insulation suitable for temperature conditions within luminaire.

.4 Bond products and metal accessories to branch circuit equipment grounding conductor.

3.5 LUMINAIRE SUPPORTS

.1 Provide adequate support to suit ceiling system.

.2 Support luminaires independently of ceiling framing, unless ceiling is certified by the manufacturer to support weight of installed devices. Confirm if T-bar ceilings are metric or imperial and provide luminaires to suit ceiling dimensions.

.3 Provide chain hangers for new and existing luminaires.

.4 Install clips to secure recessed grid supported luminaires in place.

.5 Fixtures supported by suspended ceiling systems shall be securely fastened to the ceiling framing member by mechanical means, such as bolts, screws, or rivets. Ceiling framing members must be securely attached to each other and to the building structure as required by all applicable codes and standards. Use of integral clips is not acceptable.

3.6 LUMINAIRE ALIGNMENT

.1 Locate recessed ceiling luminaires as indicated on reflected ceiling plan. Recessed luminaires shall be installed to permit removal from below. Include accessories and materials to meet applicable codes and regulatory requirements.

.2 Align luminaires mounted in continuous rows to form straight uninterrupted line.

.3 Align luminaires mounted individually parallel or perpendicular to building grid lines.

.4 Install surface mounted luminaires plumb and adjust to align with building lines and with each other. Secure to prevent movement.

3.7 FIELD QUALITY CONTROL

.1 Operate each luminaire after installation and connection. Inspect for proper connection and operation.

.2 Wiring connections to the branch circuit shall be made using building wire with insulation suitable for temperature conditions within luminaire.

.3 Fixtures supported by suspended ceiling systems shall be securely fastened to the ceiling framing member by mechanical means, such as bolts, screws, or rivets. Ceiling framing members must be securely attached to each other and to the building structure as required by all applicable codes and standards. Use of integral clips is not acceptable.

.4 Occupancy Sensors

.1 Locate and aim sensors in the correct location required for complete and proper volumetric coverage within the range of coverage(s) of controlled areas.

.2 Rooms shall have 90 per cent to 100 per cent coverage to completely cover the controlled area to accommodate all occupancy habits of single or multiple occupants at any location within the room(s).

.3 Exercise proper judgment in executing the work to ensure the best possible installation in the available space and to overcome local difficulties due to space limitations or interference of structural components.

3.8 CLEANING

.1 All luminaires and accessories shall be thoroughly cleaned after being installed. All fingerprints, dirt, tar, smudges, drywall mud and dust, etc. shall be removed by the Contractor from the luminaire bodies, reflectors, trims, and lens or louvers prior to final acceptance. All reflectors shall be free of

paint other than factory-applied, if any. All reflectors, cones and lenses shall be cleaned only according to manufacturers' instructions.

.2 Clean electrical parts to remove conductive and deleterious materials.

.3 Remove dirt and debris from enclosures.

.4 Clean photometric control surfaces as recommended by manufacturer.

.5 Clean finishes and touch up damage.

.6 Luminaire finishes which are disturbed in any way during construction shall be touched up or refinished in a manner satisfactory to the Consultant.

3.9 PROTECTION OF FINISHED WORK

.1 Re-lamp luminaires that have failed lamps.

.2 Re-lamp luminaires used for temporary lighting at Substantial Completion.

3.10 COMMISSIONING

.1 Measure samples of each new luminaire type to be replaced as described in PART 1 of this section for demonstration of energy savings.

.2 Sensor placement and orientation for all sensor types.

.3 Occupancy sensor function, sensitivity, and time delays.

.4 Manual control placement and operation.

.5 Automated control operation, including scheduled on/off functions and dimming trims and presets.

.6 Override operation, access, and functionality.

.7 Centralized control interfaces and operation.

.8 Documentation archived to client.

END OF SECTION

PART 1 - GENERAL

1.1 SECTION INCLUDES

.1 Solid state, light emitting diode (LED) source interior luminaires.

.2 New, fully integrated luminaires for indoor applications.

1.2 RELATED REQUIREMENTS

.1 Section 26 09 23 – Lighting Control Devices.

.2 Section 26 52 13.13 – Emergency Lighting.

1.3 REFERENCES

.1 CSA Group:

.1 CSA C22.1:24, Canadian Electrical Code, Part 1 (26th Edition), Safety Standard for Electrical Installations.

.2 Ontario Electrical Safety Code (29th edition/2024).

.3 CSA C22.2 No. 250.0 - Luminaires (Bi-National Standard, with UL 1598).

.2 DesignLights Consortium (DLC):

.1 Solid-State Lighting Technical Requirements v5.1, or latest edition.

.2 Where the specifications do not explicitly call for DLC qualified LED luminaires, the technical criteria provided in the DLC Technical Requirements provide the basis of the requirements for this section of the Specification.

.3 Energy Star:

.1 Program Requirements for Luminaires - Eligibility Criteria, Version 1.2, or latest edition.

.4 Illuminating Engineering Society (IES):

.1 IES HB-10-11 – The Lighting Handbook, 10th Edition.

.2 IES LM-79-08 – Approved Method: Electrical and Photometric Measurements of Solid-State Lighting Products.

.3 IES LM-80-08 – IES Approved Method for Measuring Lumen Maintenance of LED Light Sources.

.4 IES TM-21-11 – IES Technical Memorandum on Projecting Long Term Lumen Maintenance of LED Light Sources.

.5 IES TM-30-15 – IES Method for Evaluating Light Source Color Rendition.

.5 IEEE 1789-2015 – IEEE Recommended Practices for Modulating Current in High-Brightness LEDs for Mitigating Health Risks to Viewers.

.6 National Electrical Manufacturer’s Association (NEMA):

.1 SSL-1-10 – Electronic Drivers for LED Devices, Arrays, or Systems.

.2 WD 6 - Wiring Devices - Dimensional Requirements.

1.4 DEFINITIONS

.1 CCT: Correlated colour temperature.

.2 CRI: Colour-rendering index.

.3 LED: Light Emitting Diode.

.4 Lumen: Measured output of lamp and luminaire, or both.

.5 Luminaire: Complete lighting fixture, including ballast housing if provided.

1.5 ACTION SUBMITTALS

.1 Refer to Section 01 33 00.

.2 [Manufacturer reports: Provide a point-by-point photometric analysis of the [pool] [all areas], in accordance with the procedures laid out in IES recommended practices to demonstrate compliance with OBC [and LTC design manual] illumination requirements as described in 2012 OBC 3.11.10.1.(3)(a)(i).]

.3 [Manufacturer reports: Provide a point-by-point photometric analysis of [all areas of the Long Term Care home], in accordance with the procedures laid out in IES recommended practices to demonstrate compliance with OBC illumination requirements as described in 2012 OBC 3.11.10.1.(3)(a)(i) and the LTC Design Manual.]

.4 [Manufacturer reports: Provide a point-by-point photometric analysis of the [parking garage], in accordance with the procedures laid out in IES recommended practices to demonstrate compliance with OBC and municipal parking garage illumination requirements.]

.5 Product submittals shall be accompanied by product specification sheets or other documentation that includes the designed parameters as detailed in this specification. These parameters include (but not limited to):

.1 Maximum power in Watts.

.1 If a transformer is used in conjunction with a driver (for example on some 347 volt lighting circuits), the maximum power shall include the transformer losses.

.2 L70 in hours, when extrapolated for the worse case operating temperature. TM-21 report shall be submitted to demonstrate this.

.3 Product submittals shall be accompanied by performance data that is derived in accordance with appropriate IESNA testing standards and tested in a laboratory that is NVLAP accredited for Energy Efficient Lighting Products.

1.6 INFORMATIONAL SUBMITTALS

.1 Installation instructions.

1.7 CLOSEOUT SUBMITTALS

.1 Section 01 78 00: Submittals for project closeout.

.2 Submit manufacturer's operation and maintenance instructions for each product.

.3 Warranty information.

1.8 QUALIFICATIONS

.1 Manufacturer: Company specializing in manufacturing the products specified in this section with minimum five years documented experience.

1.9 REGULATORY REQUIREMENTS

.1 Products shall be listed and classified by CSA (Canadian Standards Association), ULC (Underwriter’s Laboratories of Canada), or certified by recognized independent testing organizations that test to CSA standards.

.2 Products shall be certified by a recognized testing agency accredited by the Standards Council of Canada and bear a certification mark from that agency.

.3 All luminaires shall be listed and labeled for installation in fireproof or non-fireproof construction, dry, damp, or wet locations as required.

.4 Recessed fixtures mounted in an insulated ceiling shall be listed for use in insulated ceilings.

1.10 DELIVERY, STORAGE, AND HANDLING

.1 Deliver, store and handle materials in accordance with Section 01 61 00.

.2 Deliver materials to site in original factory packaging, labelled with manufacturer's name, address.

1.11 EXTRA STOCK MATERIALS

.1 Refer to Section 01 78 00.

.2 Provide the following additional equipment as listed herein.

.1 Provide an additional 2 per cent spare luminaires of each new type to be provided.

.2 Provide 1 per cent of each plastic lens type.

.3 Provide three of each type of any special tools required for system use and maintenance.

1.12 WARRANTY

.1 Refer to Section 01 78 00 and Section 26 05 00.

.2 The manufacturer shall provide a warranty against loss of performance and defects in materials and workmanship for the luminaires for a period of 5 years after acceptance of the luminaires. Warranty shall cover all components comprising the luminaire.

.3 All warranty documentation shall be provided to customer prior to the first shipment.

.4 LED Luminaires shall have a manufacturer’s warranty for a period of not less than five years.

.5 LED boards, drivers and associated components shall have a warranty of 5 years on the LEDs, 5 years on the driver, 10 years on the paint finish.

PART 2 - PRODUCTS

2.1 MANUFACTURERS

.1 As noted on Lighting Fixture Schedule.

2.2 INDOOR LED LUMINAIRES, GENERAL

.1 Initial delivered lumens – thermal losses should be less than 10 per cent when operated at a steady state at an average ambient operating temperature of 25 degrees C, and optical losses should be less than 15 per cent.

.2 Average Delivered Lumens – Average delivered lumens over 50 000 hours should be minimum of 85 per cent of initial delivered lumens.

.3 All luminaires shall be tested per IES LM-79 and IES LM-80, and inlcude published L70 data.

.4 Colour rendition:

.1 Interior luminaires with a CRI greater than or equal to [80] [90], or as indicated on the lighting fixture schedule.

.2 Where minimum 90 CRI is indicated, the following may be considered acceptable in lieu, subject to confirmation with the Consultant by means of a Request for Interpretation during the bid period:

.1 CRI (Ra) ≥ 90.

.2 CRI (Ra) ≥ 80 and R9 (R9) ≥ 50.

.3 IES Rf ≥ 78, IES Rg ≥ 100, -1% ≤ IES Rcs,h1 ≤ 15%.

.5 [Correlated colour temperature as indicated on the lighting fixture schedule.]

.6 Accessibility and Maintenance:

.1 All LED luminaires shall be field serviceable, with LED arrays, LED modules, drivers, etc. fully serviceable and easily accessible. In the case of recessed ceiling mounted, and in the case of surface mounted ceiling fixtures, these components must be accessible from below. Luminaires in which any of these components are accessible only from above are not acceptable.

.2 Ballasts, drivers, LED arrays, LED modules, and lamps shall be serviceable while the fixture is in its normally installed position. Ballasts or drivers shall not be mounted to removable reflectors or wireway covers unless so specified. In the case of ceiling mounted luminaires, the serviceable components must be accessible from below.

.7 Housings:

.1 Formed to prevent warping and sagging. Housing, trim, and lens frame shall be true, straight (unless intentionally curved), and parallel to each other as designed.

.2 Sheet steel housings to be minimum 20 gauge.

.3 Wireways and fittings: free of burrs and sharp edges, and shall accommodate internal and branch circuit wiring without damage to the wiring.

.4 When installed, any exposed fixture housing surface, trim frame, door frame, and lens frame shall be free of light leaks.

.5 Hinged door frames shall operate smoothly without binding. Latches shall function easily by finger action without the use of tools.

.6 Drivers shall not be mounted to removable reflectors or wireway covers unless so specified.

.8 Mechanical Safety: Lighting fixture closures (lens doors, trim frame, hinged housings, etc.) shall be retained in a secure manner by captive screws, chains, aircraft cable, captive hinges, or fasteners such that they cannot be accidentally dislodged during normal operation or routine maintenance.

.9 Metal Finishes:

.1 Fixture finish and construction to meet ULC listings and CSA certifications related to intended installation.

.2 All metal components of fixtures shall be painted after fabrication to mitigate raw metal edges, and thus prevent premature corrosion.

.3 The manufacturer shall apply standard finish (unless otherwise specified) over a corrosion-resistant primer, after cleaning to free the metal surfaces of rust, grease, dirt, and other deposits. Edges of pre-finished sheet metal exposed during forming, stamping, or shearing processes shall be finished in a similar corrosion resistant manner to match the adjacent surface(s). Fixture finish shall be free of stains or evidence of rusting, blistering, or flaking, and shall be applied after fabrication.

.4 Interior light reflecting finishes shall be white with not less than 85 per cent reflectance, except where otherwise shown on the drawing.

.10 Wiring:

.1 Lighting fixtures shall have a specific means for grounding metallic wireways and housings to an equipment grounding conductor.

.2 Supplied complete with a luminaire disconnect plug.

.11 Control of Visual Perceptions of Temporal Light Modulation (flicker):

.1 All electric lights (except decorative lights, emergency lights and other special-purpose lighting) used in regularly occupied spaces meet at least one of the following requirements for flicker:

.1 A minimum frequency of 90 Hz at all 10% intervals from 10% to 100% light output.

.2 LED products with a “low risk” level of flicker (light modulation) of less than 5%, especially below 90 Hz operation as defined by IEEE standard 1789-2015 LED.

2.3 DRIVERS, GENERAL

.1 Electronic LED drivers shall be integral to the luminaire, and be designed to be accessible in the field for replacement and servicing.

.2 Input Voltage:

.1 Driver with a voltage range of (120-277) ±10% or (347-480) ±10%.

.2 Refer to lighting fixture schedule.

.3 For luminaires connected to a 347 volt circuit and utilizing a natively 120-277 volt driver, provide an appropriately sized step down transformer.

.3 Input frequency 60 Hz.

.4 Load regulation: ±1 per cent from no load to full load.

.5 Output ripple less than 10 per cent.

.6 Output should be isolated.

.7 Case temperature: rated for -40°C through +80°C.

.8 Overheat protection, self-limited short circuit protection and overload protected.

.9 Primary fused.

.10 Driver life rating not less than 50 000 hours

.11 Power Factor and Total Harmonic Distortion

.1 Power factor of greater than or equal to 0.9 at full load.

.2 THD of less than or equal to 20 per cent at full load.

.12 Dimming Control:

.1 Coordinate with Section 26 09 23.

.2 0-10 V dimming control typical for all fixtures unless otherwise noted.

.3 Control range: 10 per cent to 100 per cent typical, unless noted otherwise.

.4 Provide a mock-up to demonstrate the luminaire is free of flicker throughout the dimming range when used with the dimming controllers described in related sections.

2.4 INTERIOR WALL-WASH LED LUMINAIRES

.1 Minimum Light Output: 575 lm.

.2 Zonal lumen density:

.1 Minimum 60 per cent between 0 degrees and 90 degrees from nadir.

.2 Minimum 60 per cent of the lumens must be produced in the “forward” hemisphere, towards the wall.

.3 Minimum luminaire efficacy: 45 lumens per watt.

.4 Correlated Colour Temperature (CCT): 3500 K.

.5 Colour Rendition Index (CRI): 80 CRI minimum.

.6 Minimum L70 lumen maintenance to occur at 50 000 hours in accordance with IES LM-80 testing data and IES TM-21 extrapolation.

2.5 TRACK OR MONO-POINT DIRECTIONAL LED LUMINAIRES

.1 Minimum Light Output: 250 lm.

.2 Zonal lumen density:

.1 Minimum 85 per cent between 0 degrees and 90 degrees from nadir.

.3 Minimum luminaire efficacy: 45 lumens per watt.

.4 Correlated Colour Temperature (CCT): 3500 K.

.5 Colour Rendition Index (CRI): 80 CRI minimum.

.6 Minimum L70 lumen maintenance to occur at 50 000 hours in accordance with IES LM-80 testing data and IES TM-21 extrapolation.

2.6 DOWNLIGHT LUMINAIRES

.1 Minimum Light Output: 500 lm.

.2 Zonal lumen density: Minimum 75 per cent between 0 degrees and 60 degrees from nadir.

.3 Minimum luminaire efficacy: 45 lumens per watt.

.4 Correlated Colour Temperature (CCT): 3500 K.

.5 Colour Rendition Index (CRI): 80 CRI minimum.

.6 Minimum L70 lumen maintenance to occur at 50 000 hours in accordance with IES LM-80 testing data and IES TM-21 extrapolation.

2.7 NOMINAL 610 MM BY 610 MM (2 FT BY 2 FT) LUMINAIRES FOR AMBIENT LIGHTING OF INTERIOR SPACES

.1 Minimum Light Output: 2 000 lm.

.2 Zonal lumen density:

.1 Minimum 75 per cent between 0 degrees and 60 degrees from nadir.

.3 Spacing Criteria:

.1 0 degrees to 180 degrees: 1.0 to 2.0

.2 90 degrees to 270 degrees: 1.0 to 2.0

.4 Minimum luminaire efficacy: 85 lumens per watt.

.5 Correlated Colour Temperature (CCT): 3500 K.

.6 Colour Rendition Index (CRI): 80 CRI minimum.

.7 Minimum L70 lumen maintenance to occur at 50 000 hours in accordance with IES LM-80 testing data and IES TM-21 extrapolation.

2.8 NOMINAL 305 MM BY 1220 MM (1 FT BY 4 FT) LUMINAIRES FOR AMBIENT LIGHTING OF INTERIOR SPACES

.1 Minimum Light Output: 1 500 lm.

.2 Zonal lumen density:

.1 Minimum 75 per cent between 0 degrees and 60 degrees from nadir.

.3 Spacing Criteria:

.1 0 degrees to 180 degrees: 1.0 – 2.0

.2 90 degrees to 270 degrees: 1.0 – 2.0

.4 Minimum luminaire efficacy: 85 lumens per watt.

.5 Correlated Colour Temperature (CCT): 3500 K.

.6 Colour Rendition Index (CRI): 80 CRI minimum.

.7 Minimum L70 lumen maintenance to occur at 50 000 hours in accordance with IES LM-80 testing data and IES TM-21 extrapolation.

2.9 NOMINAL 610 MM BY 1220 MM (2 FT BY 4 FT) LUMINAIRES FOR AMBIENT LIGHTING OF INTERIOR SPACES

.1 Minimum Light Output: 3 000 lm.

.2 Zonal lumen density:

.1 Minimum 75 per cent between 0 degrees and 60 degrees from nadir.

.3 Spacing Criteria:

.1 0 degrees to 180 degrees: 1.0 – 2.0

.2 90 degrees to 270 degrees: 1.0 – 2.0

.4 Minimum luminaire efficacy: 85 lumens per watt.

.5 Correlated Colour Temperature (CCT): 3500 K.

.6 Colour Rendition Index (CRI): 80 CRI minimum.

.7 Minimum L70 lumen maintenance to occur at 50 000 hours in accordance with IES LM-80 testing data and IES TM-21 extrapolation.

2.10 LINEAR AMBIENT LUMINAIRES: INDIRECT

.1 Minimum Light Output: 500 lm per foot.

.2 Zonal lumen density:

.1 Minimum 50 per cent between 90 degrees and 150 degrees from nadir.

.3 Minimum luminaire efficacy: 85 lumens per watt.

.4 Correlated Colour Temperature (CCT): 3500 K.

.5 Colour Rendition Index (CRI): 80 CRI minimum.

.6 Minimum L70 lumen maintenance to occur at 50 000 hours in accordance with IES LM-80 testing data and IES TM-21 extrapolation.

2.11 LINEAR AMBIENT LUMINAIRES: INDIRECT/DIRECT

.1 Minimum Light Output: 500 lm per foot.

.2 Zonal lumen density:

.1 Minimum 25 per cent between 0 degrees and 60 degrees from nadir.

.2 Minimum 50 per cent between 90 degrees and 150 degrees from nadir.

.3 Minimum luminaire efficacy: 85 lumens per watt.

.4 Correlated Colour Temperature (CCT): 3500 K.

.5 Colour Rendition Index (CRI): 80 CRI minimum.

.6 Minimum L70 lumen maintenance to occur at 50 000 hours in accordance with IES LM-80 testing data and IES TM-21 extrapolation.

2.12 LINEAR AMBIENT LUMINAIRES: DIRECT/INDIRECT

.1 Minimum Light Output: 500 lm per foot.

.2 Zonal lumen density:

.1 Minimum 40 per cent between 0 degrees and 60 degrees from nadir.

.2 Minimum 35 per cent between 90 degrees and 150 degrees from nadir.

.3 Minimum luminaire efficacy: 85 lumens per watt.

.4 Correlated Colour Temperature (CCT): 3500 K.

.5 Colour Rendition Index (CRI): 80 CRI minimum.

.6 Minimum L70 lumen maintenance to occur at 50 000 hours in accordance with IES-LM-80 testing data and IES TM-21 extrapolation.

2.13 LINEAR AMBIENT LUMINAIRES: DIRECT

.1 Minimum Light Output: 375 lm per foot.

.2 Zonal lumen density:

.1 Minimum 40 per cent between 0 degrees and 60 degrees from nadir.

.3 Minimum luminaire efficacy: 85 lumens per watt.

.4 Correlated Colour Temperature (CCT): 3500 K.

.5 Colour Rendition Index (CRI): 80 CRI minimum.

.6 Minimum L70 lumen maintenance to occur at 50 000 hours in accordance with IES LM-80 testing data and IES TM-21 extrapolation.

2.14 HIGH-BAY LUMINAIRES FOR COMMERCIAL AND INDUSTRIAL BUILDINGS

.1 Minimum Light Output: 10 000 lm.

.2 Zonal lumen density:

.1 Minimum 30 per cent between 20 degrees and 50 degrees from nadir.

.3 Minimum luminaire efficacy: 80 lumens per watt.

.4 Correlated Colour Temperature (CCT): 4000 K.

.5 Colour Rendition Index (CRI): 70 CRI minimum.

.6 Minimum L70 lumen maintenance to occur at 35 000 hours in accordance with IES LM-80 testing data and IES TM-21 extrapolation.

2.15 LOW-BAY LUMINAIRES FOR COMMERCIAL AND INDUSTRIAL BUILDINGS

.1 Minimum Light Output: 5 000 lm.

.2 Zonal lumen density:

.1 Minimum 30 per cent between 20 degrees and 50 degrees from nadir.

.3 Minimum luminaire efficacy: 80 lumens per watt.

.4 Correlated Colour Temperature (CCT): 4000 K.

.5 Colour Rendition Index (CRI): 70 CRI minimum.

.6 Minimum L70 lumen maintenance to occur at 35 000 hours in accordance with IES LM-80 testing data and IES TM-21 extrapolation.

2.16 HIGH-BAY AISLE LUMINAIRES

.1 Minimum Light Output: 10 000 lm.

.2 Zonal lumen density:

.1 Minimum 30 per cent between 0 degrees and 20 degrees from nadir.

.2 Minimum 50 per cent between 20 degrees and 50 degrees from nadir.

.3 Minimum luminaire efficacy: 80 lumens per watt.

.4 Correlated Colour Temperature (CCT): 4000 K.

.5 Colour Rendition Index (CRI): 70 CRI minimum.

.6 Minimum L70 lumen maintenance to occur at 35 000 hours in accordance with IES LM-80 testing data and IES TM-21 extrapolation.

PART 3 - EXECUTION

3.1 VERIFICATION OF CONDITIONS

.1 Coordinate the lighting system installation with the relevant trades so as to eliminate interferences with hangers, mechanical ducts, sprinklers, piping, steel, etc.

3.2 INSTALLATION

.1 Install lighting equipment, including but not limited to luminaires, controls, auxiliary devices and the integration of same in strict conformance with all manufacturers' recommendations and instructions the securing of which shall be the responsibility of the Contractor.

.2 Integrate luminaires with controls in accordance with respective luminaire manufacturers' and controls manufacturers' recommendations and instructions and to provide a complete, trouble-free operation without compromising safety, code and CSA requirements.

.3 Seal all luminaires for wet locations (i.e. all knock-outs, all pipe and wire entrances, etc.) as is standard industry practice to prevent water from entering luminaires.

.4 Luminaire Alignment:

.1 Locate recessed ceiling luminaires as indicated on reflected ceiling plan. Install recessed luminaires to permit removal from below. Include accessories and materials to meet applicable codes and regulatory requirements.

.2 Align luminaires mounted in continuous rows to form straight uninterrupted line.

.3 Align luminaires mounted individually parallel or perpendicular to building grid lines.

.4 Install surface mounted luminaires plumb and adjust to align with building lines and with each other. Secure to prevent movement.

.5 Locate and install luminaires as indicated. Mounting heights and configuration of the luminaires shall be as specified in the Luminaire Schedule portion of the Specification or indicated on the drawings, and where conflicts exist, as approved by the Consultant.

.6 Installed all luminaires plumb and true and level as viewed from all directions unless specifically identified otherwise in the Lighting Fixture Schedule. Luminaires shall remain plumb and true without continual adjustment or visibly obvious means beyond what is shown on luminaire submittal drawings.

.7 For installation in suspended ceilings, ensure that the luminaires are supported such that there is no resultant bowing or deflection of the ceiling system greater than 1/360 of the length of the total span of the ceiling member.

.5 Install recessed luminaires using accessories and firestopping materials to meet regulatory requirements for fire rating.

.6 Whenever a luminaire or its hanger canopy is installed directly to a surface mounted junction box, use a finishing ring painted to match the ceiling to conceal the junction box.

.7 Suspended Luminaires:

.1 Install suspended luminaires and exit signs using pendants supported from swivel hangers. Provide pendant length required to suspend luminaire at indicated height.

.2 Suspended luminaires shall be installed plumb and true and level unless specifically identified otherwise in the Luminaire Schedule portion of this Specification and at a height from finished floor as specified on the drawings, details and Luminaire Schedule. In cases where this is impractical, refer to the Consultant for a decision. All appurtenances shall be consistently organized for a neat, uniform appearance.

.8 Install wall mounted luminaires at height as indicated.

.1 [For wall mounted luminaires in parking garage ramps, install luminaires with the underside of light fixture 2.2 m above top of slab (TOS). Elevation of luminaires to follow the slope of the ramp.]

.9 Accessories:

.1 Reflector cones, louvers, baffles, lenses, trims and other decorative elements shall be installed after completion of ceiling tile installation, plastering, painting and general cleanup.

.2 Install accessories provided with each luminaire.

.3 All accessories shall be properly installed and adjusted by Contractor in accordance with specification and installation instructions. Any spare items shall be clearly labeled (indicate type of accessory and associated luminaire types).

3.3 TESTING AND ADJUSTMENT

.1 As required, all adjustable luminaires shall be aimed, focused, locked, etc., by the Contractor under the observation of the Consultant. As aiming and adjusting is completed, locking setscrews and bolts and nuts shall be tightened securely by the Contractor.

.2 For luminaires with field selectable lumen output and/or CCT, ensure the correct setting matches the intended set points.

.3 All ladders, scaffolds, lifts, etc. required for aiming and adjusting luminaires shall be furnished by the Contractor.

.4 Where possible, units shall be focused during the normal working day. However, where daylight interferes with seeing lighting effects, aiming shall be accomplished at night.

3.4 LUMINAIRE SUPPORTS

.1 Provide adequate support to suit ceiling system.

.2 Support luminaires independently of ceiling framing, unless ceiling is certified by the manufacturer to support weight of installed devices. Confirm if T-bar ceilings are metric or imperial and provide luminaires to suit ceiling dimensions.

.3 Provide chain hangers for new and existing luminaires.

.4 Install clips to secure recessed grid-supported luminaires in place.

.5 Fixtures supported by suspended ceiling systems shall be securely fastened to the ceiling framing member by mechanical means, such as bolts, screws, or rivets. Ceiling framing members must be securely attached to each other and to the building structure as required by all applicable codes and standards. Use of integral clips is not acceptable.

3.5 WIRING

.1 Use SPC90 conductors for final connections to luminaires (including 0-10 V dimming conductors for applicable luminaires).

.2 Install luminaire disconnect plugs on all new luminaires not provided as such from the manufacturer.

.3 Connect luminaires to branch circuit outlets provided under Section 26 05 33.13 using flexible conduit.

.4 Make wiring connections to branch circuit using building wire with insulation suitable for temperature conditions within luminaire.

.5 Bond products and metal accessories to branch circuit equipment grounding conductor.

3.6 FIELD QUALITY CONTROL

.1 Operate each luminaire after installation and connection. Inspect for proper connection and operation.

.2 Make wiring connections to the branch circuit using building wire with insulation suitable for temperature conditions within luminaire.

.3 Occupancy Sensors.

.1 Locate and aim sensors in the correct location required for complete and proper volumetric coverage within the range of coverage(s) of controlled areas.

.2 Rooms shall have 90 per cent to 100 per cent coverage to completely cover the controlled area to accommodate all occupancy habits of single or multiple occupants at any location within the room.

.3 Exercise proper judgment in executing the work to ensure the best possible installation in the available space and to overcome local difficulties due to space limitations or interference of structural components.

3.7 CLEANING

.1 Thoroughly clean all luminaires and accessories after installation. All fingerprints, dirt, tar, smudges, drywall mud, dust, etc. shall be removed by the Contractor from the luminaire bodies, reflectors, trims, and lens or louvers prior to final acceptance. All reflectors shall be free of paint other than factory-applied, if any. All reflectors, cones and lenses shall be cleaned only according to manufacturers' instructions.

.2 Clean electrical parts to remove conductive and deleterious materials.

.3 Remove dirt and debris from enclosures.

.4 Clean photometric control surfaces as recommended by manufacturer.

.5 Clean finishes and touch up damage.

.6 Luminaire finishes which are disturbed in any way during construction shall be touched up or refinished in a manner satisfactory to the Consultant.

3.8 COMMISSIONING

.1 In accordance with Section 26 08 50.

END OF SECTION

PART 1 - GENERAL

1.1 CONDITIONS AND REQUIREMENTS

.1 Refer to the General Conditions, Supplementary General Conditions, and General Requirements.

.2 Provisions of this Section shall apply to all Sections of Division 27.

.3 Refer to Consultant's drawings for exact location of electrical equipment and devices. Refer to Designer drawings for additional notes which complement these specifications.

.4 The Division 26 specification documents shall be followed in conjunction with the specification in this section.

.5 Coordinate with the Division 26 contractor (hereafter referred to as the "electrical contractor").

1.2 RELATED DIVISIONS

.1 Division 26 – Electrical.

1.3 INTENT

.1 Include all material, labour, equipment, and plant construction as necessary to make a complete installation as shown and specified hereinafter. Sections of this specification are not intended to delegate functions nor to delegate work and supply to any specific Trade. It shall be your responsibility to ensure that the systems specified hereafter are complete and operative.

1.4 CODES AND STANDARDS

.1 The equipment, material and installation shall conform to the latest version of the applicable Codes, Standards (including technical service bulletins and addenda) and regulations of authorities having jurisdiction.

.2 Work for PACS, KIDNET and Telephone network systems shall where applicable comply with the latest editions of the following listed in this section.

.3 BICSI

.1 Telecommunications Distribution Methods Manual

.2 Cabling Installation Manual

.3 Outside Plant Manual

.4 Canadian Standards Association (CSA)

.1 CSA C22.1 – Canadian Electrical Code, Part 1

.2 CSA T529 – Commercial Building Telecommunications Cabling Standard (ANSI/EIA/TIA-568-B).

.3 CSA T530 – Commercial Building Standard For Telecommunications Pathways And Spaces (TIA/EIA 569-A).

.4 CSA T528 – Administration Standard For The Telecommunications Infrastructure Of Commercial Buildings (ANSI/EIA/TIA-606).

.5 CSA T527 – Commercial Building Grounding and Bonding Requirements For Telecommunications (ANSI/EIA/TIA-607).

.6 CSA C22.2 No. 214 – Communications Cables.

.7 CSA C22.2 No. 232-M – Fibre Optic Cables.

.8 CSA C22.2 No. 182.4-M90 – Plugs, Receptacles, and Connectors for Communication Systems.

.5 ANSI/TIA-568-C., family of Telecommunications Standards, including: TIA/EIA-568-B.1 – Commercial Building Telecommunications Cabling Standard

.1 ANSI/TIA-568-C.0 - Generic Telecommunications Cabling for Customer Premises;

.2 ANSI/TIA-568-C.1 - Commercial Building Telecommunications Cabling Standard;

.3 ANSI/TIA-568-C.2 - Balanced Twisted-Pair Telecommunication Cabling and Components Standard;

.4 ANSI/TIA-568-C.3 - Optical Fiber Cabling Components Standard;

.5 Issued addenda.

.6 ISO

.1 ISO/IEC IS 11801A – Generic Cabling for Customer Premises.

.7 CENELEC EN 50173 – Performance Requirements for Generic Cabling Schemes.

.8 IEC

.1 IEC 603-7, PART 7 – Detailed Specification For Connectors, 8-Way, Including Fixed And Free Connectors With Common Mating Features.

.2 IEC 807-8 – Rectangular Connectors For Frequencies Below 3 MHz, Part 8: Detailed Specification For Connectors, Four-Signal Contacts And Earthing Contacts For Cable Screens, First Edition.

.9 FIPS PUB 174 – Commercial Building Telecommunications Wiring Standard. Federal Information Standard Publication.

.10 UL 444 and 13 – Adopted Test and Follow-Up Service Requirements For the Optional Qualification of 100Ω Twisted-Pair (Cables).

.11 NEMA WC 63 – Performance Standard For Field Testing Of Unshielded Twisted-Pair Cabling System.

.12 ANSI/EIA/TIA

.1 ANSI/EIA/TIA-492AAAA – Detailed Specification For 62.5μm Core Diameter / 125μm Cladding Diameter Class 1a Multimode, Graded-Index Optical Waveguide fibres.

.2 ANSI/EIA/TIA-492BAAA – Detailed Specifications For Class Iva Dispersion-Unshifted Singlemode Optical Waveguide Fibres Used In Communication Systems.

.3 ANSI/EIA/TIA-472CAAA – Detailed Specifications For All Dielectric (Construction 1) Fibre optic Communications Cable For Indoor Plenum Use, Containing Class 1a, 62.5μm Core Diameter / 125μm Cladding Diameter Fibre optic(s).

.4 ANSI/EIA/TIA-472DAAA – Detailed Specifications For All Dielectric Fibre optic Communications Cable For Outdoor Plant Use, Containing Class 1, 62.5μm Core Diameter / 250μm Cladding Diameter Fibre optic(s).

.5 ANSI/EIA/TIA-455 – Test Procedures For Fibre optics, Cables And Transistors.

.6 ANSI/TIA/EIA-526-7 - Optical Power Loss Measurements of Installed Singlemode Fiber Cable Plant;

.7 ANSI/TIA-526-14-B - Optical Power Loss Measurements of Installed Multimode Fiber Cable Plant;

.8 ANSI/EIA/TIA-569-C (CSA T530) - Commercial Building Standards for Telecommunications Pathway and Spaces;

.9 ANSI/EIA/TIA-598 – Colour Coding of Fibre Optic Cables.

.10 ANSI/EIA/TIA-604-3 – FOCIS 3 Fibre Optic Connector Intermateability Standard.

.11 ANSI/EIA/TIA-606-B (CSA T528) – Administration Standard for the Telecommunications Infrastructure of Commercial Buildings.

.12 ANSI/EIA/TIA-607-C (CSA T527) – Grounding and Bonding Requirements for Telecommunications in Commercial Buildings;

.13 ANSI Z136.2 – American Standards For The Safe Operation of Fibre optic Communication Systems Utilizing Laser Diode And LED Sources.

.14 TIA-1179-A (September 2017) Healthcare Facility Telecommunications Infrastructure Standard

.15 ANSI/CEA

.1 ANSI/ICEA S-83-640 – Fibre Optic Outside Plant Communications Cable.

.2 ANSI/ICEA S-83-596 – Fibre Optic Premises Distribution Cable.

.16 Work to be in compliance with requirements of this Section and of Owner's standard – The Hospital for Sick Children Specifications for Data/Voice and other Low Voltage Communications standards.

.17 Where discrepancies exist between requirements herein this Section and Owner's Standard obtain direction from Owner but typically Owner's Standards to rule.

.18 Anywhere cabling standards conflict with one another or with electrical or safety codes, Contractor shall defer to the NEC and any applicable local codes or ordinances, or default to the most stringent requirements listed by either.

.19 Knowledge and execution of applicable standards and codes is the sole responsibility of the Contractor.

.20 Any violations of applicable standards or codes committed by the Contractor shall be remedied at the Contractor's expense.

1.5 WORK SEQUENCE

.1 Prior to start of each work period in occupied area, temporary protection shall be installed to prevent damage to any personal property or furnishing. Coordinate with Owner's representative if any furniture must be relocated to facilitate work.

.2 Owner's representative shall approve temporary protection plan prior to use.

.3 Necessary steps shall be taken by contractor to ensure that required firefighting apparatus is accessible at all times. Flammable materials shall be kept in suitable places outside the building.

1.6 INSPECTIONS

.1 The Engineer and/or the Project Manager will carry out inspections and prepare deficiency list for action by the Contractor, during and on completion of project.

1.7 DRAWINGS AND SPECIFICATIONS

.1 The drawings and specifications are complementary each to the other and what is called for by one to be binding as if called for by both. Should any discrepancy appear between the drawings and specifications which leaves the Contractor in doubt as to the true intent and meaning of plans and specifications, a ruling is to be obtained from the Engineer in writing before submitting Tender. If this is not done, the maximum, the most expensive alternate or option will be provided in base tender bid.

.2 All drawings and all Divisions of these specifications shall be considered as a whole and work of this Division shown anywhere therein shall be furnished under this Division.

.3 Drawings are diagrammatic and indicate the general arrangement of equipment and pathways. Most direct routing of cabling is not assured. Exact requirements shall be governed by architectural, structural, and mechanical conditions of the job. Consult all other drawings in preparation of the bid. Extra lengths of wiring or addition of pull and junction boxes, etc. necessitated by such conditions shall be included in the bid. Check all information and report and apparent discrepancies before submitting the bid.

.4 Contractor shall determine the exact locations of equipment and rough-ins, and the exact routing of pathways so as to best fit the layout of the job.

.5 Scaling off the drawings will not be sufficient or accurate for determining these locations. Where job conditions require reasonable changes in indicated arrangement and locations, such changes shall be made by the Contractor at no additional cost to the Owner.

.6 Before ordering any conduit, cable tray, cables, fittings, etc., this Contractor shall verify all pertinent dimensions at the job site and be responsible for their accuracy.

1.8 MATERIAL

.1 This contractor is responsible to ensure that all items submitted meet all requirements of the drawings and specification, and fits in the allocated space. The final determination of a product being acceptable shall be determined by the Engineer.

1.9 TESTING DATA

.1 The contractor shall provide a complete testing report utilizing a testing device as specified in the applicable TIA/EIA standard with the correct adapter and test. All copper tests shall be compliant to the current TIA/EIA standards: Perm Link or Channel.

.2 The Summary report shall provide be provided to the end user in a universal format so that there is no need to purchase any software to read and print the report.

.1 Utilizing Adobe Acrobat is an acceptable manner.

1.10 PAINTING AND FINISHES

.1 Minor damages to finish on factory finished equipment shall be touched up to the Engineer's satisfaction. Items suffering major damage to finish shall be replaced at the direction of the Engineer. Protect work so that finishes will not be damaged or marred during construction. Maintain the necessary protection until completion of the work.

1.11 SAFETY

.1 The Contractor shall be responsible for the safety of his workmen and the equipment on the project in accordance with all applicable safety legislation passed by Federal, Provincial, and local authorities governing construction safety. The more stringent regulations shall prevail.

1.12 WARRANTY

.1 Contractor shall provide a 25-year Panduit Certification PlusSM System Warranty on all copper and fiber links and/or channels.

.2 Panduit® Certification PlusSM warranty shall meet the following criteria.

.1 A 25-year guarantee that the installed cabling system will pass the Commercial Building Telecommunications Standards cited in this document.

.2 This warranty will cover all registered links and/or channels.

.3 Contractor shall indicate in warranty documentation whether registered links are to be link or channel.

.1 If links are covered, this warranty may be invoked only if the links are comprised entirely of Panduit components and cable.

.2 If channels are covered, this warranty may be invoked only if entire channel links are comprised of continuous Panduit components and cable, including patch cords.

.4 The communications Contractor will correct any problems and malfunctions that are warranty-related issues without charge for the entire warranty period.

.5 If the Certification PlusSM warranty is needed by Hospital for Sick Children within the warranted period and the original installer is no longer in business, Panduit shall find a substitute Panduit ONESM certified contractor and assume costs to fulfill the obligations of the warranty.

.6 Upon acceptance of the warranty paperwork and test results from the Contractor, Panduit will mail a notification letter to the installer and a notification letter with warranty certificate to Hospital for Sick Children.

.3 The warranty period shall commence following the final acceptance of the project by Hospital for Sick Children and written confirmation of warranty from Panduit.

.4 System manufacturers to provide a minimum twenty (20) year full parts, labour, and performance warranty on all passive components including structural cabling system. These warranties to be provided in written certificate form and that guarantee following:

.1 passive system components, e.g. patch panels, UTP cable and outlet jacks, are free from manufacturing defects in material or workmanship;

.2 approved cabling systems exceed specifications of TIA-EIA 568B.2.1 standards for specified category, in particular for attenuation and near-end cross-talk, loss and bandwidth requirements;

.3 installation supports applications for which it was originally designed as well as future versions of system performance specifications and any future applications using TIA/EIA 586B.2.1 component and cabling standards;

.4 replacement or repair of any originally installed registered system component to be completed at no cost for parts and labour to Owner during warranty period. Any components repaired or replaced to be warranted for remainder of warranty.

.5 System manufacturers to provide in writing to Consultant for Owner, that in event of demise or failure or change in approved status of installing certified system installer/vendor, manufacturer to be responsible for providing another certified system installer/vendor to fulfil remainder of warranty conditions.

.6 Claim for repair procedure to comprise of contractor being notified of a problem and who will conduct necessary tests and repairs to correct problem. Should contractor be unable to resolve problem, contractor to contact system supplier who will take necessary action and provide any technical support to correct problem.

.7 Initial response time to a repair claim for a registered system to be within 4 hours from time Contractor was notified of system fault.

.8 Ensure that selected network cabling component manufacturer includes a system warranty that is a true "end-to-end" structured cabling system warranty from a single manufacturer, which includes data/voice communications outlet and patch cord at workstation, horizontal copper cabling, and patch panel and patch cords at LAN room. In addition, this warranty is to be valid with selected fibre optic cabling solution.

PART 2 - PRODUCTS

2.1 MATERIAL APPROVAL

.1 The design, manufacture and testing of electrical equipment and materials shall conform to or exceed the latest applicable CSA, IEEE, and ANSI standards.

.2 All materials must be new and be ULC or CSA listed. Any materials not covered by the aforementioned listing standards shall be tested and approved by an independent testing laboratory, Technical inspection Services, or other government agency.

2.2 SHOP DRAWINGS

.1 Submit shop drawings for equipment and accessories specified in this Section. Shop drawings shall include connection wiring schematic drawings for each system, system design drawings including dimensions and layouts, system riser drawings and copies of manufacturer's component literature sheets.

.2 Include data sheets for cabling, faceplates, terminal cabinets, racks, etc., and proposed cabling testing sheets.

.3 Submit following:

.1 proof that final installation drawings have been reviewed by a Registered Communications Distribution Designer (RCDD);

.2 samples of each type of data/voice jack complete with faceplate;

.3 samples of patch cord;

.4 sample of fibre optic cabling with proposed terminations, and horizontal copper cabling;

.5 sample of proposed labelling of components and wiring;

.6 sample of proposed test sheet;

.7 copy of tester calibration certificate;

.8 written confirmation that telecommunication system vendor is manufacturer’s valid certified system vendor for at least duration of contract work and is in good standing at time of Bid submission;

.9 written evidence (copies of certificates) of vendor and technician qualifications;

.10 copy of system manufacturer’s warranty.

2.3 Refer to additional requirements in Section 26 05 00.

2.4 AS-BUILT DRAWINGS

.1 To suit Division 01 requirements.

.2 Red lines, mark-ups by this contractor.

2.5 OPERATION AND MAINTENANCE MANUALS

.1 Refer to Division 01.

PART 3 - EXECUTION

3.1 WORKMANSHIP AND CONTRACTOR’S QUALIFICATIONS

.1 Only first class workmanship will be accepted, not only in regards to durability, efficiency and safety, but also in regards to neatness of detail. Present a neat and clean appearance on completion to the satisfaction of the Engineer. Any unsatisfactory workmanship will be replaced at no extra cost.

.2 Conform to the best practices applicable to this type of work. Install all equipment and systems in accordance with the manufacturer's recommendations, but consistent with the General Requirements of this Specification. This Contractor will be held responsible for all damage to the work of his own or any other trade, resulting from the execution of his work. Store all equipment and materials in dry locations.

.3 Provide foreman in charge of this work at all times.

.4 The contractor shall be fully liable to provide and maintain in force during the life of this Contract, such insurance, including Public Liability Insurance, Product Liability Insurance, Auto Liability Insurance, Worker's Compensation, and Employer's Liability Insurance.

.5 Vendor responsible for provision of system to have following qualifications:
- .1 being current approved Belden Certified Installer in good standing
- .2 being established communications and electronics contractor that has and currently maintains a locally run and operated business for at least five years and holds applicable provincial and local licenses;
- .3 be authorized Distributor or established franchisee for manufacturer of product/system proposed with full manufacturer's warranty privileges and be capable of providing post warranty service;
- .4 employ technicians who have attended and successfully completed manufacturer's technical certification classes for proposed system;
- .5 show satisfactory evidence, upon request, that they maintain a fully equipped service organization capable of furnishing adequate inspection and service to system on a 24-hour/7-day basis;
- .6 maintain at their facility necessary spare parts in proper proportion as recommended by manufacturer to maintain and service equipment being supplied.

.6 Submit written evidence of qualifications with shop drawings submission.

.7 Vendors not meeting any of above qualifications may be disqualified at Owner's discretion and be replaced with qualified vendor acceptable to Owner.

3.2 INSTALLATION - GENERAL

.1 Prior to start of work, notify Owner's Network Integrator/Project Manager and submit in writing the following information:

- .1 name of installation contractor;
- .2 name of supervisor on site;
- .3 description of scope of work;
- .4 duration of work;
- .5 location of telecommunication closet / room number;
- .6 name of project and location.

.2 Obtain permission of Owner's Network Integrator / Project Manager before commencing any work or accessing any telecom closet.

.3 Properly handle and install structured network cabling in accordance with manufacturer's specifications. Avoid undue pulling tension, abrasion, or rough handling to ensure that cables will permit transmission up to required category rating design speed for cables. Install cables without splices or cuts to ensure elimination of reflections, discontinuities, impedance mismatches, etc. maximum horizontal length of copper cabling from workstation to network switch is not to exceed 90 m (295') or less if recommended by system manufacturer to meet required category grade rating performance standards. Maximum length of patch cables (either cross connects or interconnecting with electronic equipment to connect devices at work area outlet), to be a total of 10 m (30'). Maintain system manufacturer's minimum channel lengths as confirmed with system manufacturer. Provide cable loops in accordance with manufacturer's instructions.

.4 Run horizontal, UTP cables continuous from end to end with no splices. Install horizontal cables in Star topology, emanating from rack mounted patch panel(s) and terminating on data outlet faceplates in rooms or other workstation locations.

.5 Terminations to involve as little outer jacket removal as possible and cable pairs "untwisting" is to not exceed 6 mm (¼").

.6 Unless otherwise noted or where cable tray is shown for such use, run cabling in conduit. Install pull cords for future use, in conduits extending between floors.

.7 Provide slack cable to allow for minor workstation relocations. Provide a coil of slack cable of an approximate 2 m (6') length for each workstation outlet run.

.8 Generally, no more than two (2) 90-degree changes in direction are recommended for cable installed in conduit without pull boxes and not more than 40% fill ratio. Confirm exact conduit bending radii restrictions and fill ratios with system manufacturer and comply with those standards.

.9 With consideration in minimizing alien crosstalk to levels as per BICSI standards and manufacturer's standards, dress cables in a neat and orderly fashion from entrance of communications closet to relay racks using vertical and horizontal cable management trays and paths. Do not exceed manufacturer's distance limitations to maintain required category rating performance standards.

.10 Care to be taken to ensure that during installation, nicks, abrasions, burning and scuffing of cable is prevented. Replace cables found to be damaged regardless of whether cable passes category grade rating or fibre performance testing standards.

.11 Secure bundled cables transitioning between floors via ladder cable tray, to vertical ladder sections with Velcro wraps. Use waterfall (rounded transition) fittings for cable changing from a horizontal path to a vertical one. This is to maintain minimum bend radius for cabling system. Support cables running through risers between floors such that they are properly supported for their weight, especially in situations with high pair count cables and large bundles.

.12 Electrical Contractor and telecommunication system vendor to provide coordination of structured cabling system with other systems as required. Review data drop interconnections with various trades and provide data drop to equipment as required.

.13 Required necessary drilling and anchoring components to be installed before any horizontal cable is installed.

.14 Route horizontal cable into equipment racks/enclosures and neatly bundle with Velcro cable ties. Maximum number of cables per bundle to be 25.

.15 Securely mount fire retardant plywood on wall in each telecommunications room or closet.

.16 Review installation of conduits and boxes and advise Electrical Contractor where products do not comply with specified category rating standards. Ensure that products are replaced as required to meet standards.

.17 Where conduits and/or cable tray is not being provided, conductors within accessible ceiling spaces to be properly bundled using "Velcro" type wraps and supported with "J" hooks. Secure "J" hooks to ceiling slab structure. Install conductors following building lines. Do not fastened conductors to suspended ceiling support systems. Obtain Consultant's approval in use of "J" hooks. Unless otherwise noted, drops down from ceiling spaces to consist of cabling installed in vertical conduits running down within walls to outlet boxes and terminating onto jacks.

.18 For horizontal copper backbone cabling, multi- pair conductor cabling is preferred. If available only in limited number of pair cabling, provide multiple runs to provide quantity as identified on drawings, and increase conduit diameters to suit exact number requirements, in accordance with of standards and codes.

.19 Cables wraps are to be Velcro type and are not to be over tightened.

.20 Provide grounding and bonding requirements as specified.

3.3 COORDINATION

.1 Coordinate work with other trades.

.2 Verify equipment dimensions and requirements with provision specified under this Section. Check actual job conditions before fabricating work. Report all necessary changes in time to prevent needless work. Changes or additions subject to additional compensation, which are made without written authorization and an agreed price, shall be at Contractor's risk and expense.

.3 Read specifications and drawings of other trades and conform with their requirements before proceeding with any work specified in this Division related to other trades. Cooperate with all other trades on the job, so that all equipment can be satisfactorily installed, and so that no delay is caused to any other Trades.

3.4 MANUFACTURERS' INSTRUCTIONS

.1 Where the specifications call for an installation to be made in accordance with Manufacturer's recommendations, a copy of such recommendations shall be at all times be kept on the job site and be available to the Owner's Representative.

.2 Follow manufacturer's instructions where they cover points now specifically indicated on the drawings and specifications. If they are in conflict with the drawings and specifications obtain clarification from the Consultant before starting work.

3.5 QUALITY ASSURANCE

.1 See General Provisions of the Contract.

.2 The specifications contained herein are set forth as the minimum acceptable requirements. This does not relieve the Contractor from executing other quality assurance measures to obtain a complete operating system within the scope of this project.

.3 The Contractor shall ensure that all workmanship, all materials employed, all required equipment and the manner and method of installation conforms to accepted construction and engineering practices, and that each piece of equipment is in satisfactory working condition to satisfactorily perform its functional operation.

.4 Provide quality assurance tests and operational check on all components of the electrical distribution system, all lighting fixtures, and communication systems.

3.6 LABELS AND SIGNS

.1 Labelling shall be as per ANSI/EIA/TIA-606-B (CSA T528) – Administration Standard for the Telecommunications Infrastructure of Commercial Buildings.

3.7 ADJUST AND CLEAN-UP

.1 The Contractor and associated sub trades, at all times during construction, to keep the site free of all debris, boxes, packing, etc., resulting from work of this Trade. At the completion of this work, the installation is to be left in a clean and finished condition to the satisfaction of the Engineer.

3.8 TESTS AND ACCEPTANCE

.1 The operation of the equipment does not constitute an acceptance of the work by the Owner. The final acceptance is to be made after the Contractor has adjusted his equipment and demonstrated that it fulfils the requirements of the drawings and the specifications.

.2 Testing of all systems shall be performed in the presence of the Owner's designated representative. The contractor shall give 72 hours advance notice to the Owner before beginning the tests.

.3 Upon completion of the installation, the Contractor shall furnish certificates of approval from all authorities having jurisdiction, as applicable. Contractor shall demonstrate that work is complete and in perfect operating condition. In the presence of the Owner, the Contractor shall demonstration the proper operation of all miscellaneous systems.

END OF SECTION

PART 1 - GENERAL

1.1 SUMMARY

.1 Provide a complete system of empty conduit, pull boxes, outlets, and sleeves for enclosure of wiring by communications cabling.

1.2 RELATED REQUIREMENTS

.1 Section 26 05 33.13 – Conduit for Electrical Systems.

.2 Section 26 05 33.16 – Boxes for Electrical Systems.

1.3 REFERENCES

.1 Latest BISCI Telecommunications Distribution Methods Manual.

PART 2 - PRODUCTS

2.1 OUTLETS

.1 Wall outlets shall be 115 mm square boxes with plaster rings to suit single gang devices unless otherwise noted.

.2 Provide 53 mm conduit through walls as noted.

2.2 CONDUITS

.1 Conduit size shall be in accordance with recommended standard for conduits in Building as published by BICSI.

.2 Minimum conduit size shall be 21 mm diameter.

.3 Minimum space requirements in pull boxes for 90 degree pulls, shall be as follows:

Maximum conduit size	Size of pull boxes in millimetres			For each additional conduit size increase width by:
	Width	Length	Depth	
21 mm	150 mm	300 mm	100 mm	50 mm
27 mm	200 mm	400 mm	150 mm	75 mm
35 mm	250 mm	450 mm	200 mm	75 mm
41 mm	300 mm	600 mm	250 mm	100 mm
53 mm	350 mm	750 mm	300 mm	125 mm

.4 Plenum cables are permitted in accessible ceilings. Provide ‘J’ hooks in these locations for later cable installation by others.

PART 3 - EXECUTION

3.1 INSTALLATION

.1 Vertically mount outlet boxes, unless noted otherwise, 300 mm to centre above floor, or 150 mm above counter top where shown at counters or benches.

.2 Fish conduit, clear blockages and outlet and clean out pull boxes at completion of installation. Leave conduit free of water or excess moisture. Install No. 12 gauge galvanized soft iron pull wire, or 1/8 inch nylon pull cord continuously from outlet to outlet, through conduit and fasten at each box.

.3 Conduit shall have a bending radius of not less than nine times conduit diameter. Ream out conduit and identify ends with green paint.

.4 Install additional steel pull boxes in such a manner that, throughout entire system, there shall be not more than two 90 degree or equivalent bends or more than 30 000 mm in each run, so that wire or cables may be pulled in or withdrawn with reasonable ease. Minimum space requirements in pull boxes having one conduit each in opposite ends of the box, shall be as follows:

Maximum conduit size	Size of pull boxes in millimetres			For each additional conduit size increase width by:-
	Width	Length	Depth	
21 mm	150 mm	300 mm	100 mm	50 mm
27 mm	200 mm	400 mm	150 mm	75 mm
35 mm	250 mm	450 mm	200 mm	75 mm
41 mm	300 mm	600 mm	250 mm	100 mm
53 mm	350 mm	750 mm	300 mm	125 mm

.5 Show as-installed conduit routing and location of all pull boxes on the record drawings at project completion.

END OF SECTION

PART 1 - GENERAL

1.1 SUMMARY

.1 The work covered under this section consists of the furnishing of all necessary labor, supervision, materials, equipment, and services to completely execute the system of non-continuous cable supports (“J-Hooks”) as described in this specification.

1.2 SCOPE

.1 Non-continuous cable supports.

.2 Adjustable non-continuous cable support sling.

.3 Multi-tiered non-continuous cable support assemblies.

.4 Non-continuous cable support assemblies from drop wire/ceiling.

.5 Non-continuous cable support assemblies from beam, flange.

.6 Non-continuous cable support assemblies from C & Z Purlin.

.7 Non-continuous cable support assemblies from wall, concrete, or joist.

.8 Non-continuous cable support assemblies from threaded rod.

.9 Raised floor non-continuous cable support assemblies.

.10 Cantilever-Mounted Option for non-continuous cable supports.

.11 Installation accessories for non-continuous cable supports.

1.3 DEFINITIONS

.1 UTP: Unshielded twisted pair.

.2 ANSI: American National Standards Institute

.3 ASTM: American Society for Testing and Materials

.4 EIA: Electronic Industries Alliance

.5 TIA: Telecommunications Industry Association

.6 cULus: Listed by Underwriters Laboratories based on both Canadian and US (United States) standards requirements.

1.4 SUBMITTALS

.1 Submit product data on non-continuous cable support devices, including attachment methods. Product data to include, but not limited to materials, finishes, approvals, load ratings, and dimensional information.

1.5 QUALITY ASSURANCE

.1 Non-continuous cable supports and cable support assemblies shall be listed by Underwriters Laboratories for both Canadian and US standards (cULus).

.2 Non-continuous cable supports shall have the manufacturers name and part number stamped on the part for identification.

.3 Manufacturer: Company specializing in manufacturing products specified in this section with a minimum of five years documented experience in the industry, and certified ISO 9000.

PART 2 - PRODUCTS

2.1 ACCEPTABLE MANUFACTURERS

.1 PANDUIT.

.2 ERICO, Inc.

.3 Approved equal.

2.2 REFERENCES

.1 ASTM B633 Standard Specification for Electro-deposited Coatings of Zinc on Iron and Steel

.2 ASTM B 695-90 Standard Specification for coatings of Zinc Mechanically Deposited on Iron and Steel

.3 ASTM A123 Standard Specification for Zinc (Hot-Dip Galvanized) Coatings on Iron and Steel Products

.4 ASTM A924/A924M Standard Specification for General Requirements for Steel Sheet, Metallic-Coated by the Hot-Dip Process

.5 ASTM A109 Standard Specification for Steel, Strip, Carbon, Cold-Rolled

.6 ASTM A167 Standard Specification for Stainless and heat-Resisting Chromium-Nickel Steel Plate, Sheet, and Strip

.7 ASTM A480/A480M Standard Specification for General Requirements for Flat-Rolled Stainless and Heat-Resisting Steel Plate, Sheet, and Strip.

.8 ASTM A568 Standard Specification for Steel, Sheet, Carbon, and High-Strength, Low-Alloy Hot-Rolled and Cold-Rolled

.9 A653 G60-Specification for Steel Sheet, Zinc-Coated (Galvanized) or Zinc-Iron Alloy-coated (Galvannealed) by the Hot-Dip process

.10 ASTM A666 Standard Specification for Annealed or Cold-Worked Austenitic Stainless Steel Sheet, Strip, Plate, and Flat Bar

.11 ASTM A682 Standard Specification for Steel, Strip, High-Carbon, Cold-Rolled, Spring Quality

.12 ASTM A879 Standard Specification for Steel Sheet, Zinc Coated by the Electrolytic Process for Applications Requiring Designation of the Coating Mass on Each Surface

.13 ASTM B117 Standard Method of Salt Spray (Fog) Testing

.14 ASTM D610 Standard test Method for Evaluating Degree of Rusting on Painted Steel Surfaces UL 2043 - Standard for Fire Test for Heat and Visible Smoke Release for Discrete Products and Their Accessories Installed in Air-Handling Spaces.

.15 ANSI/ TIA/ EIA 568 Commercial Building Telecommunications Cabling Standard, current revision level.

.16 ANSI/ TIA/ EIA 569 Commercial Building Standard for Telecommunications Pathways and Spaces, current revision level.

.17 NFPA 70 National Electrical Code®

2.3 NON-CONTINUOUS CABLE SUPPORT SYSTEMS

.1 Non-continuous cable supports

.1 Non-continuous cable supports shall provide a bearing surface of sufficient width to comply with required bend radii of high-performance cables; cULus Listed.

.2 Non-continuous cable supports shall have flared edges to prevent damage while installing cables.

.3 Non-continuous cable supports sized 1 5/16” and larger shall have a cable retainer strap to provide containment of cables within the hanger. The cable retainer strap shall be removable and reusable and be suitable for use in air handling spaces.

.4 Non-continuous cable supports shall have an electro-galvanized or G60 finish and shall be rated for indoor use in non-corrosive environments.

.5 Stainless Steel non-continuous cable supports are intended for indoor and outdoor use in non-corrosive environments or where only mildly corrosive conditions apply.

.6 Non-continuous cable supports shall be ERICO CableCatTM J-hook series CAT12, CAT21, CAT32, CAT64, CAT21SS, CAT32SS, CAT64SS; CAT-CMTM Double J-Hook CAT100CM; CAT-CMTM U-hook series CAT200CMLN, CAT300CMLN; and CAT-CMTM retainer CATRT200CM, CATRT300CM or approved equal.

.2 Adjustable non-continuous cable support sling

.1 Constructed from steel and woven laminate; sling length can be adjusted to hold up to 425 4-pair UTP; rated for indoor use in non-corrosive environments. Rated to support Category 5 and higher cable, or optical fiber cable; cULus Listed.

.2 Adjustable non-continuous cable support sling shall have a static load limit of 100 lbs.

.3 Adjustable non-continuous cable support sling shall be suitable for use in air handling spaces.

.4 If required, assemble to manufacturer recommended specialty fasteners including beam clips, flange clips, C and Z purlin clips.

.5 Acceptable products: ERICO CADDY CableCatTM CAT425; or approved equal.

.3 Multi-tiered non-continuous cable support assemblies

.1 Multi-tiered non-continuous cable support assemblies shall be used where separate cabling compartments are required. Assemblies may be factory assembled or assembled from pre-packaged kits. Assemblies shall consist of a steel angled hanger bracket holding up to six non-continuous cable supports, rated for indoor use in non-corrosive environments; cULus Listed.

.2 If required, the multi-tier support bracket may be assembled to manufacturer recommended specialty fasteners including beam clamps, flange clips, C and Z purlin clips.

.3 The multi-tiered support bracket shall consist of ERICO CADDY CATHBA and CableCatTM J-Hooks with screws; or approved equal.

.4 Non-continuous cable support assemblies from beam, flange

.1 Fastener to beam or flange with one non-continuous cable support, factory or jobsite assembled; rated for indoor use in non-corrosive environments; cULus Listed.

.2 Acceptable products: ERICO CableCatTM J-hook series CAT12, CAT21, CAT32, CAT64 with CADDY beam clamps and CADDY flange clips; or approved equal.

.5 Non-continuous cable support assemblies from C & Z Purlin

.1 Fastener to C or Z purlin with one non-continuous cable support, factory or jobsite assembled; rated for indoor use in non-corrosive environments, cULus Listed.

.2 Acceptable products: ERICO CableCatTM J-hook series CAT12, CAT21, CAT32, CAT64 with CADDY Purlin hangers; or approved equal.

.6 Non-continuous cable support assemblies from wall, concrete, or joist

.1 Fastener to wall, concrete, or joist with one non-continuous cable support, factory or jobsite assembled; rated for indoor use in non-corrosive environments, cULus Listed.

.2 Acceptable products: ERICO CableCatTM J-hook series CAT12, CAT21, CAT32, CAT64, with CADDY angle bracket; or approved equal.

.7 Non-continuous cable support assemblies from threaded rod

.1 Fastener to threaded rod with one non-continuous cable support, factory or jobsite assembled, rated for indoor use in non-corrosive environments, cULus Listed.

.2 The multi-tiered support bracket shall have a static load limit of 300 lbs.

.3 U-hooks and Double J-hook shall attach directly to threaded rod using standard nuts.

.4 Acceptable products: ERICO CableCatTM J-hook, CAT12, CAT21, CAT32, CAT64 with CADDY CATHBA series; CAT-CMTM Double J-hook CAT100CM, CAT-CMTM Direct mount U-hook CAT200CMLN, CAT300CMLN; or AFAB series; or approved equal.

.8 Raised floor non-continuous cable support assemblies

.1 Fastener to raised (access) floor pedestal with one non-continuous cable support, factory or jobsite assembled, rated for indoor use in non-corrosive environments; cULus Listed.

.2 Acceptable products: ERICO CADDY CAT12CD1B, CAT21CD1B or CAT32CD1B; CAT64CD1B; or approved equal.

.9 Cantilever-Mounted cable supports

.1 U-hook shall be able to be assembled to a wide variety of wall mount brackets.

.2 Spacing of individual U-hooks as needed, max of 4’ to 5’ apart.

.3 U-hooks may have the optional attachment of a cable roller for ease in pulling cables.

.4 Acceptable products: ERICO CAT-CMTM U-hooks CAT200CMLN, CAT300CMLN: CAT-CM roller assemblies CATRL200CM, CATRL300CM; CATWMCM bracket; or approved equal.

.10 Installation accessories for non-continuous cable supports

.1 Cable Pulley

.1 Non-continuous cable supports may be used as an installation tool when a removable pulley assembly is included. The pulley shall be made of plastic and be without sharp edges. The pin and bail assembly must be able to be secured to the J-Hook during cable installation. The pulley must remain secured while cables are being pulled.

.2 The pin and roller assembly must be removed after cables are installed.

.3 Acceptable products: ERICO CADDY CAT32PLR, CAT64PLR, or approved equal.

.2 Cable Protector

.1 The protective steel tube shall fit over threaded rod and be at least 4” in length.

.2 The tube shall prevent damage to cables placed in or pulled through CAT-CMTM U-hooks. The tube shall not inhibit the pulling of cables.

.3 Acceptable products: ERICO CAT-CMTM CATTBCM, or approved equal.

2.4 FINISHES

.1 ASTM B633 Standard Specification for Electro-deposited Coatings of Zinc on Iron and Steel

.2 ASTM B 695 Standard Specification for coatings of Zinc Mechanically Deposited on Iron and Steel

.3 ASTM A123 Standard Specification for Zinc (Hot-Dip Galvanized) Coatings on Iron and Steel Products

.4 ASTM A924/A924M Standard Specification for General Requirements for Steel Sheet, Metallic-Coated by the Hot-Dip Process

.5 Non-continuous cable supports used where only mildly corrosive conditions apply shall be stainless steel, AISI type 304.

PART 3 - EXECUTION

3.1 INSTALLATION

.1 Installation and configuration shall conform to the requirements of the current revision levels of ANSI/ EIA/TIA Standards 568 & 569, NFPA 70 (National Electrical Code), applicable local codes, and to the manufacturer's installation instructions.

.2 Install cables using techniques, practices, and methods that are consistent with Category 5 or higher requirements and that supports Category 5 or higher performance of completed and linked signal paths, end to end.

.3 Install cables without damaging conductors, shield, or jacket.

.4 Do not bend cables, in handling or in installing, to smaller radii than minimums recommended by manufacturer.

.5 Pull cables without exceeding cable manufacturer's recommended pulling tensions. Use pulling means that will not damage media.

.6 Do not exceed load ratings specified by manufacturer.

.7 Adjustable non-continuous support sling shall have a static load limit of 100 lbs.

.8 Follow manufacturer's recommendations for allowable fill capacity for each size non-continuous cable support.

END OF SECTION

PART 1 - GENERAL

1.1 SECTION INCLUDES

.1 Firestopping through penetrations in fire rated assemblies.

1.2 RELATED REQUIREMENTS

.1 Division 26 – Electrical.

.2 Section 27 05 28 - Pathways for Communications Systems.

.3 Section 27 05 29 - Hangers and Supports for Communications Systems.

.4 Section 27 05 44 - Sleeves and Sleeve Seals for Communications Pathways and Cabling.

.5 Section 27 05 53 - Identification for Communications Systems.

.6 Section 27 13 23 - Communications Optical Fiber Backbone Cabling.

.7 Section 27 15 13 - Communications Copper Horizontal Cabling.

1.3 REFERENCES

.1 ASTM E 84, “Surface Burning Characteristics of Building Materials”.

.2 ASTM E 119, “Fire Tests of Building Construction and Materials”.

.3 ASTM E 814, “Fire Tests of Penetration Firestop Systems”.

.4 ANSI/UL263, “Fire Tests of Building Construction and Materials”.

.5 ANSI/UL723, “Surface Burning Characteristics of Building Materials”.

.6 ANSI/UL1479, “Fire Tests of Through Penetration Firestops”.

.7 Underwriters Laboratories Inc. (UL) – Fire Resistance Directory

1.4 PERFORMANCE REQUIREMENTS

.1 Fire rated pathway devices shall be the preferred product and shall be installed in all locations where frequent cable moves, add-ons and changes will occur, such devices shall:

.1 Meet the hourly rating of the floor or wall penetrated.

.2 Permit the allowable cable load to range from 0% to 100% visual fill thereby eliminating the need to calculate allowable fill ratios.

.3 Not require any additional action on the part of the installer to open or close the pathway device or activate the internal smoke and fire seal, such as, but not limited to:

.1 Opening or closing of doors.

.2 Twisting an inner liner.

.3 Removal or replacement of any material such as, but not limited to, sealant, caulk, putty, pillows, bags, foam plugs, foam blocks, or any other material.

.4 Permit multiple devices to be ganged together to increase overall cable capacity.

.5 Allow for retrofit to install around existing cables.

.6 Include an optional means to lengthen the device to facilitate installation in thicker barriers without degrading fire or smoke sealing properties or inhibiting ability of device to permit cable moves, add-ons, or changes.

.2 Where single cables (up to 0.27 in. (7 mm) diameter) penetrate gypsum board/stud wall assemblies, a fire-rated cable grommet may be substituted. Acceptable products shall be molded from plenum-grade polymer and conform to the outer diameter of the cable forming a tight seal for fire and smoke. Additionally, acceptable products shall lock into the barrier to secure cable penetration.

.3 Where non- mechanical products are utilized, provide products that upon curing do no re-emulsify, dissolve, leach, breakdown or otherwise deteriorate over time from exposure to atmospheric moisture, sweating pipes, ponding water or other forms of moisture characteristic during or after construction.

.4 Where it is not practical to use a mechanical device, openings within floors and walls designed to accommodate telecommunications and data cabling shall be provided with re-enterable products that do not cure or dry.

.5 Cable trays shall terminate at each barrier and resume on the opposite side such that cables pass independently through fire-rated pathway devices. Cable tray shall be rigidly supported independent from fire-rated pathway devices on each side of barrier.

1.5 SUBMITTALS

.1 In accordance with Section 27 05 00 - Common Work Results for Communications

1.6 QUALITY ASSURANCE

.1 In accordance with Section 27 05 00 - Common Work Results for Communications

1.7 DELIVERY, STORAGE, AND HANDLING

.1 In accordance with Section 27 05 00 - Common Work Results for Communications

1.8 PROJECT CONDITIONS

.1 Do not install firestopping products when ambient or substrate temperatures are outside limitations recommended by manufacturer.

.2 Do not install firestopping products when substrates are wet due to rain, frost, condensation, or other causes.

.3 Maintain minimum temperature before, during, and for a minimum 3 days after installation of materials.

.4 Do not use materials that contain flammable solvents.

.5 Coordinate construction of openings and penetrating items to ensure that through-penetration firestop systems are installed according to specified requirements.

.6 Coordinate sizing of sleeves, openings, core-drilled holes, or cut openings to accommodate through-penetration firestop systems.

.7 Schedule installation of firestopping after completion of penetrating item installation but prior to covering or concealing of openings.

PART 2 - PRODUCTS

2.1 MANUFACTURERS

.1 Specified Technologies Inc., 200 Evans Way, Somerville, NJ 08876. Tel: (800) 992-1180, Fax: (908) 526-9623, Email: specseal@stifirestop.com, Website: www.stifirestop.com.

.2 Substitutions: as approved by the Engineer prior to tender closing.

.3 Single Source: Obtain firestop systems for each type of penetration and construction condition indicated only from a single manufacturer.

2.2 MATERIALS

.1 General: Use only firestopping products that have been tested for specific fire resistance rated construction conditions conforming to construction assembly type, penetrating item type, annular space requirements, and fire rating involved for each separate instance.

2.3 FIRE RATED CABLE PATHWAYS

.1 Steel raceway with intumescent foam pads allowing 0 to 100 percent cable fill, the following products are acceptable:

.1 Specified Technologies Inc. (STI) EZ-PATH Fire Rated Pathway.

PART 3 - EXECUTION

3.1 EXAMINATION

.1 Before beginning installation, verify that substrate conditions previously installed under other sections are acceptable for installation of firestopping in accordance with manufacturer's installation instructions and technical information.

.2 Surfaces shall be free of dirt, grease, oil, scale, laitance, rust, release agents, water repellants, and any other substances that may inhibit optimum adhesion.

.3 Provide masking and temporary covering to protect adjacent surfaces.

.4 Do not proceed until unsatisfactory conditions have been corrected.

3.2 INSTALLATION

.1 General: Install through-penetration firestop systems in accordance with Performance Criteria and in accordance with the conditions of testing and classification as specified in the published design.

.2 Manufacturer's Instructions: Comply with manufacturer's instructions for installation of firestopping products.

3.3 FIELD QUALITY CONTROL

.1 Inspections: Owner will attain qualified independent inspection agency to inspect through-penetration firestop systems installed by the contractor.

.2 Keep areas of work accessible until inspection by authorities having jurisdiction.

.3 Where deficiencies are found, repair firestopping products so they comply with requirements.

3.4 ADJUSTING AND CLEANING

.1 Remove equipment, materials, and debris, leaving area in undamaged, clean condition.

.2 Clean all surfaces adjacent to sealed openings to be free of excess firestopping materials and soiling as work progresses.

END OF SECTION

PART 1 - GENERAL

1.1 SECTION INCLUDES

.1 Labelling and identification requirements for communications systems.

1.2 REFERENCES

.1 ANSI/TIA/EIA-606-A – Administration Standard for Commercial Telecommunications Infrastructure.

.2 UL 969 – Marking and Labeling Systems.

PART 2 - PRODUCTS

2.1 ACCEPTABLE MANUFACTURERS

.1 The Contractor will provide and install identification labeling for the project's communications systems, including all components from the TR to the work outlet and between telecommunications spaces.

.2 Approved Manufacturer: Panduit

.3 This is a performance-based specification developed from the experience of the Hospital for Sick Kids Network and Support services in providing exceptional solutions for all our facilities and departments. As such, substitution of specified products or systems is not allowed.

2.2 SUMMARY

.1 Adhesive cable labels to meet the legibility, defacement, and adhesion requirements specified in UL 969 (Ref. D-16). In addition, the labels shall meet the general exposure requirements in UL 969 for indoor use.

.2 Self-laminating vinyl construction cable labels with a white printing area and a clear tail that self laminates the printed area when wrapped around a cable. The clear area should be of sufficient length to wrap around the cable at least one and one-half times.

.3 ANSI/EIA/TIA-606 for colour codes shall be followed. Labels are to be mechanically printed using a laser printer. Handwritten labels will not acceptable.

2.3 LABEL PRINTER

.1 Thermal Transfer Printer shall print high quality, industrial labels on a wide variety of materials for electrical and network applications such as wire/cable, components, safety and facility identification.

.2 Laminated Adhesive Label Cassettes:

- .1 For flat label applications.
- .2 Polyester material.

.3 Non-Laminated Adhesive Label Cassettes:

- .1 For marking wire and cable and flat label applications.
- .2 Polyester material

.4 Example Products:

- .1 Panduit LS7 series hand-held printer.
- .2 Panduit LS8 series hand-held printer.

2.4 NAMEPLATES

.1 Engraved three-layer laminated plastic, letters on contrasting background:

.2 Rack and Cabinet ID labels: 25 mm (1”) high White Text on Black Background

PART 3 - EXECUTION

3.1 INSTALLATION

.1 Cable identification labels should appear at the following locations with the numbers indicated on the cable schedule and drawings:

.1 300 mm (12 inches) from each end of the cable – after termination.

.2 Front of patch panels.

.3 Front of IDC termination blocks.

.4 Front of workstation/communications outlet faceplates.

.5 Each end of each Telecommunications Conduit.

.2 Fibre Optic safety labels shall appear at the following locations:

.1 Along the length of the conduit or innerduct at 3 m (10 foot) intervals.

.2 At all junction boxes

.3 At all pull boxes.

.4 On all fibre optic patch panels.

.3 Provide 25 per cent additional labels to be left in each telecommunications room on site for future growth.

.4 Provide two Rack/Cabinet nameplates. Mount one on the front, and one on the rear of the rack.

3.2 IDENTIFICATION CONVENTIONS

.1 All cabling will be labelled with the closet letter, followed by a dash and the wire number (i.e. A-001 would be the first wire in closet A).

.2 Labelling for backbone wiring will be preceded with BB followed by the wire number (i.e. BB-001 would be the first backbone.

.3 Obtain Owner’s approval of identification formats, prior to start of work. Submit proposed identification system and nomenclature with shop drawing submission.

.4 All cable and workstation identification shall be recorded in excel "CABLE IDENTIFICATION LOG" which is to be provided to the Owner after cable testing and certification is complete. A duplicate copy shall also be forwarded to the Consultant.

END OF SECTION

PART 1 - GENERAL

1.1 REFERENCES

.1 Refer to Section 27 05 00 for references.

1.2 SUBMITTALS FOR REVIEW

.1 Submit shop drawings for equipment and accessories specified in this Section. Shop drawings shall include connection wiring schematic drawings for each system, system design drawings including dimensions and layouts, system riser drawings and copies of manufacturer's component literature sheets.

.2 Include data sheets for cabling, faceplates, terminal cabinets, racks, etc., and proposed cabling testing sheets.

.3 Submit following:

.1 proof that final installation drawings have been reviewed by a Registered Communications Distribution Designer (RCDD);

.2 samples of each type of data/voice jack complete with faceplate;

.3 samples of patch cord;

.4 sample of fibre optic cabling with proposed terminations, and horizontal copper cabling;

.5 sample of proposed labelling of components and wiring;

.6 sample of proposed test sheet;

.7 copy of tester calibration certificate;

.8 written confirmation that telecommunication system vendor is manufacturer’s valid certified system vendor for at least duration of contract work and is in good standing at time of Bid submission;

.9 written evidence (copies of certificates) of vendor and technician qualifications;

.10 copy of system manufacturer’s warranty.

1.3 Refer to additional requirements in Section 26 05 00.

PART 2 - PRODUCTS

2.1 ACCEPTABLE MANUFACTURERS

.1 Panduit CAT 6A series.

2.2 NETWORK CABLING SYSTEMS - GENERAL

.1 Work involves new network cabling from existing IT infrastructure to serve new and renovated areas. Base cabling systems on Panduit Category 6A horizontal copper cabling types.

.2 Work must be installed by system manufacturer's certified system installers/vendors who are certified and experienced in implementing selected data cabling system and to perform related testing programs.

.3 In addition, provide structured cabling system for auxiliary building systems such as intercom systems and BAS, AV, Intercom, WAP’s and security systems. Coordinate work between system vendors. Cabling for these systems are to be based on Owner’s standard herein this section unless otherwise approved in writing by Owner. Coordinate work with respective equipment vendors.

.4 Work includes but is not to be limited to following:

.1 provision of fibre optic cabling system; provision of fibre optic cabling for risers and intra-building backbone between LAN closets and for applications as noted on drawings; use of fibre optic backbone cabling to augment system if more than one (1) network switch is used and distance between switches exceeds 90 m (295') and for applications as shown and as required by BICSI standards;

.2 provision of category grade rating Category 6A cabling system for a complete networking within complex which can support use of intelligent network switches with Network Management capabilities;

.3 organized wiring in a structured cabling system using point to point distribution system incorporating modular terminations;

.4 provision of data and voice cabling, data and voice communications outlets, patch panels, patch cords and associated equipment;

.5 system testing and verification;

.6 coordination of system requirements and integration requirements with integrated systems;

.7 provision of required ancillary devices as required to complete various system extensions work.

.8 provision of required infrastructure of conduits, boxes, raceways, etc., necessary to support system.

.5 The local area network system to be "protocol neutral" and provide users access into a variety of resources from any location within building. Ethernet backbone to be utilized for system with intelligent network switches coordinating and managing data flow. Wiring configuration is based on "physical star" topology in which cabling runs emanate in radial pattern from data communications room in which intelligent switches are located.

.6 Network cabling system vendor to coordinate with Electrical Contractor to ensure that properly sized conduits, back boxes outlet boxes, junction boxes and floor boxes are provided of sufficient size as per EIA/TIA Standards to accommodate CAT 6 required Category rating system wiring and devices, with particular emphasis on bending radii of cabling. Conduit and boxes not meetings required Category rating standard requirements to be replaced to suit.

.7 System to be designed to support minimum 802.11a/b/g/n/ac standards.

2.3 HORIZONTAL COPPER CABLING

.1 Copper cable shall be Panduit's Vari-MaTriX Cable (Cat 6A, UTP horizontal cable). The inside 4 pair horizonal cable for facilities shall be blue jacketed plenum "LP" rated TX6Atm UTP Copper Cable with Vari-MaTriX Technology. In addition, performance Category 6A UTP Copper Cable must meet the following mechanical and performance criteria:

.1 Exceeds requirements of ANSI/TIA-568-C.2 Category 6A and ISO 11801 Class EA channel standards in a 4-connector configuration up to 100 meters

.2 Exceeds requirements of ANSI/TIA-568-C.2 and IEC 61156-5 Category 6A component standards

.3 Third party tested to comply with ANSI/TIA-568-C.2

.4 Meets requirements of IEEE 802.3af, IEEE 802.3at and IEEE 802.3bt for PoE applications

.5 UL Limited Power (LP) rated CMP-0.7A which eliminates the need to consult the PoE ampacity table in the NEC 2017 code regarding maximum bundle sizes

.6 Nominal cable diameter must not exceed 0.250"

.7 The nominal cable cross-sectional area must not exceed 0.05 in^2. Per the NEC 40% fill guidelines, the following minimum cable fill is required:

.1 --¾” conduit = 4

.2 --1” conduit = 7

.3 --2” conduit = 27

.4 --4” conduit = 119

.8 Installation temperature range: 32°F to 140°F (0°C to 60°C)

.9 Operating temperature range: -4°F to 221°F (-20°C to 105°C)

.10 Weight of cable not to exceed 32 lbs./1000 ft.

.11 The UTP cable must include an electrically discontinuous metallic barrier (Vari-MaTriX) to suppress the effect of alien cross talk allowing 10 Gb/s transmission. The metallic barrier is not bonded/grounded. The continuity of the metallic barrier is to be partitioned along the cable’s length into segments of varying length such that EMI immunity is uncompromised.

.12 To minimize jobsite floor space and reduce shipping expenses, one full 44”x 44” pallet must consist of 36 1000’ reels

.13 Descending length cable markings enable easy identification of remaining cable which reduces installation time and scrap

.2 Certified channel performance in a 4-connector configuration up to 100 meters and exceeds the requirements of ANSI/TIA-568-C.2 Category 6A and ISO 11801 Class EA standards swept up to 650 MHz for supporting 10GBASE-T transmission over twisted-pair cabling systems as part of the Panduit ® TX6A™ 10Gig UTP Copper Cabling System Certified component performance up to 100 meters and exceeds the ANSI/TIA-568-C.2 Category 6A and IEC 61156-5 Category 6A standards for supporting 10GBASE-T transmission over twisted-pair cabling systems

2.4 DATA/VOICE OUTLETS

.1 Data/voice outlets: Panduit CAT 6A Mini-Com TX6A series and meeting following specifications:

.1 flush wall mounting faceplate to fit on single gang recessed outlet box, complete with device bracket or provisions to hold jacks securely in place; with top and bottom labelling windows;

.2 faceplates: to match existing either stainless steel type or constructed of high impact, flame retardant, thermoplastic, as approved by Owner and reviewed by Consultant; mounted to outlet box and with bracket and matching screws; for unused ports provide blank inserts;

.3 faceplates for wall mount phone applications to include suitable mounting studs;

.4 modules: Category 6A, eight-position, RJ-45, T568A configuration pinned; Mini-Com TX6A modular style jacks to match existing as approved by Owner and reviewed with Consultant;

.5 modules to be of specific colours to identify each system and reviewed with Consultant and approved by Owner.

.1 Blue for Kidnet Data outlets,

.2 Yellow for Patient Monitoring Data Outlets,

.3 Confirm colors for other systems with Consultant prior to order.

.2 Modular furniture faceplates:

.1 modular furniture faceplates to be Panduit Mini-Com series and installed in furniture outlets that have a modular furniture knockout and unless otherwise noted, to consist of a minimum of 3 ports;

.2 each outlet to be installed with specified and designated termination modules; provide blank cover insert on unused openings;

.3 each outlet to relate to home run wiring back to designated patch panel; do not splice wiring runs;

.4 verify furniture manufacturer and model, and modular faceplate requirements prior to placing order;

.5 final colour and finishes approved by Owner and reviewed with Consultant.

.3 Wall mounted telephone outlets to include features as follows:

.1 required Category rating modular jack;

.2 wall plate of stainless steel construction;

.3 mounting studs on plate which are positioned to mount standard wall mount telephones with keystone adaptation flush to wall surface;

.4 accepts wall mountable phones with short patch cord connections to jack module.

.4 Telephone/voice jacks: Panduit; provided with suitable telephone wiring as approved by Owner and reviewed with Consultant; mount jacks on faceplates to Owner's standards, onto recessed outlet boxes; prior to ordering, confirm with Owner if telephone/voice jacks are to be revised to Cat 6A types same as data jacks.

2.5 PATCH PANELS

.1 Angled Patch panels: Panduit as follows:

.1 Modular angled patch panels model: CPPA48FMWBLY or CPPA24FMBLY, standard 8-position, RJ-45 style, FCC-compliant receptacle; panel frames to be black powder coated steel and sized in 24 or 48 port configurations for each rack mount unit.

.2 Mini Com TX6a modular jacks to match existing as approved by Owner and reviewed with Consultant;

.3 Panels to have individual port identification numbers on front and rear of panel.

.4 Provide separate panels for each system.

.2 Each jack connector module to have a T568A eight pin RJ 45 jack on front and IDC type connectors on back. Panels to mount onto standard EIA 19-inch racks or cabinets and have capability to be stacked in larger systems. Horizontal data and voice cabling for various telecom rooms to terminate onto patch panels provided into floor standing or wall mounting equipment enclosures, as detailed and as required.

.3 Patch panel system to include required accessories such as bezels, harnesses, pigtails, connectors, jumpers, and retaining rings, interlay racking panels, horizontal wire managers etc., to provide for patch cord management.

2.6 COPPER PATCHCORDS

.1 Patch cords: Panduit "CAT6A" TX6A-SD (work station) and TX6A-28 (TR) as follows:

.1 Category 6A patch cords constructed with polycarbonate 8-position plug, having vertically staggered, trifurcated gold-plated contacts;

.2 Patented tangled-free latch prevents sang an provides easy release patch cords with snag-less feature and integral to on each end; strain relief boot to be moulded. Label on patch cord provide identification or performance level, length, quality control number. Each patch cord is a 100% teste to component limits.

.3 Plugs meets all applicable ANSI/TIA-1096-A requirements and exceeds IEC 60603-7 specification.

.4 of specific colours to identify each system as confirmed with Owner and reviewed with Consultant.

.1 Blue for Kidnet Data outlets,

.2 Yellow for Patient Monitoring Data Outlets,

.3 Confirm colors for other systems with Consultant prior to order.

.2 Provide sufficient quantity of patch cords at patch panels to activate each port. In addition, include required patch cords, jumper assemblies to connect additional ports to active switches / servers. Confirm exact requirements with Owner and review with Consultant.

2.7 RACKS & VERTICAL MANAGERS

.1 Open type, equipment racks to be heavy duty type, standard EIA 19" free standing racks complete with but not limited to following requirements: Panduit part number R4P.

.2 Independent adjustable front and rear mounting rails

.3 Support equipment mounting depths from 3" to 41.5" and provide ventilation path for side ventilated switches for greater system flexibility

.4 Welded steel construction 2500 lb. load capacity provides greater stability

.5 Numerical rack unit identification. Allows for quick location of rack spaces speeding installation of rack mount items

.6 Fully bonded structure Two-hole ground lug attachment simplifies grounding to assure proper grounding technique

.7 Weld nut construction Eliminates the need for a second wrench, increasing speed and ease of assembly

.8 Multiple options for mounting, accessories. Accessories such as POU, spool brackets, zero RU brackets mount on posts or rails for greater application flexibility

.9 Universal equipment rails Rack unit identification can be set either “numbers up” or “numbers down” by flipping rail positions; shipped numbers up 7 feet and 8-feet versions Allows maximum utilization of available vertical space.

.10 Vertical Cable Management – Panduit patch Runner 2 series

.11 Push to close door design for easy operation

.12 Curved Fingers, support cables as they transition to vertical pathway eliminating the need for horizontal managers.

.13 Individual Fingers, aligns with rack spaces to simplify cable routing changes and keeping patch cords organized and neat.

.14 Integral Bend Radius Control, maintains cable bend radius ensuring network performance and system reliability.

.15 Each rack to include grounding provisions to meet previously listed standards, which include but are not limited to following provisions:

.1 copper ground strip mounted on side rail extending full height of rack;

.2 equipment jumper kits, to bond network equipment to rack ground strip;

.3 common bonding network to rack jumper kit, to bond rack to room common bonding network;

.4 hardware including, copper compression HTAPS, paint piercing washer kits, bonding screws and electrostatic discharge port kits.

.16 Racks to be of size and quantity to accommodate respective number of patch panel ports to suit number of required drops, quantity of network electronic components as directed by Owner’s network integrator, uninterruptible power supply unit and an additional 20% spare capacity for future expansion.

.17 Within LAN rooms, provide flexible steel type wire basket tray to manage cabling to and from racks. Refer to cable tray section for tray requirements.

.18 Panduit are acceptable rack manufacturers are listed network cabling system manufacturers.

2.8 PUNCHDOWN BLOCK TERMINATIONS

.1 Where telephone service cabling is identified on drawings it is to be terminated on BIX or 110 mounts and connectors, provide required punchdown blocks.

.2 Capacity of connectors to suit number of conductors. Confirm and coordinate exact type of termination means and ratings with the Owner and review with Consultant. Mounts to be suitable for wall mounting.

.3 BIX or 110 Series, 100 pair and 300 pair wiring blocks consisting of horizontal index strips with insulation displacement for termination of 4 pairs, and of ratings to suit applications as confirmed with owner. Wall mounting block to be with mounting legs to provide wiring space.

.4 Cross connect jumper wire, patch cords, cable HUB harness or pigtails as required to extend connections from blocks to patchpanels and to Owner's switches/servers.

.5 Connecting tool, termination kits, designation strips, labels, and wiring distribution rings.

2.9 SYSTEM VENDORS

.1 Vendor selected for provision of system to have following qualifications:

.1 being established communications and electronics contractor that has and currently maintains a locally run and operated business for at least five years and holds applicable provincial and local licenses;

.2 be authorized distributor or established franchisee (certified system vendor) for manufacturer of product/system proposed, be experienced in installation and testing of data cabling systems, with full manufacturer's warranty privileges and can provide post warranty service;

.3 employ technicians who are BICSI certified and or have attended and successfully completed manufacturer's technical certification classes for proposed system;

.4 show satisfactory evidence, upon request, that they maintain a fully equipped service organization capable of furnishing adequate inspection and service to system on a 24-hour/7-day basis;

.5 maintain at their facility necessary spare parts in proper proportion as recommended by manufacturer to maintain and service equipment being supplied.

.2 Vendors not meeting any of above qualifications may be disqualified at Owner's discretion and be replaced with qualified vendor.

PART 3 - EXECUTION

3.1 INSTALLATION - GENERAL

.1 Prior to start of work, notify Owner's Network Integrator/Project Manager and submit in writing the following information:

.1 name of installation contractor;

.2 name of supervisor on site;

.3 description of scope of work;

.4 duration of work;

.5 location of telecommunication closet / room number;

.6 name of project and location.

.2 Obtain permission of Owner's Network Integrator / Project Manager before commencing any work or accessing any telecom closet.

.3 Properly handle and install structured network cabling in accordance with manufacturer's specifications. Avoid undue pulling tension, abrasion, or rough handling to ensure that cables will permit transmission up to required category rating design speed for cables. Install cables without splices or cuts to ensure elimination of reflections, discontinuities, impedance mismatches, etc. maximum horizontal length of copper cabling from workstation to network switch is not to exceed 90 m (295') or less if recommended by system manufacturer to meet required category grade rating performance standards. Maximum length of patch cables (either cross connects or interconnecting with electronic equipment to connect devices at work area outlet), to be a total of 10 m (30'). Maintain system manufacturer's minimum channel lengths as confirmed with system manufacturer. Provide cable loops in accordance with manufacturer's instructions.

.4 Run horizontal, UTP cables continuous from end to end with no splices. Install horizontal cables in Star topology, emanating from rack mounted patch panel(s) and terminating on data outlet faceplates in rooms or other workstation locations.

.5 Terminations to involve as little outer jacket removal as possible and cable pairs "untwisting" is to not exceed 6 mm (¼").

.6 Unless otherwise noted or where cable tray is shown for such use, run cabling in conduit. Install pull cords for future use, in conduits extending between floors.

.7 Provide slack cable to allow for minor workstation relocations. Provide a coil of slack cable of an approximate 2 m (6') length for each workstation outlet run.

.8 Generally, no more than two (2) 90-degree changes in direction are recommended for cable installed in conduit without pull boxes and not more than 40% fill ratio. Confirm exact conduit bending radii restrictions and fill ratios with system manufacturer and comply with those standards.

.9 With consideration in minimizing alien crosstalk to levels as per BICSI standards and manufacturer's standards, dress cables in a neat and orderly fashion from entrance of communications closet to relay racks using vertical and horizontal cable management trays and paths. Do not exceed manufacturer's distance limitations to maintain required category rating performance standards.

.10 Care to be taken to ensure that during installation, nicks, abrasions, burning and scuffing of cable is prevented. Replace cables found to be damaged regardless of whether cable passes category grade rating or fibre performance testing standards.

.11 Secure bundled cables transitioning between floors via ladder cable tray, to vertical ladder sections with Velcro wraps. Use waterfall (rounded transition) fittings for cable changing from a horizontal path to a vertical one. This is to maintain minimum bend radius for cabling system. Support cables running through risers between floors such that they are properly supported for their weight, especially in situations with high pair count cables and large bundles.

.12 Electrical Contractor and telecommunication system vendor to provide coordination of structured cabling system with other systems as required. Review data drop interconnections with various trades and provide data drop to equipment as required.

.13 Required necessary drilling and anchoring components to be installed before any horizontal cable is installed.

.14 Route horizontal cable into equipment racks/enclosures and neatly bundle with Velcro cable ties. Maximum number of cables per bundle to be 25.

.15 Securely mount fire retardant plywood on wall in each telecommunications room or closet.

.16 Review installation of conduits and boxes and advise Electrical Contractor where products do not comply with specified category rating standards. Ensure that products are replaced as required to meet standards.

.17 Where conduits and/or cable tray is not being provided, conductors within accessible ceiling spaces to be properly bundled using "Velcro" type wraps and supported with "J" hooks. Secure "J" hooks to ceiling slab structure. Install conductors following building lines. Do not fastened conductors to suspended ceiling support systems. Obtain Consultant's approval in use of "J" hooks. Unless otherwise noted, drops down from ceiling spaces to consist of cabling installed in vertical conduits running down within walls to outlet boxes and terminating onto jacks.

.18 For horizontal copper backbone cabling, multi- pair conductor cabling is preferred. If available only in limited number of pair cabling, provide multiple runs to provide quantity as identified on drawings, and increase conduit diameters to suit exact number requirements, in accordance with of standards and codes.

.19 Cables wraps are to be Velcro type and are not to be over tightened.

.20 Provide grounding and bonding requirements as specified in Section entitled Grounding and Bonding.

3.2 PENETRATION THROUGH FIREWALLS

.1 Provide a conduit sleeve where horizontal cables penetrate firewalls. Size conduit sleeve at 40% fill ratio with a plastic bushing at both ends.

.2 After conduit sleeve is installed, fill opening around conduit with firestop and smoke seal materials.

3.3 INSTALLATION OF PATCH-PANELS AND ACCESSORIES

.1 Review existing patch panels for spare ports. Confirm with Owner that spare ports may be used for this project and use if Owner approves. If spare ports are not available, provide patch-panels onto existing space of racks in locations as confirmed with Owner. Where space is not available in existing racks, provide wall mounted rack.

.2 Provide terminating hardware and connectors to suit incoming and outgoing cabling. Clearly identify each port. Provide patch cords as required. Install devices in accordance with system manufacturer's requirements.

.3 Terminate both data and voice horizontal cabling onto patch-panel punch downs using manufacturer's recommended tools. Bundle cabling in neat configuration and secure to patch-panels and rack assemblies. Typically dedicated separate patch panels are required for data and voice.

.4 Install rack enclosures on walls. Neatly bundle wiring within wiring management channels. Do not over tighten Velco straps. Ground racks as required.

3.4 INSTALLATION OF TERMINATION HARDWARE

.1 For telephone service conductors as detailed, provide BIX/110 required punch down connectors and mounts on hardwood backboards on walls. Refer to drawing details. Design system layout to best suit incoming and outgoing cables. Properly punch down cabling with manufacturer's required tool and label each connector as required.

.2 Run interconnect cables neatly secured and bundled across connectors and between banks of mounts. Use D-rings to their full advantage. Neatly bundle pigtails and secure to IDC connectors.

.3 Where wall mounted, align mounts in straight formations to provide a neat installation and to minimize interconnect wiring lengths.

.4 Where horizontal cables are terminated to patch panels, provide appropriate patch cords/ jumper cables to interconnect patch panel ports to respective wall mounted punch down blocks.

.5 Clearly and properly identify each cable and block terminations.

.6 Co-ordinate with Owner's network integrator to determine exact requirements for telephone service interconnections.

3.5 INSTALLATION OF OUTLETS

.1 Connect each data/voice outlet with a 4 pair, UTP cable. Test and identify each outlet and faceplate. Wire and connect data/voice jacks back to respective dedicated racks in LAN/TEL rooms. As detailed, extend voice cabling from voice patch panels to wall mounted BIX/110 connectors, providing patch cords, cross connects/jumpers, etc. as required.

.2 Provide outlet jack/faceplate configuration as detailed on drawings.

.3 Drawings identify data jacks for wireless access point receivers (antennae). These locations are approximate. Confirm exact locations during onsite radio frequency studies. Allow for jacks to be repositioned up to 4m (15') to suit results of studies. Perform studies after completion of construction of interior structures. If studies are not performed at discretion of Owner, obtain direction from Consultant to leave slack coiled length of cable on each run, allowing for repositioning.

3.6 SEPARATION OF DATA COMMUNICATION CABLES FROM SOURCES OF ELECTROMAGNETIC INTERFERENCE

.1 Separate data communication cables from sources of electromagnetic radiation in accordance with standard ANSI/TIA/EIA-569, Owner's Standards and following:

.2 FT-6 rated data cabling raceway and power conductors (2 KVA power circuits) raceway require 125 mm (5") clearance;
- .1 for fluorescent luminaires, required clearance is 300 mm (12");
- .2 clearance increases up to 600 mm (24") for power circuits over 5 KVA.
- .3 for large motor, transformers, power panels, etc., required clearance is 1m (39");
- .4 route cables to avoid direct contact with steam piping, hot water piping or other heat sources to avoid thermal degradation.

3.7 INSTALLATION OF RACKS

.1 Provide racks and secure to floor with bolts and concrete anchors.

.2 In locations where more than one rack is required, butt multiple racks together. Provide wiring channel interconnection such that wiring from rack to another is not exposed.

.3 For open racks, provide metal raceway chimney channel for conductors extending down from ceiling, such that wiring is not exposed. Secure channel to rack and ceiling.

.4 Run wiring neatly bundled within wiring management channels. Do not over tighten Velcro tie wraps such that they deform cable jacket. Velcro straps to easily slide along length of cable. Velcro tie wraps used in plenum spaces to be CMP/FT-6 rated.

.5 Protect cable from any obstructions using appropriate grommeting in roof of rack.

.6 Properly ground and bond rack and equipment to room ground bus as per specifications and to standards of TIA/EIA 607.

3.8 IDENTIFICATION

.1 A complete identification system to Owner's standards shall be provided that clearly designates the following:
- .1 the horizontal cable;
- .2 the workstation (or faceplate);
- .3 the horizontal/passive patch panel port;
- .4 the network switches active patch panel port;
- .5 the patch cords;
- .6 the network switches rack.

.2 Obtain Owner's approval of identification formats, prior to start of work. Submit proposed identification system and nomenclature with shop drawing submission.

.3 All cable and workstation identification shall be recorded in a hard copy "CABLE IDENTIFICATION LOG" which is to be handed over to the Owner after cable testing and certification is complete. A duplicate copy shall also be forwarded to the Consultant.

3.9 TESTING AND VERIFICATION

.1 Structured cabling system certification to include 100% cable testing and verification for an EIA/TIA required category 6 grade rating solution.

.2 Perform verification of each cable and document on a cable testing sheet forming part of hard and soft copy documentation supplied at end of installation. Testing sheets to list detailed performance test measurements as requested and as required to prove compliance with referenced standards. Also include summary sheet of passes, failures and rectified failures. Submit sample of test sheet with shop drawings. Include in report:
- .1 test results for each cable installed;
- .2 spreadsheet that contains cable identification number and room number where cable is installed;
- .3 summary sheet of passes, failures and rectified failures;
- .4 identification of installation date and contractor name.

.3 Comply with system manufacturer's testing and certification procedures.

.4 Perform testing using Category 6A testers such as Fluke Networks Versiv family, or equivalent. All twisted-pair copper cable links shall be tested for compliance to the requirements in ANSI/TIA for the appropriate Category of cabling installed using a test unit meeting a minimum IEC IIIe level of accuracy. Submit with shop drawings copy of calibration certificate issued by tester manufacturer's authorized technician identifying calibration within one year of use for testing on this project. Testing to include, but not be limited to following:
- .1 wire map
- .2 cable length;
- .3 attenuation;
- .4 near end crosstalk (next);
- .5 power sum near end crosstalk (PSNEXT);
- .6 equal level far end crosstalk (ELFEXT);
- .7 power sum equal level far end crosstalk (PSELFEXT);
- .8 return loss;
- .9 ACR;
- .10 power sum ACR;
- .11 end to end continuity;
- .12 opens or shorts;
- .13 pair polarity.

.5 Tester to include required modules for certification testing of fibre optic cabling. Perform fibre testing on each fibre in completed end-to-end system. Do not splice cables except where approved by Consultant. Testing to consist of an end-to-end power meter test performed per TIA/EIA-455-53A and. Provide system loss measurements at 850 and/or 1300 nanometers for multi-mode fibres and 1310 and/or 1550 nanometers for single mode fibres. These tests also include continuity checking of each fibre.

.6 For horizontal cabling system using multi-mode optical fibre, measure attenuation in one direction at either 850 nanometer (nm) or 1300 nm.

.7 Test backbone multi-mode fibre cabling at both 850 nm and 1300 nm (or 1310 and 1550 nm for single mode) in at least one direction.

.8 Conduct test set-up and performance in accordance with ANSI/TIA/EIA-526-7 and/or ANSI/TIA/EIA-526-14 Standards, and to manufacturer's application guides.

.9 Perform attenuation testing with a stable launch condition using two-meter jumpers to attach test equipment to cable plant. Light source to be left in place after calibration and power meter moved to far end to take measurements.

.10 Acceptable loss measurements for 50-micron laser optimized solution at 850 nm wavelength is not to exceed 2.5 db.

.11 Since optical signal attenuation at one wavelength is independent of attenuation at a second wavelength, measure attenuation of channel at both standard wavelengths (850mm and 1300mm) for backbone links.

.12 Replace cable not passing testing procedure, in its entirety. No splicing is permitted

.13 Reports:

.1 Submit test results to system manufacturer and obtain manufacturer's certificate of approval of system. Submit detailed indexed test report in a 3 - ring binder with manufacturer's certificate of approval of installation and testing of system and covering letter from company responsible for installation and testing of system stating accuracy of report. Letter to be signed by company's authorized testing technician. Document testing and reports with date and time of testing, testing technician's name and signature and specification Section number that test fulfilled. Submit minimum 2 hard copies and electronic copy to Consultant for review.

.2 Submit minimum 2 hard copy of report including test reports in digital format (pdf) loaded on USB type memory flash drive.

.3 Confirm format and number of hard copies with Owner.

END OF SECTION

PRODUCT LIST:

Line	Part Number	Description	Qty	UOM	More Information
1	R4P	30" Deep 4 Post Rack	1	Piece	Panduit.com product page
2	CJ6X88TGBU	Mini-Com Module, Cat 6A, UTP, 8 pos 8 wire, Universal, Blue, TG Style	1	Piece	Panduit.com product page
3	PUP6AV04BU-G	Copper Cable, Cat 6A, Vari-MaTriX, 4-Pair, 23 AWG, UTP, CMP, Blue, 1000ft/305m	36000	Foot	Panduit.com product page
4	FSDP912Y	9um OS2 12 Fiber Indoor Distribution Cable, Plenum (OFNP), 900um Buffered Fibers	150	Foot	Panduit.com product page
5	FSDP948Y	9um OS2 48 Fiber Indoor Distribution Cable, Plenum (OFNP), 900um Buffered Fibers	1000	Foot	Panduit.com product page
6	CFFPL4BL	Furniture Faceplate, 4 Port, Black	1	Piece	Panduit.com product page
7	CFG2WH	GFCI Frame, 2 Port, White	1	Piece	Panduit.com product page

8	UTP28X8INBU	Cat 6A 28AWG UTP Patch Cord, CM/LSZH, Blue, 8 inch	1	Piece	Panduit.com product page
9	CFG4WH	GFCI Frame, 4 Port, White	1	Piece	Panduit.com product page
10	UTP28X10BU	Cat 6A 28AWG UTP Patch Cord, CM/LSZH, Blue, 10 feet	1	Piece	Panduit.com product page
11	UTP28X7BU	Cat 6A 28AWG UTP Patch Cord, CM/LSZH, Blue, 7 feet	1	Piece	Panduit.com product page
12	CPPA48FMWBLY	Patch Panel, 48 Port, Modular Angled Flush Mount, Black	1	Piece	Panduit.com product page
13	CPPA24FMWBLY	Patch Panel, 24 Port, Modular Flush Mount, Black	1	Piece	Panduit.com product page
14	FCE1U	Rack Mount Fiber Enclosure 1RU	1	Piece	Panduit.com product page
15	FCE4U	Rack Mount Fiber Enclosure 4 RU	1	Piece	Panduit.com product page
16	FLCS2/9SOCU9BU	Fiber LC-UPC Splice-On Connector for 250/900um Fiber, 9um Singlemode	10	Piece	Panduit.com product page
17	FAP12WBUDLCZ	FAP w/12 LC Dupl Adapters (BU) Zirconia	1	Piece	Panduit.com product page
18	F92ERLNLNSNM002	OS2 2 Fiber 1.6mm Jacket Patchcord Riser LC Duplex to LC Duplex Std IL - 2 Meters	1	Piece	Panduit.com product page
19	PR2VFD08	PATCHRUNNER2 VERTICAL MANAGER AND DOOR, 8in WIDE, 7ft TALL, FRONT ONLY	1	Piece	Panduit.com product page
20	PR2VFD12	PATCHRUNNER2 VERTICAL MANAGER AND DOORS, 12in WIDE, 7ft TALL, FRONT ONLY	1	Piece	Panduit.com product page
21	PZRFE4U	Zone Cabling Raised Floor Enclosure, 4" High (102mm)	1	Piece	Panduit.com product page
22	PZRFC	Panzone Raised Floor Cover For PZRFE	1	Piece	Panduit.com product page
23	PZICEA	Zone Cabling Active In-Ceiling Enclosure	1	Piece	Panduit.com product page
24	CPP48FMWBLY	Patch Panel, 48 Port, Modular Flush Mount, Black	1	Piece	Panduit.com product page
25	CPP24FMWBLY	Patch Panel, 24 Port, Modular Flush Mount, Black	1	Piece	Panduit.com product page

PART 1 - GENERAL

1.1 SECTION INCLUDES

.1 The specifications for the visual nurse call system are a description of the various components with the minimum operational sequence requirements. System shall comply with all applicable codes.

.2 When all systems are completely installed and ready to be used, the successful supplier shall thoroughly instruct those appointed by the Owners in the complete operation of all systems provided by him for a minimum time of 4 hours (Two 2 hour sessions at times as directed by Owner to suit staff's requirements) unless in the opinion of the Consultant a longer instruction period is necessary.

1.2 ACTION SUBMITTALS

.1 Submit shop drawings and product data in accordance with Section 01.

.2 Product Data: Provide manufacturer's catalogue information showing dimensions, colours, and configurations.

1.3 INFORMATIONAL SUBMITTALS

.1 Submit manufacturer's installation instructions.

1.4 REGULATORY REQUIREMENTS

.1 Provide products listed and classified by CSA (Canadian Standards Association).

PART 2 - PRODUCTS

2.1 MANUFACTURERS

.1 The systems shall be as manufactured by:

.1 Austco (no other manufacturers will be entertained)

2.2 EXISTING NURSE CALL SYSTEM

.1 The existing Austco Tacera nurse call system presently serves the existing hospital and is to be retained to accommodate the additional nurse call devices in the renovated areas. Include for and engage Hospital's existing system vendor Austco (contact Aaron Rosler, Email: Aaron.Rosler@austco.com, phone: +1-416-508-7400) to provide system work and products.

.2 Nurse Call scope of work will include for provision of:

.1 co-ordination of system work to clearly identify responsibilities of system vendor and Electrical Contractor;

.2 all required conduits and boxes, power feeders, to suit system requirements and as per requirements of Section 26 05 33.13 and as per system manufacturer's requirements;

.3 installing all nurse call system components, wiring, wiring accessories, identification and labelling of each wiring run;

.4 all required nurse call system programming;

.5 all nurse call system testing, inspection and verification work upon completion;

.6 testing and verification reports signed by manufacturer's authorized representative and by Electrical Contractor;

.7 nurse call vendor's provision of technical assistance and supervision of Electrical Contractor with regards to conduit, wiring and component installation requirements.

.8 Additional stations and other products to be 100% compatible to existing system.

.9 All required modifications to existing area control units and floor control stations (master and submasters);

.10 All required additional control units;

.11 All required software programming; Coordinate with owner where the alarms are to be displayed when the Code Blue is activated.

.12 bed stations;

.13 washroom stations;

.14 staff stations and duty stations;

.15 emergency stations;

.16 centralized code blue (cardiac arrest) stations;

.17 code white stations;

.18 code blue (cardiac arrest) stations;

.19 corridor dome lights;

.20 paging speakers;

.21 wiring as per system manufacturer's requirements, run in conduit and provision of required ancillary devices;

.22 ring tones to match existing;

.23 nurse call devices to ring at consoles designated by Owner.

.3 The specifications for this system are a description of the various components with the minimum requirements of the operations sequence, facilities and features required.

.4 Dome lights shall be complete with transparent dome, stainless steel trim, backbox and lamps, white, red, blue and yellow.

.5 Wiring shall be minimum 16 gauge copper in twisted pairs with overall PVC jacket and in accordance with manufacturer's requirements. All wiring shall be installed with minimum ¾" (19mm) conduit unless otherwise noted.

.6 The system to be UL 1069 listed as a Nurse Communications Network. The system to be capable of interconnecting with the hospital's LAN (Local Area Network). This connection to be minimal and utilize only one Ethernet 100 Mbps (or optionally 1 Gb) connection to accomplish all information exchange. The HL-7 standard shall be to match existing system.

.7 Components and the system as a whole to meet or exceed the minimal standards issued by CSA, EEMAC and ULC. Work in conjunction with this installation to meet the provisions of the local governing electrical code, edition of CSA Z32 enforced by local governing authority and any applicable local codes.

.8 Each major component to bear the manufacturer's name, catalogue number, place of manufacture and CSA/ULC label.

.9 Devices located within areas where abuse can occur such as the Mental Health Unit areas, to be constructed with vandal-proof and shatter resistant features and tamperproof access/mounting screws.

.10 The system to be compatible and include provisions to integrate fully to systems such as code white systems, infant abduction, asset tracking, and patient wandering systems such that the central station display annunciates and displays alarm information available from each integrated system, such as the unique address of alarm transmitter, exact location of alarm, patient's bed number, etc.

In addition the system performs required responses to alarms, system alarm resets, and basic controlling features of the integrated systems. Features and functions to be programmable to suit Owner's specific requirement. Include selectively programmable system features as confirmed with Owner's Project Manager in writing prior to system programming.

.11 Priority level names to be displayed as alpha characters, and the room numbers to be user-programmable.

.12 The room numbers to be numeric with alpha characters for descriptions.

.13 Visible annunciation to be by corridor and zone lights associated with each call.

.14 System to permit the nurse at the communications station to hear the slightest whisper or movement of patients in rooms.

.15 Failure of the voice intercom portion of the system to not interfere with the visual signal system.

.16 System to use multiplex technology, requiring no unique wiring on a per station basis.

.17 System to have automatic supervision of associated bedside patient stations, emergency stations, staff stations, code blue/white stations, zone lights, dome lights and consoles, with an indication at the console of which station or stations failed.

.18 System to provide for transfer of one or more individual or groups of stations from one console to another without mechanical switches or additional predetermined wiring of the stations.

.19 System to be configurable by call priority level to allow the attendant to set any levels of staff reminder on a manual basis or be automatically set on answering the call from the console.

.20 System user features and programmable access to make system changes to be password protected to ensure that only authorized personnel can make changes.

.21 The system to contain built-in diagnostics to monitor and diagnose system operation.

.22 The system to have the capability to program/create a list of staff, for the purpose of individual assignment to each patient/bed as a primary or alternate caregiver. Once assigned by shift, calls placed by the patient may be automatically directed to the assigned staff currently on duty, alerting them of the pending call and subsequent care givers if necessary.

.23 Ability to program individual staff to patient assignments easily from work station terminal at the beginning of each shift by selecting the staff's name and changing their personal assignment screen. The staff-to-patient assignments are established directly using the patient's room and bed. Additionally the staff may receive all call priorities or only a selected subset of call priorities.

.24 Capabilities for the nurse follow feature to be included. The basic nurse follow function, when activated from the master station, to allow a staff member to leave the master station and be notified of a call at a designated room and bed.

.25 The system to provide audio paging to individual stations or groups of stations using an auxiliary amplifier located within the central equipment cabinet.

.26 Code blue calls placed from any room to be annunciated on a centralized digital code blue display panel(s) and on the PC terminals.

.27 The system to be provided with the activity reporting and management system interface software program to record all patient calls and related time-based activities and to provide for recall, summary reporting and printing of statistical information from a computer station provided with system. System software to perform automatically daylight saving time adjustments to the Eastern Time Zone.

.28 The system to be of modular construction. Components used in signal control to be plug-in for easy replacement and maintenance. A solid-state plug-in flasher to be incorporated to provide the steady and interrupted alerting tones and indicating lights.

.29 The normal and emergency call tones generated at the console and duty stations to be preprogrammed at different rates for easy identification. The alerting tones to be electronically generated. Tone level to be adjustable or turned off as required during night hours.

.30 Patient stations, emergency stations, and staff/duty stations to be installed into standard electrical backboxes.

.31 The system to be capable of side-rail communications capability including visual and audible annunciation of a disconnected bed.

.32 The system sequence of operation to be confirmed with Owner. This sequence is generally for pricing purposes and exact sequence of operation to be programmable to suit Owner's exact requirements. Confirm exact sequence with Owner and Consultant, in writing prior to start of work.

PART 3 - EXECUTION

3.1 INSTALLATION

.1 Coordinate work of each trade for scheduling, demolition, rough-in, power and conduit requirements, installation and testing.

.2 Provide complete visual nurse call systems as shown on Drawings and as specified.

.3 Provide specified various nurse call systems components in areas as shown and as required. Programme system on servers/terminals. Obtain Owner's approval of room nomenclature prior to start of programming. Customize software to suit Owner's specific applications. Program sequence of operation and user information as required. Include for system manufacturers authorized representative to program systems. Programme exact programming requirements as confirmed with Consultant and/or Owner in writing prior to start of Work. Utilize manufacturer's recommended configuration chart during installation and record respective device names, serial number, room name and number and comments, as outlined on sheets.

.4 Provide control units and stations and install into locations. Install components at the mounting heights as noted on drawings and as required and confirmed with Consultant. Generally, wall mounted devices onto recessed boxes. Provide suitable conduits and backboxes to accommodate device installations. Confirm back box requirements with system vendor prior to roughing-in.

.5 Generally, install dome lights located between doorframe and underside of suspended ceiling. Interconnect patient room smoke detectors to dome lights and remote communicators. Coordinate work with fire alarm system technicians of fire alarm system vendor. Install zone lights to ceilings on recessed boxes in locations confirmed with Consultant and coordinated with other systems and equipment. Confirm colours for dome lights with Consultant prior to ordering.

.6 Provide minimum ¾" (19mm) conduit from each device to the ceiling and provide deep back boxes as specified.

.7 Provide system wiring. Wiring to be copper conductor, colour coded, and in accordance with the system manufacturer's recommendations and instructions. Connect equipment in accordance with the system manufacturer's certified wiring diagrams and instructions and under direct supervision of the manufacturer. Provide and arrange for authorized system manufacturer's representative to make all final equipment connections. Run conductors in conduit or in cable tray, as identified on drawings. Use of cable hangers system such as J hooks are not acceptable unless approved in writing from Consultant and/or unless such use is specifically noted on drawings.

.8 Obtain required training from manufacturer's representative on any special installation procedures. Install devices and perform work in accordance with the manufacturer's instructions and requirements and in accordance to applicable codes of the governing authorities having jurisdiction.

.9 Confirm locations of devices with Consultant prior to roughing-in.

.10 Perform system integration connections to various systems as required. Include costs for systems service vendors to perform required integration and programming requirements.

.11 Ground and bond system as required by local governing electrical code and authority and system manufacturer.

.12 Provide a lamacoid identification nameplate for each enclosure. Confirm wording of identification nameplates and colour finishes of devices with Owner prior to ordering.

.13 When work is complete, arrange for attendance at the site of the system manufacturer's authorized representative to make final equipment connections and provide inspection, testing, adjusting and verification requirements.

.14 Turn over to Consultant/Owner, specified loose accessories.

3.2 SYSTEM TRAINING

.1 Provide to Owner's designated staff, onsite training sessions to Owner's designated personnel on the operation and maintenance procedures with regards to the system. Each session may be held on different days and locations, at Owner's discretion. Exact times and dates to be coordinated with and approved by Owner.

.2 The following are required from Nurse Call System supplier, one week before each training session:

.1 an easy to read manual describing the features, providing trouble-shooting guidelines;

.3 Schedule

.1 Training on the operation of the Nurse Call System for Maintenance staff:

.1 Two sessions, 1 hour duration for up to ten (10) people each session.

.2 There should be enough copies of printout regarding repair of parts, for each participant.

.2 Training on the operation and managing software for Nurse Managers, Program Service Managers, Program Director, Operations Directors, VP Programs, Director of Organizational effectiveness and Risk Management and designate, Program Assistant:

.1 Two sessions, 1 hour duration for up to ten (10) people each session.

.2 There should be enough copies of handouts on summary of training, for each participant.

.3 Training for Nurses will be for the operation only. Allow for four (4) training days. At each training day, the training schedule to include:

.1 minimum four (4) 1 hour sessions spread out over the day at times directed by Owner;

.2 the number of nurses to be accommodated to be as later directed.

.4 Provide training/coordination on access and networking issues for Owner's computer network for one session, one hour duration for up to 8 people. There should be enough copies of handouts for technical information for networking and edit access.

.4 Include for professional recording of and copying onto CD/ DVD digital video disk of operation and maintenance procedures.

END OF SECTION

PART 1 - GENERAL

1.1 SECTION INCLUDES

.1 Modifications to existing fire alarm system, relocating and new fire alarm devices as indicated on the drawings, and system verification to the appropriate codes and standards. Complete systems shall be left ready for continuous and efficient satisfactory operation.

.2 New devices connected directly to the existing fire alarm system shall of the manufacturer's current product selection, and to match the existing system.

.3 Verify system upon completion of installation and submit verification report to the Consultant with close-out documents and as-built drawings.

1.2 RELATED REQUIREMENTS

.1 Section 26 05 33.13 – Conduit for Electrical Systems.

.2 Section 26 05 33.16 – Boxes for Electrical Systems.

.3 Latest fire alarm verification report.

1.3 REFERENCES

.1 The publications listed below form a part of this specification. The publications are referenced in text by the basic designation only. Comply with latest edition / amendment referenced Code/Publication.

.1 Ontario Building Code.

.2 Ontario Fire Code.

.3 ULC-S524 Installation of Fire Alarm Systems.

.4 ULC-S537 Verification of Fire Alarm Systems.

.5 Ontario Electrical Safety Code.

.6 All requirements of the Authority Having Jurisdiction (AHJ).

1.4 SUBMITTALS

.1 Provide submittals to the Consultant for review in accordance with Section 01.

.2 All references to manufacturer's model numbers and other pertinent information herein is intended to establish minimum standards of performance, function and quality.

.3 Shop Drawings

.1 Include sufficient information, clearly presented, to determine compliance with drawings and specifications.

.2 Include manufacturer's name(s), model numbers, ratings, power requirements, equipment layout, and device arrangement.

.3 Show annunciator layout and main control panel module layout, configurations and terminations.

.4 Show device layout, complete riser diagram, and auxiliary functions.

.5 Show revised system programming.

.6 The supplier of the system shall prepare a complete zoning schedule and artwork layout for active graphic to be included with submittal package.

.4 Manuals

.1 Submit complete operating and maintenance manuals listing the manufacturer's name(s) including technical data sheets (with model numbers to be used indicated).

.2 Wiring diagrams indicating terminals and the interconnections between the items of equipment.

.3 Provide a clear and concise description of operation which gives, in detail, the information required to properly operate the equipment.

1.5 QUALITY ASSURANCE

.1 Approvals

.1 The system shall have proper listing and/or approval from the following nationally recognized agencies:

.1 FM Factory Mutual.

.2 UL Underwriters Laboratories Inc.

.3 ULC Underwriters Laboratories Canada.

.2 The fire alarm control, panel shall meet the modular listing requirements of ULC. Each subassembly of the FACP, including all printed circuit boards, shall include the appropriate ULC modular label.

.2 Fire alarm shall conform to the Building Code, Ontario Regulations 925/75 and as amended subsequently.

.3 Fire alarm system installation shall conform to ULC Standard S524-M, latest edition.

.4 All devices/components shall be suitable for the locations, environment, temperatures in which they are to be installed.

.5 The fire alarm system shall be manufactured by an ISO 9001 certified company and meet the requirements of BS EN9001: ANSI/ASQC Q9001-1994.

.6 The FACP and peripheral devices shall be manufactured 100% by a single manufacturer (or division thereof).

1.6 WARRANTY

.1 All work performed and all material and equipment furnished under this contract shall be free from defects and shall remain so for a period of at least one (1) year from the date of acceptance.

PART 2 - PRODUCTS

2.1 EXISTING SYSTEMS

.1 The existing JCI/Tyco fire alarm system serving the building to be retrofitted to serve renovated areas. Additional devices to be 100% compatible with and of same manufacture as per existing system. Work shall include provision of all necessary control panel and annunciator work of existing system to accommodate integration of additional system.

The JCI/Tyco contact information is:

Calogero Cavarretta
Tyco Integrated Fire & Security
2400 Skymark Ave
Mississauga, ON L4W 5K5
Tel: 905-212-4499
Mobile: 416-200-5796
Calogero.cavarretta@jci.com

.2 Include for and engage Owner's existing JCI/Tyco fire alarm system vendors authorized technicians to provide and perform required system products and work. Vendor must be JCI/Tyco authorized vendor as approved by Owner. Obtain confirmation of vendor and contact information from Owner prior to pricing. Use of vendor cannot invalidate any existing manufacturer's warranties.

.3 Verify with existing fire alarm system manufacturer during Bid period, the exact requirements needed to provide renovation work. If necessary, visit site with manufacturer to review existing conditions. Confirm and coordinate exact work responsibilities with system vendor. Items of clarification or proposed revisions to Bid Documents must be reviewed with Consultant during Bid Period.

.4 In areas of high abuse such as mental health areas, devices to include vandal resistant, anti-ligature, tamperproof features such as guards, fasteners requiring use of special tools and fasteners not exposed.

2.2 EQUIPMENT AND MATERIAL, GENERAL

.1 Review latest verification report, and review existing system during tender walkthrough and note all required modifications.

.2 All equipment and components shall be new, and the manufacturer's current model.

.3 All equipment and components shall be installed in strict compliance with manufacturers' recommendations.

.4 Modify control panels and annunciators to supervise and annunciate additional and relocated devices. Additional devices shall be devices that are 100% compatible with existing controls and be ULC listed and labelled for connecting to respective control units. Include for manufacturer's authorized representative to perform control panel/transponder work, provision of required additional devices and to reprogram system software to accommodate renovation work.

.5 Additional devices to be ULC listed and labelled devices suitable for fire alarm applications. Power supplies and other components to be CSA approved where required by local governing authorities and codes. Refer to drawings for additional device requirements.

.6 Exact type of device to be used in each area of installation to be as recommended by system manufacturer to suit specific applications and to be approved for such use as per ULC standards. Devices in non-climatic controlled areas to be weatherproof, corrosion resistant and ULC listed for use in below freezing temperatures. System manufacturer to be responsible for ensuring compliance with these requirements.

2.3 CONDUIT AND WIRE

.1 New conduit and wire for new zones and new devices to Section 27 15 01.19.

.2 Conduit

.1 Conduit shall be in accordance with the Electrical Safety Authority (ESA), local and provincial requirements.

.2 All wiring shall be installed in conduit or raceway to Section 26 05 33.13 and Section 26 05 33.23.

.3 Wire

.1 All fire alarm system wiring to suit new devices shall be new.

.2 CSA approved and ULC listed wire and cable, approved for fire alarm circuits; with colour coded, insulated solid copper conductors; wiring shall be in accordance with local, provincial and national codes and as recommended by the manufacturer of the fire alarm system. Number and size of conductors shall be as outlined in the Ontario Electrical Safety Code and as recommended by the fire alarm system manufacturer.

.3 All wire and cable shall be listed and/or approved by a recognized testing agency for use with a protective signalling system, as outlined in the Ontario Electrical Safety Code.

.4 To be mechanically protected to satisfaction of local fire authority.

.4 Terminal Boxes, Junction Boxes and Cabinets:

.1 All boxes and cabinets shall be listed for their purpose and use.]

PART 3 - EXECUTION

3.1 VERIFICATION OF CONDITIONS

.1 Conduct an impedance test of initiation and signal circuits, and submit report to the Consultant. Report any discrepancies in circuit loading.

3.2 MONITORING OF SYSTEMS

.1 In area that remain occupied and used by Owner during Work, monitoring and supervision of existing fire alarm system serving renovated areas, to be daily monitored to ensure that system is left in proper operating condition at end of each working day. Include for but not be limited to performing following:

.1 under presence of Owner's representative, check each morning and evening (start and end of work) of each day, system to ensure that it is in proper working condition;

.2 if portions of system are not in proper working order, provide temporary bypass wiring (if fire alarm system, must be subject to approval of local fire authority), and/or provide supervisory personnel to monitor systems for area affected;

.3 document and sign off with Owner's representative signing off also, each respective daily check condition;

.4 ensure that work to system does not affect portion of system serving areas outside of renovation/working areas.

3.3 INSTALLATION

.1 Provide additional components and retrofit work as required. Locate existing head end equipment and annunciators.

.2 Confirm exact sequence of operation of system with Owner and review with Consultant prior to start of Work. Obtain approvals from local fire authority. Program approved sequence of operation to satisfaction of Owner and review with Consultant.

.3 Work in conjunction with this installation to meet requirements of latest editions of local governing building code, local governing electrical code, ULC Standards including Installation Standard CAN/ULC-S524, and any applicable local governing codes. If any requirements of these specifications are different, omitted or contrary to ULC-S524 Standard, then ULC Standard governs and overrides these specifications, but in no instance will standards established by drawings and specifications be reduced by any of Codes referred to previously. Control units and annunciators to be in accordance to latest requirements of ULC Standard CAN/ULC-S527 "Control Units for Fire Alarm Systems.

.4 In addition, work to meet Owner's standards, and recommendations and instructions from system manufacturer.

.5 During work to the existing fire alarm system, the time and duration of interruption shall be approved by Owner and reviewed with Consultant. At any time due to emergency situations, Owner may request by-passed zone(s) to be re-instated immediately. In all areas where the renovation work requires shutdown of any part of the fire alarm protection system, provide manual fire alarm

protection (Fire Warden) by means of supervising the area as approved by Governing Authorities. At no time shall the fire alarm system or any one (1) zone be left inoperative overnight. Provide all required bypass wiring and temporary wiring as may be required to maintain all parts of the fire alarm system operative during construction and alterations.

.6 Verify with existing fire alarm system manufacturer during Bid period, the exact requirements needed to provide renovation work. If necessary, visit site with manufacturer to review existing conditions. Items of clarification or proposed revisions to Bid Documents must be reviewed with Consultant during Bid Period.

.7 Provide for the existing building fire alarm system manufacturers to perform control panel/annunciator work required for work of this phase. Provide additional modules as required for connection of additional devices and zones.

.8 Relocate devices to accommodate ceiling and wall demolitions and installation of new ceilings and walls. Maintain fire alarm protection in areas of Work to satisfaction of Owner and local fire authority. Provide required temporary supporting structures to support temporary located devices in order to maintain proper operation and fire protection. Obtain required inspections and approvals from local fire authority and Owner. Relocate devices to suit local fire authority directions.

.9 When ceiling and/or wall work has been completed, disconnect temporary devices and existing devices in temporary locations. Locate devices in permanent locations to suit renovations work as per issued drawings and Consultant’s directions. Connect, adjust, test and verify.

.10 Provide required additional devices and install existing devices as required. Circuit device’s to existing standards and in compliance with local governing codes and authorities. Unless otherwise noted in Contract Documents, do not load device circuits more than 80% capacity. Determine exact quantities of circuits based on requirements of governing codes and standards, and recommendations of system manufacturer.

.11 Install the mounting plate of detectors to ceiling mounted boxes as required. Secure the detectors to the plates.

.12 Where applicable, provide wiring in conduit and connections from smoke detector auxiliary relays to interconnected devices. Coordinate work of respective trades.

.13 Mount each duct mounted products of combustion detector on the duct in question and connect with smoke sampling tubes which extend into the duct air stream. Install a remote alarm lamp assembly for each duct mounted detector. Wall mount each lamp assembly on a standard 100 mm (4") outlet box as close as possible or practicable to the detector. Do not locate duct detectors within 1 m (3') of duct size increaser or decreaser fittings or any duct elbow. Provide wiring in conduit and extend to connect back to system control unit.

.14 Provide required audible/visual devices. Tap/set devices to existing standards. Ensure that ceiling mounted speakers are flush ceiling mounted within back box, each complete with a painted steel grille. Provide strobes in locations as shown and as required to comply with OBC.

.15 Generally, audible device locations are indicated on drawings, however, exact audible device quantities and locations shall be in accordance with results of audibility device coverage site tests. Provide suitable sound detection metering and personnel to make necessary tests. Relocate audible devices and/or provide additional audible devices as required. Refer to system testing specified later in this Section.

.16 Note: Where applicable, flush ceiling mounted audible device back boxes must be supported from the structure and not the suspended ceiling grid or tiles. Devices shall be connected to the specified taps and ensure that the sound levels are in accordance with the local authority and sound level requirements. Adjust as required and certify that levels are in compliance with the Code level requirements.

.17 In application with hold open devices on doors, ensure compliance with NFPA regarding smoke detectors tied to hold open devices such that a signal received directly from the smoke detector must cause the release of door. Where electromagnetic locks are used on doors of egress, provide required automatic release of locks upon activation of fire alarm. Provide required connections to

fire alarm system and to electromagnetic locks, and provide required contactors and/or relays for connection to control panel. Refer to drawings for other interconnection requirements.

.18 Perform required fire alarm system wiring connections to mechanical equipment to perform functions specified herein and shown and/or specified on the drawings. Provide required fire alarm system wiring between the fire alarm system and the various equipment to achieve the automatic or manual control of these units to perform functions required. Provision of fire alarm supervisory wiring connections to include but not be limited to the following (where applicable):

.1 Supervised valves and flow switches;

.2 Fan equipment starters;

.3 Door holders.

.19 Provide end of line resistors to electrically supervise all wiring. Identify and locate to existing standards.

.20 Refer to the drawing riser diagram which is diagrammatic only. Quantities of components shall be as per the floor plans and not the riser diagram.

.21 Review exact location of components with Consultant prior to roughing in.

.22 Install all wiring in conduit (except for MI). All wiring connections associated with the fire alarm system shall be performed on terminal strips in junction boxes. When pulling wires into conduit, use lubricant and ensure that wires are kept straight and are not twisted or abraded. Neatly secure exposed wires in apparatus enclosures with approved supports or ties. All wires must be clearly identified at all termination points. In addition they shall be numbered with Brady Ltd. or Electrovert Ltd. Z type markers. Colour conductors for each part of the system in accordance with the system equipment manufacturer's recommendations.

.23 Alarm signalling circuits (horns/speakers/strobes/bells) and alarm receiving circuits (pullstations, detectors) must be run in separate conduits from each other. All wiring connections shall be performed on terminal strips in junction boxes. Conduit couplings for fire alarm system wiring shall be painted red.

.24 Provide engraved Lamacoid identification nameplates for each equipment or wiring housing and secure to the front of the housing. Exact wording designations and sizes to be reviewed with Consultant prior to manufacture.

.25 Review nomenclature of the annunciator identification with Consultant and obtain necessary governing authority approvals prior to ordering.

.26 Ground and bond system as required by local governing electrical code and authority and system manufacturer.

3.4 FIELD QUALITY CONTROL

.1 Testing and Verification

.1 Provide the service of a competent, factory trained engineer or technician authorized by the manufacturer of the fire alarm equipment to technically supervise and participate during all of the adjustments and tests for the system. All testing shall be in accordance with CAN/ULC S537.

.2 Check for correct connections and test for short circuits, ground faults, continuity, and insulation.

.3 Perform audibility test of space and provide annunciation devices to suit ambient sound levels. Ensure coverage for fire alarm signalling devices on base building fire alarm system. Provide audible test of signaling devices after other systems have been commissioned to verify operation at room ambient sound level.

.4 Verify activation of all relocated devices, including flow switches, trouble, and supervisory signals from the relocated pre-action assembly.

.5 Provide the service of a competent, factory-trained engineer or technician authorized by the manufacturer of the fire alarm equipment to technically supervise and participate during all of the adjustments and tests for the system.

.6 All initial testing shall be in accordance with CAN/ULC-S537. A representative of the electrical contractor shall be present to participate and assist the manufacturer representative during the course of the verification. The electrical contractor shall make good any deficiencies discovered during the verification. All devices, new and existing, shall be verified. The electrical contractor shall provide one person for assistance with the verification.

.7 Include associated costs in Tender Price.

.8 Carry out a complete audibility test and submit report.

.9 On completion of the verification the manufacturer shall supply a certificate, together with detailed inspection record sheets showing location of each device and certifying the test results per unit, confirming that the system is installed, supervised and operational.

.10 In addition to the 3rd party testing by the manufacturer required by the ULC-S537, Contractor to perform a 3rd party verification of the fire alarm system with a separate vendor. Contractor to coordinate with the Owner for selection of the approved 3rd party vendor.

.2 Manufacturer Services

.1 The manufacturer(s) of the fire alarm shall make a complete inspection of all existing and new components installed for system(s), such as manual stations, horns, and annunciators and sprinkler and standpipe valves and smoke detectors to ensure the following:

.1 That the system is complete in accordance with Specifications.

.2 That the system is connected according to ULC requirements.

.3 That the system is connected in accordance with the Manufacturer's recommendations.

.4 That the regulations concerning the supervision of components have been adhered to (e.g. stations, detectors, supervised valves, bells), and are properly wired and supervised.

.5 That all valves are properly connected and displayed correctly on each annunciator.

.6 That any subsequent changes necessary to conform to the above will be carried out with technical advice supplied by the Manufacturer.

.7 That all thermal detectors, smoke detectors and manual pull stations have been operated and are in good working order.

.8 That all sprinkler system and standpipe system valves have been operated and are in good working order.

.9 That all annunciators correctly pin-point the origin of any fire alarm.

.10 That actual smoke concentration of sufficient density, have been applied to each smoke detector to cause the detector to be set off and that the sensitivity of each smoke detector has been set.

.11 That all existing devices are in good working order. Include for replacement of any defective/damaged devices at no extra cost to Owner.

.12 That signal audibility is acceptable in all areas. Submit audibility readings for every room.

.13 If existing audible signal devices have been discontinued by the manufacturer (for example mechanical horns), allow for replacement of all audible devices so that all devices generate similar sounds and sound patterns when activated.

.14 Also be responsible for but not be limited to following additional work to existing systems:

.1 coordinate with local fire authority inspector and Electrical Division Contractor, required testing and verification work in order to obtain certification and meet local fire code and local fire authority requirements;

.2 test system battery power supplies and demonstrate compliance with local governing building code and local fire authority requirements that battery supplies are capable of providing required 24 hours of supervisory power followed by local governing building code required time (or time directed by local fire authority) of full load power; exact method of testing to be approved by local fire authority, Consultant and Owner; confirm exact procedures with previously named parties prior to testing; include for sufficient sound measurement devices and personnel in order to successfully comply with this requirement;

.3 full review, testing, and verification of operation of building ventilation and smoke exhaust system and its integrated operation with fire alarm system and various pieces of air handling equipment;

.4 full review, testing and verification of operation of integrated systems such as elevators and their emergency sequence of operation, supervisory annunciation of sprinkler/standpipe monitor switches, pressure switches and flow switches, security alarms, BAS alarms, release of door holders and electromagnetic locks, and any other integrated components; coordinate requirements with trades responsible for integrated components and systems who will be present at time of testing and verification work;

.5 test that system audible devices provide alarm sound levels in areas as per local governing building code and local fire authority requirements; site adjust tap settings of audible devices as required to achieve required audibility levels; also test that emergency voice communication system meets or exceed intelligibility requirements of local governing building code and is approved by local fire authority;

.6 assist in Testing and Verification of electromagnetic door locks to meet requirements of authorities having jurisdiction and to obtain overall approval of installation;

.7 coordination with Electrical Divisions and local fire authority to provide requirements needed to obtain certificates of approvals from local fire authority;

.8 provide full detailed test sheets of tested components and provide certification that system work has been fully tested, that devices have passed testing and that system is in proper work order in compliance to code requirements and project documents; test documents to be additionally provided in electronic format as confirmed with Owner and Consultant.

.15 Where project work is phased and Owner requires occupancy at various stages, include for providing system testing, verification and certification after completion of each phase of work, to approval of local governing authorities. Upon Substantial Performance of the Project Work, include for providing system testing, verification and certification of the entire system work.

.16 Contact local fire authority inspector and coordinate and arrange for Fire Inspector to perform required inspections. Integrate local fire authority inspection requirements with testing and verification work to extent as per Fire Inspector’s directions. Obtain full approval and certification by local fire authority.

.17 Local fire authority inspector, Consultant and Commissioning Agent to at their discretion test system or parts of system in their review of test reports. Correct/repair any failures or deficiencies found in system, whether or not identified in test reports of manufacturer. Re-test and re-verify until successfully passed, at no extra cost to Owner.

.18 Obtain from local fire authority required certificate of approval of system and forward to Consultant.

.19 Arrange for manufacturers to supply reasonable amounts of technical assistance with respect to any changes required to conform to paragraphs above. During period of inspection, testing and verification, make Electricians available to do any required correction work and to assist during this Work. Include for trades responsible for integrated components (i.e. exhaust fans, sprinklers, elevators, gensets, etc.) and systems to be present at time of testing and verification work.

.20 On completion of verification, inspection and testing of system, obtain from manufacturer and testing company and forward to Consultant, a verification certificate together with detailed inspection reports listing each and every system component, its location in building and its acceptability. Verification certificate and inspection reports to be prepared and signed by certified testing technicians. Signed test reports to confirm that systems are installed and perform in accordance with requirements specified above. Submit minimum 2 hard copies and electronic copy.

.21 Obtain from system manufacturer and testing agency and forward to Consultant a certificate of liability insurance of minimum amount of Two Million Dollars ($2,000,000.00) each that is to be registered for this project to show satisfactory proof of manufacturer's and testing agency's liability coverage for both their product and personnel.

.22 Unless approved in writing by Owner and reviewed with Consultant, does not use open flame and/or smoke for testing.

.23 Testing technicians to be registered technicians in good standing with Canadian Fire Alarm Association (CFAA) or be a Certified Fire Alarm Electrician (CFAE) with Electrical Contractors Association of Ontario (ECAO) as deemed acceptable to Ontario Fire Marshall.

3.5 DEMONSTRATION

.1 At the final inspection a factory trained representative of the manufacturer of the major equipment shall demonstrate that the systems function properly in every respect.

3.6 TRAINING

.1 Provide instruction as required to the building personnel and fire and safety personnel. "Hands-on" demonstrations of the operation of the system shall be provided.

END OF SECTION

PART 1 - GENERAL

1.1 SECTION INCLUDES

.1 The specifications for the access control system are a description of the various components with the minimum operational sequence requirements. System shall comply with all applicable codes.

.2 When all systems are completely installed and ready to be used, the successful supplier shall thoroughly instruct those appointed by the Owners in the complete operation of all systems provided by him for a minimum time of 2 hours (Two 1 hour sessions at times as directed by Owner to suit staff's requirements) unless in the opinion of the Consultant a longer instruction period is necessary.

PART 2 - PRODUCTS

2.1 MANUFACTURERS

.1 The systems shall be as manufactured by:

.1 JCI/Tyco (no other manufacturers will be entertained)

2.2 EXISTING ACCESS CONTROL SYSTEM

.1 The existing JCI/Tyco P-2000 Security System presently serves the existing hospital and is to be retained to accommodate the access control devices in the renovated areas. Include for and engage Hospital's existing system vendor JCI/Tyco (contact Ralph Staffieri, Email: raffaele.staffiere@jci.com, cell: 416-629-3842) to provide system work and products.

.2 Access Control scope of work will include for provision of:

.1 co-ordination of system work to clearly identify responsibilities of system vendor and Electrical Contractor;

.2 all required conduits and boxes, power feeders, to suit system requirements and as per requirements of Section 26 05 33.13 and as per system manufacturer's requirements;

.3 installing all access control system components, wiring, wiring accessories, identification and labelling of each wiring run;

.4 all required access control system programming;

.5 all access control system testing, inspection and verification work upon completion;

.6 testing and verification reports signed by manufacturer's authorized representative and by Electrical Contractor;

.7 access control vendor's provision of technical assistance and supervision of Electrical Contractor with regards to conduit, wiring and component installation requirements.

.8 Additional access control devices and other products to be 100% compatible to existing system.

.9 All required modifications to existing access controller(s) – (CK721);

.10 All required additional access controller(s);

.11 All required software programming;

.12 wiring as per system manufacturer's requirements, run in conduit and provision of required ancillary devices;

.3 Card readers:

.1 HID iCLASS Readers Model no. #RP40, for all devices provide tamperproof screws and anti-pick sealant.

.2 Type: dual technology and iclass proximity.

.3 Quantity of card readers required: see plans.

.4 Dual technology and iclass proximity.

.5 Fitted with LED indicator light.

.6 Reading distance 50 - 200 mm.

.7 Compatible with Owner's existing access cards.

.4 System Accessories:

.1 Door strike: surface mounted, latch UL approved complete with mounting hardware.

.2 Door Contact: recessed mounted, complete with mounting hardware.

.3 Request to exit motion sensor device:

.1 Heavy duty assembly.

.2 Size: square, 50 x 50 mm.

.3 Sturdy and attractive finishing plate with security screws.

.4 Power supplies:

.1 Continuous low-voltage operation output.

.2 Equipped with secondary protection for each output.

.3 Individual outputs for connection of devices.

.4 AC power failure output.

.5 DC power failure output and low battery output.

.6 Fitted with tamper contact.

.7 Wall mounted cabinet with locked door complete with 2 keys.

.5 Voltage: requires Belden #8444.

.6 Access Control Systems: to UL-1023.

.5 The specifications for this system are a description of the various components with the minimum requirements of the operations sequence, facilities and features required.

.6 Fully complement and function and match door manufacturer's controls and hardware.

.7 Fully function with OEM supplied door controls and hardware to activate system in routine and emergency conditions.

.8 Fully function within supplied electrical supervision circuits as specified.

.9 Wiring shall be as follows:

.1 Card Reader: Beldon #9554

.2 Electric Strike or Maglock: Beldon # 8471

.3 All other devices, Door contact, Sonalert, exit button, auto exit power, auto exit contact, key switches, door operator, keypad power, keypad contact and fire alarm release are Beldon #8444.

.4 All wiring shall be installed with minimum ¾" (19mm) conduit unless otherwise noted.

PART 3 - EXECUTION

3.1 INSTALLATION

.1 Provide complete access control system as shown on Drawings and as specified.

.2 Install Access Control System units and components in accordance with CAN/ULC-S310 UL 1641.

.3 Conduits and back boxes for devices in walls and doors will be provided by Electrical Trade as noted in Section 26 05 33.13 and as per system manufacturer's requirements. Provide all control boxes/equipment and conduit work to tie in to rough-ins.

.4 Install wiring in conduit in accordance with the recommendations of the manufacturer.

.5 Provide tamperproof attachments for each activation unit cover plate to back box.

.6 For all access control surface mounted devices provide tamperproof screws and anti-pick sealant.

.7 Enclose in conduit or flexible protective armor external cables for associated junction box to remaining system locations, from junction box to above ceiling mounted cable ducts or master conduit routes.

.8 Securely fasten all components to wall, ceiling, or other substrate or structure.

.9 Provide minimum ¾" (19mm) conduit from each device to the ceiling and provide 4"x4" deep junction boxes as specified in ceiling space for each door.

.10 Mount card reader at 36" above floor to center of device, unless noted otherwise, using single deep back box and plaster ring. Coordinate exact location with owner prior to rough-in.

.11 Protect installed products and components from damage during construction.

.12 Repair damage to adjacent materials caused by access controls and equipment installation.

.13 Field Quality Control

.1 Manufacturer Services:

.1 Manufacturer of products, supplied under this Section, to review Work involved in the handling, installation/application, protection and cleaning, of its products and submit written reports, in acceptable format, to verify compliance of Work with Contract.

.2 Manufacturer's Field Services:

.1 Obtain written reports from manufacturer verifying compliance of Work, in handling, installing, applying, protecting and cleaning of product.

.2 Submit manufacturer's field services consisting of product use recommendations and periodic site visits for inspection of product installation in accordance with manufacturer's instructions.

.3 Ensure manufacturer's representative is present before and during critical periods of installation and testing.

END OF SECTION

Procedures for Construction, Renovation & Physical Plant Projects

SickKids®

V. 2024.05

Table of Contents

Hospital Procedures for Contractors 4

1. *General Information 4*
2. *Contractor Orientation Presentation 6*
3. *Health & Safety 9*
4. *Standard Procedures / Policies 13*
5. *Activity Permits for Construction, Renovation & Physical Plant Projects work on site at SickKids 16*
6. *Communicable Illnesses 16*
7. *Information Management Technology (IMT) 16*
8. *Fire Procedures 17*
9. *Fire Prevention 20*
10. *Security Badge 21*
11. *Use of Loading Dock and Elevators / Delivery of Materials 23*
12. *Storage of Materials 26*
13. *Waste Management 26*
14. *System By-Pass, Shutdowns or Access 28*
15. *Site Containment 30*
16. *Disruptive Work 31*
17. *Hospital Emergency Codes 32*
18. *Separation of Projects 37*
19. *Separation Plans 39*
20. *Other 39*

The SickKids **Procedures for Construction, Renovation & Physical Plant Projects** manual was prepared and completed with committee members from the following departments:

Department Name

Facilities Development

Infrastructure Renewal

Fire Marshal

Infection Prevention & Control (IPAC)

Occupational Health & Safety (OHSS)

Plant Operations

Protection Services

Research Infrastructure and Space Management

PGCRL Facility Operations

Information Services

Medical Engineering

Housekeeping

Creative Services Studio

Legal Services

Hospital Procedures for Contractors

1. General Information

1.1. The following requirements are provided to the General Contractor/Constructor who has been contracted to complete construction, renovation or physical plant projects at any SickKids owned sites. SickKids owned sites are Annex (consisting of Black Wing, Hill Wing, and Burton Wing), Slaight Atrium, Patient Support Centre (PSC), and the Peter Gilgan Centre for Research and Learning (PGCRL). The General Contractor/Constructor is responsible for communicating all of the following points and items to all contractors, sub-contractors and employees working on projects at SickKids:

Note: For any SickKids leased sites, General Contractor/Constructor shall coordinate with SickKids Project Lead to comply with Landlord's construction manual / procedures.

- The General Contractor/Constructor is required to comply with all applicable Federal, Provincial and Municipal Acts and Regulations including but not limited to: Occupational Health & Safety Act, Workplace Safety and Insurance Act and the Environmental Protection Act.

- The General Contractor/Constructor shall ensure that Contractors, sub-contractors and employees have attended the Construction Start-up Meeting, completed SickKids Contractor Orientation Presentation, and are aware of the SickKids Procedures for Construction, Renovation & Physical Plant Projects prior to working at SickKids.

- The Site Supervisor for every construction/renovation project at SickKids shall read and understand the following: Code of Conduct Summary, and Privacy and Information Security Summary (informed at the Contractor Orientation and found within the Procedure for Construction, Renovation & Physical Plant Projects document, Appendix M1). The Site Supervisor shall, on a regular basis, relay this information to their workers/sub-trades on site during their regular safety "Toolbox Talk" meetings.
  By signing the Attestation, the Site Supervisor acknowledges that they along with all individuals under their contract will comply with the expectations/requirements outlined in the Code of Conduct Summary, and Privacy and Information Security Summary. The Attestation will be provided to the Site Supervisor by the SickKids Project

Manager/Project Coordinator at the onset of a Project. The Site Supervisor shall provide the SickKids Project Manager/Project Coordinator with a signed copy of the Attestation before any construction activity commences. Attestation will be kept in the SickKids project file.

- The General Contractor/Constructor on site shall be responsible for the health and safety of their employees and sub-contractors and are required to utilize their own expertise to enforce any other requisite rules and procedures to further guard the safety of all SickKids employees, patients, staff, visitors, and volunteers.

- Refer to **Appendix A** Contractor Safety for more information.

1.2. SickKids Construction Start-up Meeting for General Contractor/Constructor is designed to:

- Ensure the safety of workers, and SickKids patients, staff, visitors, and volunteers.
- Ensure security of the hospital is not compromised.

- Ensure work is completed in an environmentally sensitive manner.

- Ensure operations in the hospital are maintained and not disrupted by any unplanned event.

1.3. Additional instruction session may be required for specialized areas such as, but not limited to; critical care areas, diagnostic imaging departments, operating rooms, wet labs, lab animal services department, dry labs, and data centres.

1.4. Construction Start-up Meeting will be scheduled by the SickKids Project Manager/Coordinator for all General Contractor/Constructor, and will be held prior to any work taking place, which requires the attendance of the project supervisors and foremen of the major subcontractors.

1.5. All General Contractor/Constructor shall comply with SickKids Policy on *Infection Control Related to Building Maintenance, Repair, Construction, Renovation and Physical Plant Projects* (refer to **Appendix B** for policy).

2. Contractor Orientation Presentation

2.1. Prior to beginning work on a construction project, General Contractor/Constructor and all sub-trades are required to participate in a SickKids contractor orientation presentation, which will be conducted by SickKids. Content will include; Occupational Health & Safety, Fire Prevention, Protection Services, Emergency Procedures, Infection Prevention and Control, Code of Conduct, Privacy and Information Security.
Refer to **Appendix M1** for Construction Contractor Orientation package.

Orientation:

- All individuals employed or sub-contracted by a General Contractor/Constructor must complete the SickKid's Contractor Orientation, regardless of the duration of their stay. The orientation must be completed prior to or within 7 days of being on-site for work on a project. Workers spending more than a total of 5 days on-site must participate in the in-person orientation session, while those spending less than 5 days on-site can opt for the online orientation. The in-person sessions are held monthly and can be scheduled more frequently based on demand.
- The Contractor is responsible for ensuring that individuals on-site for less than 5 days in total complete the online orientation via a link provided by the SickKids Project Manager. This E-Learning Orientation, hosted on Academy Online, requires registration. Upon clicking "register" (located at the top-right), users will be prompted to input their Name, Email, and create a Password. After registration, users can log in with their email and password to complete the orientation. Upon successful completion of the course, a certificate will be automatically issued.
- Contractor Orientation Presentation is valid for 1 year. Upon expiry, individuals must reattend the in-person orientation or recomplete the e-learning modules.
- An attendance list and records of training will be kept by OHSS
- Upon completion of the Contractor Orientation Presentation, qualifying individuals will be issued a numbered hardhat sticker. Refer to Appendix M2 for Construction Orientation Sticker Policy.
- Contractor Orientation Presentation will last approximately 1.5 hours.

2.2. Mandatory Health and Safety Postings for Construction Projects

Contractors are required by law to have certain information posted or available at a project site.
These postings are summarized by the Infrastructure Health and Safety Association:
https://www.ihsa.ca/pdfs/safety_talks/logbook/Post_on_Site_Checklist.pdf

It is the responsibility of the constructor to manage how this information is posted and/or made available to their workers and subcontractors.

At a minimum, the following are required, and will be reviewed as part of site audits:

- Occupational Health and Safety Act and Regulations for Construction Projects (the "Green Book")
- Constructor company health and safety policy and program
- Constructor company workplace violence and harassment policy
- Ministry of Labour (MOL) inspector's orders and reports
- Material Safety Data Sheets (available)
- Emergency response plan
- Fall arrest rescue procedures (available)
- In Case of Injury poster issued by the Workplace Safety and Insurance Board
- Health & Safety at Work: Prevention Starts Here poster issued by the MOL
- MOL Notice of Project (Form 0175) if the project is valued at more than $50,000 or falls under one of the other conditions in Section 6 of the Construction Regulation (Ontario Reg. 213/91)
- MOL Registration of Constructors and Employers Engaged in Construction (Form 1000) for every employer on the jobsite (available)
- Name of constructor and head office info
- Address and phone number of nearest MOL office
- DANGER signs in hazardous areas
- Location of toilet facilities
- Valid certificate of first aider on duty
- Inspection card for first-aid box
- Employer records of first aid treatment given (available)
- Name, trade, and employer of (as applicable):
- health and safety representative
- each member of the Joint Health and Safety Committee.
- Emergency phone numbers
- Location of nearest hospital (map)

2.3. Health & Safety Site Audits

Throughout the duration of the project, SickKids will be performing periodic health and safety audits of the work sites and work being performed. This will be coordinated with the General Contractor/Constructor and notification will be provided by SickKids in advance.

The intent of these audits is to:

- Review the compliance by the General Contractor/Constructor in regards to health and safety contract specifications
- Identify potential or actual health and safety concerns that may pose a direct or indirect risk to SickKids patients, visitors or staff
- Assess the overall health and safety performance of the General Contractor/Constructor on the project

This audit is NOT intended to:

- replace any legislative workplace inspections that General Contractors/Constructors are required to do
- replace any legislative constructor duties placed under the occupational health and safety act and associated regulations
- replace any contractual health and safety responsibilities placed upon the constructor
- direct the health and safety or work of any General Contractor/Constructor or Subcontractors
- designate or cause SickKids to become constructor for the project

In addition, this audit is informative in nature and SickKids will not be giving specific direction to the General Contractor/Constructor on corrective measures of any health and safety concerns noted.

At the completion of each audit, SickKids will supply the General Contractor/Constructor with a written report. It will be the responsibility of the General Contractor/Constructor to review the report and address the concerns noted in a reasonable time frame and inform SickKids what corrective measures were taken to comply with project, contractual and legislative requirements.

SickKids reserves the right to change the format, content, and frequencies of the audit at any time throughout the project.

2.4. IPAC Site Audits

During the duration of the project, SickKids will be performing periodic infection prevention and control audits in and around work sites.

The intent of these audits is to review the compliance by the General Contractor/Constructor with infection prevention and control requirements found in project specifications, contracts, and the most recent version of the CSA Z317.13 "*Infection control during construction, renovation, and maintenance of health care facilities*".

This audit is intended to be informative in nature and SickKids will not be giving specific direction to the General Contractor/Constructor on corrective measures of any infection control concerns noted.

At the completion of each audit, SickKids will supply the General Contractor/Constructor with a written report. It will be the responsibility of the General Contractor/Constructor to address the concerns noted within the timeframes specified in the most recent version of the CSA Z317.13 (if unspecified in the standard, within a reasonable time frame) and inform SickKids what corrective measures were taken to bring the work into compliance with the CSA standard.

3. Health & Safety

3.1. All General Contractor/Constructor, working on projects at SickKids must comply with the Occupational Health & Safety Act and regulations including:

- Regulations for Construction Projects.
- Regulations for Health Care and Residential Facilities (where applicable).
- Regulations for Industrial Establishments (where applicable).
- Any other relevant Acts and Regulations.

3.2. Non-Compliance with the applicable regulations, SickKids procedures and/or General Contractor's/Constructor's Health and Safety Rules may result in appropriate and escalating enforcement action (including removal from the project).

3.3. All disciplinary actions will be documented by the SickKids Project Manager/Coordinator and placed in the General Contractor's/Constructor's permanent project file for future evaluation by SickKids.

3.4. Prior to starting work at SickKids, the General Contractor/Constructor shall forward to the SickKids Project Manager/Coordinator:

- Performance, Labour and Material Bonding documents (if applicable)
- Ontario Ministry of Labour - Registration of Constructor (Form 1000)
- Ontario Ministry of Labour - Notice of Project, The Occupational Health and Safety Act
- Certificate of Liability Insurance
- WSIB Clearance Certificate
- General Contractor's/Constructor's Health & Safety Program

- Contractors/Constructors must provide all applicable training certifications prior to start of project.

  - First Aid and CPR Certificate
  - Certificate of Fundamentals of Supervising and Due Diligence
  - Certificate of Supervisor Health and Safety Awareness in 5 Steps
  - Certificate of AODA Accessible Customer Service Regulation
  - Certificate of IASR Employment Standard – AODA
  - Certificate of IASR General Requirements – AODA
  - Certificate of IASR Information and Communication Standard – AODA
  - Canadian Centre for Occupational Health and Safety – Violence in the Workplace: Recognize the Risk and Take Action
  - Canadian Centre for Occupational Health and Safety – Asbestos in the Workplace
  - Canadian Centre for Occupational Health and Safety – Manual Materials Handling
  - Canadian Centre for Occupational Health and Safety – WHMIS 2015 for Workers
  - Confined Spaces Certificate
  - Ontario Chief Prevention Officer approved, Working at Heights Certificate
  - Lockout Tagout in the Workplace

  And any required training certificates applicable to the specific project.

- General Contractor's / Constructor Site Supervisors' / Foreman's': Authorized Certificate of Completion from CSA Group for the following programs: CSA Z317.13

  - Fundamentals of Infection Control During Construction, Renovation and Maintenance of Health Care Facilities
  - Infection Control During Construction, Renovation and Maintenance of Health Care Facilities

- The General Contractor/Constructor's on-site supervisor must have the CSA certificates (as listed above) present at all times during construction.

- A site safety plan (see template in section 3.8) – this safety plan must be reviewed and approved by SickKids prior to issuance of an Activity Permit (Refer to section 5.1 for details of Activity Permit). The General Contractor/Constructor is to amend as required by SickKids.

- A separation plan (see section 16) – this plan must be reviewed and approved by SickKids prior to issuance of an activity permit. The General Contractor/Constructor is to amend as required by SickKids.

3.5. Keep on site, copies of the Material Safety Data Sheets (MSDS) for all WHMIS-controlled and hazardous products brought on site ready for review when requested. MSDS cannot be older than 3 years.

3.6. Hazardous and controlled products must be stored in accordance with good practices and as may be required under the Ontario Fire Code.

3.7. Hazardous building materials that contractors may encounter at SickKids include, but not limited to, asbestos, mercury, lead and silica.

- All General Contractor/Constructor will be provided with a designated substance report or notification letter pertaining to their specific project scope of work.

- In case of accidental discovery of suspicious material, General Contractor/Constructor shall notify the SickKids Project Manager/Coordinator. SickKids will determine how the suspected hazardous material will be appropriately identified, evaluated and controlled.

- If a General Contractor/Constructor unintentionally disturbs any suspected hazardous material, work will be stopped immediately and the site supervisor and SickKids Project Manager/Coordinator shall be notified.

- Refer to **Appendix C** Contractors – Asbestos Operations for more information.

3.8. Construction Site Specific Safety Plan Template

Purpose: The intent of this template is to identify the MINIMUM requirements of a Construction Site Specific Safety Plan for any constructor or designated contractor awarded work at any SickKids location. Submitters are required to elaborate and expand upon these requirements. Note that you may also be required to develop a separation and hoarding plan.

The Construction Site Specific Safety Plan shall be provided to the SickKids Project Manager/Coordinator prior to the start of work. Failure to submit the SSSP will result in a delay to the issuance of the activity permit, which will result in a delay of the construction start date.

Please allow up to 5 business days for review. Incomplete plans will not be reviewed. SickKids reserves the right to request additional information on a project by project basis.

DO NOT SUBMIT your company's safety manual.

Construction Site Specific Safety Plan Template (minimum requirements):

a. **Scope of Work:** narrative of the project scope associated with your contract including schedule and major project milestones.

b. **Designated On-Site Supervisor and Safety Representatives:** include contact information

c. **Safety Orientation Program:** process to orient workers and subcontractors to your safety rules and expectations including ongoing toolbox safety talks.

d. **Hazards Communication Program & Incident Reporting/Inspection**

e. **Hazard Assessment:** identification of hazards associated with defined project tasks. Please elaborate on highly hazardous tasks associated with the work (crane picks, scaffolding, working at heights, confined spaces, utility shut-downs, lockout/tagout, hazardous material abatement, hot work, trenching, etc.).

f. **Site Specific Emergency Response Plan & 24-hour emergency points of contact**

g. **Site Logistics Plan:** plan shall address staff/patient/public protection (including infection control), traffic plan, equipment and lay-down areas, site security, tire washing, emergency evacuation muster points, etc.

h. **PPE requirements**

i. **Accident Reporting and Investigation Procedures**

j. **Safety Audit/Inspection Procedures**

k. **Project Clean-Up Plan:** detail how your company plans on keeping the workplace clean and free of potential hazards.

3.9. General Contractors/Constructors shall provide the Project Manager/Project Coordinator via email with the number of workers per trade, that are on site, on a daily basis at the start of each day for SickKids' record-keeping.

3.10. General Contractors/Constructors shall provide the Project Manager/Project Coordinator with a copy of the Safety Talks/Toolbox Talks meeting minutes and attendance sheet for SickKids' record-keeping.

4. Standard Procedures / Policies

4.1. Sign in and out procedure at PGCRL:

PGCRL SickKids Project Manager/Coordinator shall notify Protection Services advising of the General Contractor's/Constructor's work area and schedule.

4.2. Once the General Contractor's/Constructor's site safety and separation plans have been reviewed and approved by SickKids, SickKids will issue an activity permit, which indicates the work activity has been approved by SickKids internal stakeholders and the work may proceed.

4.3. All construction areas must have the following material posted:

- SickKids authorized Activity Permit.

- Building permits, if applicable.
- Safety Signage
- Construction Notices and Posters including:
  - Name and number of the SickKids Project Manager/Coordinator.
  - Name and number of the Project Site Supervisor/Company.
- Wayfinding Signage, if required

Please refer to **Appendix G**, Hoarding Classification Matrix for detail.

4.4. General Contractor/Constructor shall follow the dress code at the hospital. The dress code considers the following, but not limited to, to be inappropriate wear at all times:

- Jeans or pants with ripped or torn areas.
- Sweatpants.
- Any garment containing political, explicit, sexually suggestive or otherwise offensive messages or logos.
- Any footwear that may present a danger to the General Contractor/Constructor's health or safety.

4.5. SickKids has a zero-tolerance policy regarding violence and harassment. General Contractor/Constructor shall not use offensive language or offensive behavior including threats, harassment, and horseplay. General Contractor/Constructor shall perform their roles in a manner consistent with SickKids' values. Failure to comply may result in immediate termination of work on SickKids premises.

4.6. Construction site must be secured at all times.

4.7. General Contractor/Constructor intending to use public areas during their break (i.e.: cafeteria, food court…) must be clean and appropriately dressed. General Contractor/Constructor are not to use designated staff areas for their coffee or lunch break outside of the construction area.

4.8. General Contractor/Constructor will be responsible for cleaning any public washrooms that are designated for General contractor/Constructor use.

4.9. Standard after-hours is Monday to Friday 5p.m. to 6a.m., anytime on statutory holidays and weekends. After-hours may vary in different areas, General Contractor/Constructor to verify with SickKids Project Manager/Coordinator prior to work.

PGCRL Standard after-hours is Monday to Friday 4p.m. to 6a.m., anytime on statutory holidays and weekends. After-hours may vary in different areas, General Contractor/Constructor to verify with SickKids Project Manager/Coordinator prior to work. Constant supervision by Protection Services is required in the following areas: Data Centre: 24/7 supervision LAS: Supervision during working hours between 7a.m. to 3p.m. No work is allowed outside these hours. PSC Standard after-hours is Monday to Friday 6p.m. to 8a.m, anytime on statutory holidays and weekends.

4.10. In the event of after-hours and/or weekend work, General Contractor/Constructor must notify SickKids Project Manager/Coordinator at least 48 hours in advance by email. The following information must be included in the communications:

- Project Name.
- SickKids Project Manager/Coordinator.
- General Contractor's/Constructor's Name & Contact Information.
- Site Location.
- Description of Work.
- Date/Time of proposed work.

SickKids Project Manager/Coordinator will issue After-Hours Notification to the organization.

4.11. For enhanced security measures, all Contractor/Constructor entering the building through the Elizabeth Street doors after 8p.m. weekdays and/or weekends shall check in with Protection Services at Main Information Desk and badge in to ensure that their badges are active and in use by the authorized user.

5. Activity Permits for Construction, Renovation & Physical Plant Projects work on site at SickKids

5.1. An activity permit is a work authorization form that is to be completed and approved by specified SickKids stakeholders prior to work being undertaken by any external constructor, contractors and/or subcontractors on construction projects in any owned or leased SickKids locations.

5.2. All General Contractors/Constructors shall comply with the Activity Permit Policy. Refer to Appendix N for full details.

6. Communicable Illnesses

6.1. Any person who has symptoms of communicable illnesses (e.g.: fever, cough, runny nose, vomiting, diarrhea, etc.) must stay away from the hospital until they are free from symptoms for 48 hours. Any General Contractor/Constructor found on site with signs of illness will be advised to leave the site.

6.2. All General Contractors/Constructors shall comply with section 6.1.2 of SickKids Staff Immunization & Surveillance Policy (refer to **Appendix D1** for policy). Proof of immunization & surveillance to be available from the General Contractor/Constructor at all times and provided upon request by SickKids.

6.3. All General Contractors/Constructors shall refer to **Appendix D2** for COVID-19 Vaccination policy.

7. Information Management Technology (IMT)

7.1. Prior to construction start up, SickKids will have all equipment ((i.e., computer, phones, printers, Omicells, etc..) disconnected and removed from the construction site.

7.2. Contractor/Constructor to inform SickKids Project Manager/Coordinator prior to any demolition of network cabling affecting the network switch. An IMT representative must be involved in all cable disconnection.

7.3. For any network work, advance notice is required, as IMT may need to engage Telus as well as implement a change that need to be managed through SickKids IMT Change Management process.

8. Fire Procedures

At SickKids (main campus and PGCRL), there is a two-stage fire alarm system. Please ensure all workers are familiar with the following procedures.

a. First Stage – Alert Tones Sound – 20 beats per minute - followed by voice communication.

b. Second Stage – Alarm Tones Sound – 120 beats per minute- followed by voice communication (Evacuation).

8.1. Important Information

- Building Permits: Building Permits must be posted at all times and produced upon request by the Fire Marshal/Designate or SickKids Project Manager/Coordinator.

- Welding/Hot Work Permits: Must be obtained from Facilities Operations before any hot work is completed.

- An electronic Hot Work Permit must be obtained from SickKids Project Manager or Project Coordinator.
  Please refer to Appendix E for details regarding hot work permit submission timing, individuals to be copied, and red tag posting details.

- Red Tags can be obtained electronically from the Fire Safety Coordinator once approved. Refer to Appendix E for further information.

- Once the Fire Safety Coordinator has approved hot work, the contractor shall print a copy of the hot work permit and post at the jobsite. Red tags shall be printed and posted at the affected system.

  General Contractors/Constructors is responsible to contact Protection Services before starting work and after completing work ONLY when there is hot work or red tag work.

  User must ensure they follow the written policy (refer to **Appendix E** for *SickKids Fire Bypass – Hot Work & Fire Protection Impairment Information, Procedures & Responsibilities*). Failure to comply may result in the termination of the permit and/or the request to leave the premises. Hot Work includes, but not limited to, cutting, welding, soldering and brazing.

- Supervisor Responsibilities: The Site Supervisor is responsible for ensuring that all workers on site are familiar with the fire and life safety features of the building:

  a. Location of 2 exits from floor area.

  b. Location of Pull Stations.

  c. Location of Fire Hose Cabinets.

  d. Location of Portable Fire Extinguishers.

  e. Show proof of attendance of fire safety and extinguisher training.

- Fire Watch: If a fire watch is required it must be in accordance with SickKids guidelines.

- Bypass of Fire Alarm and Suppression Systems: Before any work commences that may compromise the integrity of the fire alarm and/or suppression systems, the system must first be bypassed by Building Operators. Failure to do so may result in a Code Red activation of the Fire Alarm System. Subsequent fines as charged by the Toronto Fire Service will be back charged to the General Contractor/Constructor plus 15% administration fee.

- Bypass of fire alarm system shall be submitted the week in advance of the work by Wednesday at 3pm. All late requests will be declined and not processed. **Refer to Section 14.1 for details.**

- Request for bypass of fire alarm system must be obtained from SickKids Project Manager/Coordinator.
  Please refer to Appendix E for details regarding submissions and bypass procedures.

- Fire Marshal Contact: For all non-emergency fire-related issues the SickKids' Fire Marshal may be contacted at Ext: 205599 or Pager 416-713-0455.

- Emergency Dial: To report a fire emergency inside the hospital you must dial 5555 for an Emergency Switchboard Operator.

- Designated Meeting Area outside the Building: Supervisor is responsible for ensuring that all staff is aware of where the designated

central meeting place outside for accountability purposes – in the event of an evacuation.

8.2. If You Discover Smoke or Fire

If you notice smoke or fire, follow R.E.A.C.T procedures as appropriate, stay calm, and be sure to do the following:

R Remove Occupants only if it is “Safe” to do so.
E Enclose Area.
A Activate Fire Alarm using closest pull station.
C Call 5555.
T Try to Extinguish the Fire.

8.3. Preparing to Exit

- At the first stage fire alarm will sound, listen to the voice communication for identification of building, floor, zone and area of activation.

- At all times listen for the second stage fire alarm, as well as any fire announcements on the speakers, as this may indicate that the fire threat is imminent, in which case, proceed directly to the Evacuation Process.

- If you smell smoke or detect fire, proceed immediately with the Evacuation Process.

8.4. Evacuation Process

Evacuation will occur when:

- Threat is imminent (fire, smoke, fumes, gas, etc.).

- The fire alarm sound beeps are increased: the tone and speed of the beeps change.

- The speaker announcement instructs evacuation.

8.5. Precautions for Leaving an Area

- DO NOT USE ELEVATORS, exit through the nearest stairwell.

- Close doors behind you, but ensure that they are unlocked, in order to provide access for the fire department.
- Check any door before opening (feel door and doorknob for heat). Open the door slowly, and if you feel air pressure or hot draft close the door.

8.6. If You Cannot Leave Your Area

- Stay calm.
- Dial 5555 and indicate your location and the number of people with you. Also indicate if anyone is hurt.
- Close doors.
- Only fight the fire with the appropriate portable fire extinguisher if it is safe to do so.

9. Fire Prevention

9.1. Housekeeping

- No accumulation of combustible materials on the construction site, garbage is to be removed daily.
- Do not block walkways, corridors, doors, exits, extinguishers, fire hose cabinets or manual pull stations with storage or combustible waste materials or building materials.
- Do not block or obstruct sprinkler heads.

9.2. Flammable & Combustible Liquids

- No propane cylinders permitted on / inside any sites.
- Welding cylinders must be secured when stored or in use.
- Cylinders must have current testing and inspection tag attached to cylinder.
- Flammable or Combustible liquids shall be stored in approved ULC listed containers and cabinets only.

- Flammable or combustible materials shall be kept to a daily minimum as per the Ontario Fire Code.

9.3. Extinguishers

- General Contractor/Constructor are to provide their own appropriate type of fire extinguisher and in no manner use designated SickKids fire extinguishers.

- Extinguishers shall have current inspection tag attached and have been H/tested and maintained as per NFPA 10.

9.4. Heat Producing Equipment

- Turn off power and heat producing equipment when finished for the day and when not in use.

- Follow all guidelines for Welding and hot work activities, ***hot work permit*** is required for all cutting and welding work.

9.5. Compressed Gas Cylinders

- Storage of compressed gas cylinders shall be in conformance with the Ontario Fire Code and NFPA 101.

- Ensure that compressed gas cylinders are properly stored and secured.

- Compressed gas cylinders must be individually restrained and stored with the valve cap in place.

10. Security Badge

10.1. General Contractor/Constructor are to complete the appropriate Badge Appointment Form (refer to **Appendix O** Standard SickKids Form) for the main campus, PSC and PGCRL, and forward to the SickKids Project Manager/Coordinator for full authorization.

For access to the PGCRL building, General Contractor/Constructor must submit a PGCRL Badge Access Form (refer to **Appendix O** Standard SickKids Form).

SickKids Project Manager/Coordinator will email Badge Appointment Form and/or PGCRL Badge Access Form as required.

10.2. The General Contractor/Constructor will be responsible for all SickKids picture ID badges issued to their workers and sub trades for their project.

10.3. There is a Badging Office located in the Hospital (555 University Ave), room M750. A piece of government issued photo I.D. is required. Hours of operation are Monday to Friday at 7:15 AM to 3:15 PM (closed between 11:30 AM to 1:00 PM). Walk-ins only. No appointment needed.

PSC There is a Badging Office located in the PSC (175 Elizabeth St), behind the main desk. A piece of government issued photo I.D. is required. Hours of operation are Monday to Friday at 8:00 AM to 4:00 PM. (Closed between 12:30 PM to 1:30 PM. Walk-ins only. No appointment needed.

10.4. A charge of $25 will be allocated for all new picture ID badges. For replacement of lost picture ID badges a charge of $25 will be allocated for the first lost badge and $50 for each subsequent lost badge. If you currently have a picture ID badge there will be no charge for renewals. These charges are not refundable or billable to the project.

10.5. SickKids picture ID badges must be worn by General Contractor/Constructor at all times when on any SickKids sites.

10.6. Picture ID badges will be programmed for access to and from the designated construction area.

10.7. Individual General Contractor/Constructor on site for over 5 (five) days are required to have a picture ID badge.

10.8. Individual General Contractor/Constructor on site for 5 (five) days or less, shall be with someone with a SickKids ID badge at all times.

PGCRL Temporary ID Badges can be signed out at the Security Desk in the main lobby. A photo ID must be left at the Security Desk as a deposit.

10.9. All SickKids ID badges must be returned upon completion of the project. Returned ID badges will be held on file for ninety (90) days and reissued to the General Contractor/Constructor with no charge in the event that they return to SickKids on another project within the 90 day period. (No refund for returned ID badges.)

10.10. ID badges are not transferable. If a General Contractor/Constructor is found to possess an ID badge that is not assigned to that person, the ID badge will be confiscated and reported to the appropriate SickKids Project Manager/Coordinator.
In such incidents, SickKids retains the right to have the individual permanently removed from the SickKids site.

11. Use of Loading Dock and Elevators / Delivery of Materials

In the support of single or multiple renovation or construction projects, the following procedural guidelines for the use of existing facilities are to be followed and adhered to by all General Contractor/Constructor when working at SickKids.

11.1. All General Contractors/Constructors are to conform to all Ministry of Labour requirements, and where applicable, to all other jurisdictional authorities as may be required regarding the transportation.

11.2. Elevators can only be requested for the purpose of delivery or removal of materials, equipment or large tools to and from the construction site during after-hours.

The booking of elevators for after-hours work shall be requested by the General Contract/Constructor through the SickKids Protection Services via email (protectionservices.managementteam@sickkids.ca)
SickKids Project Manager/Coordinator shall be copied on these requests.

PGCRL
The Service Elevator is the only designated elevator for Contractor's/Constructor's use. It cannot be put on service mode at any time.

Materials and large deliveries must be transported through the Service Elevators between Monday to Friday 11p.m. to 8a.m., anytime on statutory holidays and weekends.

Booking of the Service Elevator must be arranged two (2) weeks in advance with the SickKids Project Manager/Coordinator and Protection Services, as per emails provided below:
CRL – Visitor Requests crl.visitorrequests@sickkids.ca
CRL – Protection Services Management Team crl.psmt@sickkids.ca

The Service Elevator shall not be put into Service Mode for any deliveries.

11.3. Delivery and transportation of material, equipment and/or large tools through SickKids sites are to be performed during after-hours Monday to Friday 5p.m. to 6a.m., anytime on statutory holidays and weekends in non in-patient areas unless otherwise approved by the SickKids Project Manager/Coordinator.

PGCRL
Delivery and transportation of material, equipment and/or large tools through the PGCRL are to be scheduled and coordinated with the SickKids Project Manager/Coordinator in collaboration with the representative from Research Infrastructure & Space Management.

11.4. The designated construction service elevator can only be used by one General Contractor/Constructor at a time for the purpose of delivery or removal of materials, equipment or large tools to and from the construction site.

11.5. Only one General Contractor/Constructor can be in the designated receiving or loading area at a time. Loading Dock is to be used for the following purposes only:

a. Delivering garbage or rubble into the General Contractor/Constructor dumpster located in the receiving area.

b. Picking up deliveries from suppliers.

c. Having goods, materials or equipment picked up or sent to the loading dock.

11.6. Loading Dock area is not to be used as a staging area or storage area for General Contractor's/Constructor's equipment or materials.

11.7. No parking is allowed in receiving area, the area is only to be used for loading and unloading.

11.8. All General Contractors/Constructors are not permitted to park at SickKids Atrium parking as this is reserved for patients, families, and staff only.

11.9. All General Contractors/Constructors using the loading dock must use safe work practices including, but not limited to:

- Using the designated area only for loading and unloading.
- Using an appropriate dock plate to ensure no gaps between the truck and dock.
- Turning off vehicle engines while loading and unloading.
- Appropriately securing the vehicle to avoid movement during loading and unloading.
- Using a competent person as a signaler when backing vehicles.
- Using walkways and stairs to avoid vehicular traffic.
- Handling and transporting materials and equipment safely to prevent injury to persons or damage to property.

11.10. General Contractor/Constructor and their suppliers shall cooperate with SickKids and other contractors and suppliers to ensure they can separate their work in time or space in the loading dock area, travel paths, work sites and the like to ensure that SickKids is not considered the Constructor as defined by the OHS Legislation (refer to **Appendix F** for Contractor Loading Dock Protocol).

PGCRL and PSC The booking of the Loading Dock for after-hours use (4pm to 7am) shall be requested by the General Contractor/Constructor through the SickKids atyourservice via email (atyourservice@sickkids.ca). The booking or use of Loading docks during operational hours (7am to 4pm) shall be coordinated with the Logistics Supervisor at PGCRL (416-813-7654 x 309059)

12. Storage of Materials

12.1. General Contractor/Constructor, Sub Contractors shall store materials, equipment, and supplies within the designated construction site. If the designated construction site is insufficient to store their materials, equipment, and supplies, the General Contractor/Constructor, Sub Contractors shall make their own arrangements and be responsible for offsite storage.

12.2. SickKids will not be able to provide storage space outside the designated construction site due to space limitations.

13. Waste Management

13.1. If General Contractor/Constructor requests to place a construction bin on site, arrangements are to be made with SickKids Project Manager/Project Coordinator via email

- SickKids Project Manager/Project Coordinator will forward the requests to other departments accordingly.
- General Contractor/Constructor is only allowed to use the construction bin they have brought on site.
- General Contractor/Constructor is not permitted to share bins with others.
- There is only one dedicated construction bin spot available at the loading dock, on a first come first serve basis.
- Construction bin is only permitted at the Loading Dock between 5pm – 6am and shall be removed daily.

- If the bin spot has not been booked by others, Contractors/Constructors' bin can occupy the bin spot for 1 extra consecutive day, as arranged and approved through atyourservice via email.
- Permanent construction bins are not permissible at the loading dock.

PGCRL and PSC
Due to space restriction at the Loading Dock, only one bin is permitted at any time in the Loading Dock for all General Contractors/Constructors. General Contractor/Constructor shall schedule with SickKids Project Manager/Coordinator and PGCRL loading dock master a designated time for construction bin drop off and pick up.

SickKids Project Manager/Coordinator will send email notification to inform stakeholders prior to drop off and pick up.
General Contractor/Constructor must arrange with SickKids Project Manager/Coordinator via an Activity Permit.

13.2. The General Contractor/Constructor is to ensure that no other General Contractors/Constructors or SickKids staff are within the garbage disposal area when disposing of material. If conflicts occur, the SickKids Project Manager/Coordinator will schedule access to the area in coordination with other General Contractors/Constructors and / or with Plant Operations / Housekeeping.

13.3. General Contractors/Constructors are responsible to clean up debris around the General Contractor's/Constructor's waste bin at the Loading Dock.

13.4. Scrap metal may be deposited into the SickKids scrap metal bin located in the west loading dock of the main campus. All deposited scrap metal will be the property of SickKids. Only one General Contractor/Constructor at a time may use the bin. General Contractor/Constructor or subcontractors are not permitted to remove/retrieve items deposited in the bin at any time.

13.5. General Contractor/Constructor is to only use the designated construction service elevator for removal of waste to their construction bin (Annex / Atrium – Burton Wing elevator, PGCRL – Service elevator).

13.6. Transportation of light waste, at any time, must be contained within a clean bin with secure cover.

13.7. Transportation of heavy waste or large volumes of waste shall be removed during off hours and properly contained within a bin with a secure lid or wrapped tightly in a tarp so no debris or dust may escape during transportation.

13.8. The bin or cart wheels must be clean during transportation so no track marks are left behind. General Contractor/Constructor to ensure transport route is clean of tire tracks. General Contractor/Constructor to protect floor surfaces to avoid damage by equipment and transport.

13.9. Use of SickKids waste trucks or carts for transport of any debris is prohibited.

14. System By-Pass, Shutdowns or Access

14.1. General Contractors/Constructors requesting a bypass of the Fire Alarm and Suppression System must complete a Fire Alarm System By-Pass Request Form and submit electronically.

Bypass of fire alarm system shall be submitted one week in advance of the work by Wednesday at 3pm (refer to **Appendix O** for form). All late requests will be declined and not processed. Forms can be obtained from the SickKids Project Manager/Project Coordinator.

The form shall be emailed to atyourservice@sickkids.ca and cc SickKids Project Manager/Project Coordinator. A By-Pass Request Form (refer to **Appendix O** for form) must be submitted for each day of work for each fire zone and floor that work is being completed in.

Electronic copy of Fire Alarm By-Pass Request Form will be emailed to General Contractor/Constructor by SickKids Project Manager/Coordinator at start of project.

Incomplete permits will not be authorized and work will not commence. General Contractor/Constructor is to ensure the system has been by-passed with Plant Operations before any work takes place that may activate the system.

The General Contractor/Constructor **(name of the site contact on the Fire Alarm By-Pass request form)** is to notify the Building Operator in person, at the end of each day that the work for the day is completed and ensure that the Fire Alarm System is re-activated before leaving. Failure to do so is contrary to the Ontario Fire Code and a violation of the contract.

Any such violation will result in a penalty levied against the Contractor/Constructor in the amount of $1,500.00; the same penalty for a false fire alarm caused by the Contractor. For record purposes, the Contractor/Constructor is to obtain the name of the Building Operator to confirm they have met and ensure the Fire Alarm System has been reinstated.

14.2. For shutdown of major building systems, (i.e., medical gases, water lines, sprinkler system, electrical panels…) the General Contractor/Constructor shall complete the Shutdown Request Form (refer to **Appendix O** for form) and submit to the appropriate SickKids Project Manager/Coordinator at least twenty (20) Business Days prior to the planned shutdown. The minimum 20 business day notice is to allow the hospital sufficient time to conduct an investigation on what impact the shutdown may have to the facility.
Electronic copy of Shutdown Request Form will be emailed by SickKids Project Manager/Coordinator to the General Contractor/Constructor at start of project.
The submitted Shutdown Request Form will be forwarded by SickKids Project Manager/Coordinator to the appropriate SickKids Building Operations Manager for further investigation.

PGCRL Building Operators are on site during the hours of 6a.m. to 4p.m. for fire alarm by-pass requests and shutdown requests; any after-hours shutdown requests will need to be coordinated with Plant Operations at the cost of the project.

14.3. General Contractors/Constructors who will be operating with an open flame or producing heat and /or sparks are required to complete and have approved a Hot Work Permit (refer to **Appendix O** for form) prior to commencing work.

14.4. General Contractors/Constructors requiring to perform work on any roof area must adhere to the Roof Access Procedures & Requirements document (refer to **Appendix J**) and submit a Roof Work Review Form (refer to **Appendix O** for form).

15. Site Containment

General Contractors/Constructors shall familiarize themselves with and strictly follow SickKids Site Containment requirements during construction, renovations and building maintenance.

15.1. General Contractors/Constructors shall follow the latest version of the CSA Infection Control Standards CAN/CSA-Z317.13 Infection Control during Construction, Renovation, and Maintenance of Health Care Facilities (latest edition) and the *SickKids Construction Site Hoarding* standards (see **Appendix G**).

15.2. Hoarding and material movement plans should be reviewed with Occupational Health and Safety, other relevant representatives and the SickKids Project Manager/Coordinator. Infection Prevention and Control (IPAC) will be included for any projects that involve patient care areas, or where any patient care supplies/equipment are found.

15.3. Adhere to SickKids policies on the access of ceiling spaces in surrounding areas. Refer to the **Appendix H** for the *Guidance Document for Contractors on the Use of Containment Carts or Enclosures.*

15.4. Set up hoarding before any work is performed; hoarding must be approved prior to work starting.

15.5. All construction zones shall be negatively pressured at all times during construction unless decided otherwise in consultation with the IPAC representative and SickKids Project Manager/Coordinator.

15.6. All air supply and exhaust within a construction zone are to be sealed to prevent dust migration into occupied space.

15.7. Clean up site prior to hoarding removal.

a. Contractor/Constructor performs *final construction clean*;
b. IPAC personnel conduct an initial inspection before the hoarding comes down;
c. Upon the removal of construction hoarding, SickKids' Housekeeping performs the final *terminal clean*; and
d. IPAC personnel conduct final inspection and sign off.

Depending on the complexity of each project, hoarding removal process should be reviewed with IPAC and Occupational Health & Safety.

PGCRL Bio-Risk Program Manager to review Wet Lab Research Areas prior to the removal of hoarding.

Definitions:
Final Construction Clean – a state of cleanliness which involves wipe down of all horizontal and vertical surfaces at the end of the project that allows for effective terminal cleaning of the construction site by SickKids Housekeeping staff.

Terminal Clean – performed by SickKids Housekeeping staff to remove contaminating micro-organisms within the space to the point where it can be safely used for patient care.

Identify any additional work after hoarding is removed.

i. Security of Site
   - If it is an enclosed site, door shall remain locked at all times.
   - If it is an open area, other precautions must be taken such as caution tape and signs identifying the site as a restricted area.

ii. Restriction of access shall remain before occupancy is granted from City inspection.

16. Disruptive Work

General Contractor/Constructor should understand that renovations or construction work in a healthcare, teaching, and research facility can be disruptive to the surrounding and affected department(s) depending on the sensitivity of the area. The General Contractor/Constructor shall select construction methods that will minimize disruptive work and will be required to coordinate with the SickKids Project Manager/Coordinator, any work that is disruptive to surrounding and affected department(s) be performed during off hours or at times that are agreeable with the surrounding and affected department(s).

Disruptive work can be considered, but not limited to the following: noise, vibration, odors, blockage of corridors, shut down of services, etc.

The General Contractor/Constructor is required to provide notification to the SickKids Project Manager/Coordinator on any activity that can be considered disruptive prior to any work taking place. The SickKids Project Manager/Coordinator will discuss with the appropriate department(s) timeframes as to when the disruptive work can take place.

The General Contractor/Constructor should be prepared to cease work; if advised by the SickKids Project Manager/Coordinator that complaints of disruption to activities is being experienced by staff, patients or visitors; and find alternate methods of carrying out the work to avoid disruptions or schedule at timeframes that is acceptable to SickKids.

In the event that staff or members of the public (patients/families/visitors) approach a General Contractor/Constructor with safety concerns or complaints, the General Contractor/Constructor is to immediately inform the SickKids Project Manager/Coordinator about the concerns and await guidance.

Main Campus and PGCRL
General Contractor/Constructor shall provide a minimum two (2) week look ahead schedule for upcoming disruptive work to the SickKids Project Manager/Coordinator in order to communicate with the surrounding and affected department(s). Look-ahead period may vary per project.

Submission shall be submitted on Thursday of every week for Stakeholders review on Friday.

Look ahead schedule should include noise level based on a scale of 5 to 10. Schedule should be submitted 1 week prior to work commence.
Level 5: Quiet work that may be heard periodically; Level 10: Impact to surrounding areas and floors above and/or below.
Refer to **Appendix O Forms** for details.

17. Hospital Emergency Codes

All SickKids emergency colour codes are located on the back of all I.D. Badges and also forms part of the SickKids Hospital Policy.

17.1. **CODE RED** – Fire Alarm

- **Refer to section 8.0 for Fire Procedures**

17.2. **CODE BLUE** – Resuscitation

- Code Blue is the emergency colour code response for an actual or potential respiratory and / or cardiac arrest (resuscitation event)

- For medical emergencies in the Annex and Atrium areas, Code Blue can be activated in any situation where you feel the additional support and resources provided by the Code Blue Team are needed by:

  a. Dialing 25 – state exact location

  b. Pressing the automatic Code Blue button within patient areas

- For adults – activate Code Blue and then dial 9–911

- Automated External Defibrillator (AED) are installed at the main hospital and PGCRL and are at the following locations:

  a. In the SickKids hospital, main campus:
     - Main Floor
       - Near information desk
       - Cafeteria Elm Street wall
       - Family Resource Centre (Black Wing)
       - Gerrard entrance by Tim Hortons (Hill Wing)
     - First Floor (Atrium)
       - Chapel/Muslim Prayer Room
     - Parking Garages
       - Inside Vestibule on each level

  b. PGCRL
     - AEDs are located in the main lobbies, level 1, 2, and 3.

- For medical emergencies at SickKids off-site locations or outside of the Annex and Atrium areas, please follow the instructions below:

  a. Dial 9-911.

  b. First responders should provide aid and support to the best of their ability including basic life support until help arrives.

  c. Inform building security/property management staff at your location that Emergency Medical Services have been called.

17.3. **CODE ORANGE** – Disaster

- Code Orange is the emergency colour code response for a potential or actual disaster.
- There are 2 levels to a code orange:
    - Level 1 - you should contact your immediate supervisor for further instructions.
    - Level 2 - you should immediately stop working and report to the site supervisor.

17.4. **CODE GREEN** – Evacuation

- Code Green is the emergency colour code response to alert staff of an evacuation.
- The fire alarm evacuation signal (120 beats per minute) will sound for 5 minutes followed by the overhead announcement to alert staff of the Code Green status and location.
- If you hear Code Green announced, it means that you should immediately stop working and report to the Site Supervisor (if safe to do so in your area) for instructions on evacuation.

17.5. CODE YELLOW – Missing Patient

- Code Yellow is the Emergency colour code response for a missing/abducted child.
- If you hear Code Yellow announced, you should familiarize yourself with the description of the missing patient and check the area you are working in. If you find the patient or someone matching the description, please call extension 5555 on any internal telephone.

17.6. **CODE BLACK** – Bomb Threat

- Code Black is the emergency colour code response for a Bomb Threat.
- If you hear Code Black announced search your area and place red "EMERGENCY" magnets on the outside of the rooms to indicate that the room has been searched.
- Call 6500 Emergency Measures Command Center after you have completed searching your area or if suspicious object has been found.
- DO NOT TOUCH ANY SUSPICIOUS OBJECTS!

17.7. **CODE BROWN** – Hazardous Spill

- Code Brown is the emergency colour code response for a Hazardous Spill.
- All Contractors/Constructors must know the hazards and precautions for all materials that they handle or use and take all reasonable precautions to prevent a spill, leak or uncontrolled release of the substance.
- Contractors/Constructors must ensure that they have the appropriate training and equipment to safely handle a spill of all material and for all quantities that they handle or use at SickKids.
- In the event that a General Contractor/Constructor causes or identifies a spill where the hazard is unknown or cannot safely be handled by the Contractor's/Constructor's workers, immediately call Communications at extension 5555 to report the spill. Provide details, including the name and number of the person in charge. Evacuate all workers to a safe zone and wait to be contacted by the SickKids Code Brown incident leader for further direction.

17.8. **CODE GREY** – System/Infrastructure Failure

- Code Grey is the emergency colour code designation used to alert staff of a system or infrastructure failure.

- Code Grey response will be dependent on the nature, location and suspected duration of the problem (e.g., Code Grey – Loss of commercial power).

- Staff members suspecting a problem should refer the situation to their immediate supervisor for action.

17.9. CODE WHITE – Violent Situation

- Code White is the emergency colour code designation used to alert staff of an actual or potential situation involving agitation, aggression and/or violence.

- At present time Code White is not announced overhead.

- Code White is activated by dialing 5555 or by using clinical or security response buttons (i.e. hospital panic buttons) where applicable.

- In order to properly respond to a code white, staff must provide the following information:

  Location in detail (if possible)
  - Building (i.e. main campus, PCRL)
  - Floor
  - Department
  - Room number

17.10. CODE PURPLE – Armed Individual / Hostage Taking

- Code Purple is the emergency colour code designation used to alert staff of an actual Armed Individual or Hostage situation.

- If you hear a Code Purple announced, staff in affected area should:

  - Evacuate the affected area and warn others if it is safe to do so; if it is not safe to do so, evacuate immediately and seek cover behind locked doors if possible.

  - Remain out of public view until “Code Purple all Clear” announcement is made.

17.11 CODE SILVER – Active Attacker

- Code Silver is the emergency colour code designation used to alert staff of an individual who is armed with a weapon and is actively demonstrating their intent to harm or potentially kill others in a confined and populated area within the hospital. An active attacker is a mobile threat, capable of relocating to other areas of the hospital with a weapon.
- The Code Silver policy is designed to protect life and mitigate harm by following the "Run, Hide, Defend" principles, and involving Toronto Police Services (TPS) as early as possible.

18. Separation of Projects

Separation shall be maintained between General Contractors/Constructors and SickKids Staff of common use areas such as loading docks, mechanical and electrical rooms, elevators and routes to projects. In addition, methods for controlling the movement of workers from one project to another will be discussed between SickKids Project Manager/Coordinator, the General Contractors/Constructors and SickKids support staff along with control of services that may run through more than one project. It is the General Contractor's/Constructor's responsibility to follow designated routes to / from projects and adhere to the separation information. The General Contractor/Constructor shall ensure this information is communicated to all sub-contractors and employees working on their project. General Contractors/Constructors shall notify the SickKids Project Manager/Coordinator if any changes are required to the route to the project, elevators or any other circumstances that changes the separation plan. SickKids shall monitor the separation of Constructors.

Key areas for separating Constructors:

- Two General Contractors/Constructors cannot be at the loading dock or garbage disposal area at the same time.
- Two General Contractors/Constructors cannot be in the same Electrical or Mechanical room at the same time.
- Service elevators will be assigned for use by General Contractors/Constructors ensuring separation of time.
- Separate route for each General Contractor/Constructor to and from project site.

- Sign in/out requirements for each project.

Options for SickKids employees or General Contractors/Constructors to work on Constructor's projects:

a. The maintenance/service work is contracted out to the General Contractor/Constructor for the duration of the project.

b. SickKids service providers/Contractors become assigned sub-contractors to the General Contractor/Constructor.

c. Agreement/Contract is drafted between the General Contractor/Constructor and SickKids contractors/service providers whereby the responsibility for health and safety of SickKids contractors performing work on the project will be assumed by the General Contractor/Constructor.

d. Separation Time: SickKids workers/contractors separated by time (scheduling) when the General Contractor's/Constructor's personnel are not on site.

e. Separation by Space: Physical barrier or distance between the General Contractor's/Constructor's workers and SickKids workers/contractors.

If emergency work is required at a designated project site by SickKids Plant Operations, the work is to be coordinated between the General Contractor/Constructor and SickKids Project Manager/Coordinator to:

a. General Contractor/Constructor shall vacate immediately.
b. Work to be expedited once General Contractor/Constructor has completed work for the day.

19. Separation Plans

Prior to the start of work, the General Contractor/Constructor and SickKids stakeholders will jointly develop a project-specific separation plan to aid in the separation of projects and to reduce risk to SickKids patients, visitors and staff. This plan will include the following as a minimum:

a. Hoarding plan
b. Worker and material access routes
c. Elevator access & dock access times (if specific times are required, bookings still need to be made)
d. Washroom designations
e. Requirements for General Contractor/Constructor sign-in &
f. Additional requirements to address any H&S or IPAC concerns (work in hallways, etc.)

All requests for changes to a separation plan once developed must be submitted to SickKids for review and approval prior to any alteration of the separation plan. SickKids reserves the right to amend or alter the separation plan at any time.

20. Other

20.1. Smoking of any type (i.e., tobacco, e-cigarettes, vaping, cannabis, etc.) is not allowed anywhere on SickKids property that is owned, leased and/or occupied by SickKids. This includes the 9-metre radius external to any facility entrance / exit. The General Contractor/Constructor should ensure that smoking disposal containers are used to keep the grounds, parking lots and roadways free of cigarette butts. There is no smoking in any of the outdoor courtyards or open/rooftop mechanical spaces. Noncompliance will result in removal from site and is subject to a fine from the City of Toronto By-Law Enforcement Office.

20.2. Refer to the Appendices for other SickKids Policies that pertain to your project.

20.3. Respect the privacy of patients, families, employees and all associated individuals. Any personal or medical information that a Contractor may come across, including the fact that someone is a patient of the hospital, is confidential and cannot be shared. Do not take photographs or videos that include patients or patient information. Please raise any privacy issues with the SickKids Project Manager/Coordinator immediately.

20.4. Any work for the project that requires access into occupied areas must be pre-scheduled with the SickKids Project Manager/Coordinator. General Contractor/Constructor may contact Protection Services at ext. 207122 for access into locked areas after notification.

PGCRL
General Contractor/Constructor shall pre-schedule any after-hours work through the SickKids Project Manager/Coordinator, and determine if supervision is required for the scheduled work. General Contractor/constructor must be escorted by Protection Services to the work area for all after-hours work. The Data Centre and LAS will require supervision at all times, and must be coordinated with SickKids Project Manager/Coordinator along with Data Centre and LAS Manager(s).

20.5. The hospital's internal Emergency Number is x5555.
Any safety or medical **emergency on site, General Contractor/Constructor should call 911.**

Procedures for Construction, Renovation & Physical Plant Projects

Appendices

SickKids®

V. 2025.01

Table of Contents

Appendix A

Contractor Safety

Appendix B

Infection Control Related to Building Maintenance, Repair, Construction, Renovation and Physical Plant Projects

Appendix C

Contractors – Asbestos Operations

Appendix D1

Staff Immunization and Surveillance Policy

Appendix D2

COVID-19 Vaccine Policy

Appendix E

SickKids Fire Alarm Bypass – Hot Work & Fire Protection Impairment Information, Procedures & Responsibilities

Appendix F

Contractor Loading Dock Protocol

Appendix G

Construction Site Hoarding Standards

Appendix H

Guidance Document for Contractors on the use of Containment Carts or Enclosures

Appendix I

Construction Guidance Document for Work in Areas with the Potential for Q-fever

Appendix J

Roof Access Procedures & Requirements

Appendix K

Confined Space Program

Appendix L

PGCRL Indoor Air Quality

Management Program Plan

Appendix M1

Contractor Orientation Presentation

Appendix M2

Construction Orientation Sticker Policy

Appendix N

Activity Permit Policy

Appendix O

Forms

Appendix A

Contractor Safety

SickKids®

This is a CONTROLLED document for internal use only. Any documents appearing in paper form are not controlled and should be checked against the electronic SharePoint version prior to use.

SickKids	Document Scope: Hospital-wide Administration
	Document Type: Policy,Procedure Approved on 2022-12-30 Next Review Date: 2023-12-30
	Contractor Safety — Version: 3

1.0 Introduction

The purpose of this policy is to outline the responsibilities of all persons involved in the contractor management process at SickKids in order to minimize the risk of injuries or incidents.

This policy outlines SickKids' health and safety obligations as an owner and/or employer when selecting, hiring or working with contractors and supplements the requirements of the Occupational Health and Safety Act, Regulations and related legislation.

2.0 Definitions

A **competent person** means a person who,

- is qualified because of knowledge, training and experience to organize the work and its performance,
- is familiar with this Act and the regulations that apply to the work, and
- has knowledge of any potential or actual danger to health or safety in the workplace.

Construction includes the erection, alteration, repair, dismantling, demolition, structural maintenance, painting, land clearing, earth moving, grading, excavating, trenching, digging, boring, drilling, blasting, or concreting, the installation of any machinery or plant, and any work or undertaking in connection with a project but does not include any work or undertaking underground in a mine.

A **constructor** is a person who undertakes a project for an owner and includes an owner who undertakes all or part of a project by themself or by more than one employer.

An **employer** is a person who employs one or more workers or contracts for the services of one or more workers and includes a contractor or subcontractor who performs work or supplies services and a contractor or subcontractor who undertakes with an owner, constructor, contractor or subcontractor to perform work or supply services.

The **owner** is a trustee, receiver, mortgagee in possession, tenant, lessee, or occupier of any lands or premises used or to be used as a workplace, and a person who acts for or on behalf of an owner as an agent or delegate.

A **project** means a construction project, whether public or private, including,

- the construction of a building, bridge, structure, industrial establishment, mining plant, shaft, tunnel, caisson, trench, excavation, highway, railway, street, runway, parking lot, cofferdam, conduit, sewer, water main, service connection, telegraph, telephone or electrical cable, pipe line, duct or well, or any combination thereof,
- the moving of a building or structure, and
- any work or undertaking, or any lands or appurtenances used in connection with construction.

3.0 Policy

SickKids will select, hire and work with competent contractors that meet our occupational health and safety standards.

SickKids staff members who are involved with hiring, selection or work with contractors on construction projects, maintenance, or other services will follow the procedures to meet SickKids' health and safety obligations during prequalification, selection, administration, monitoring, and evaluation of contract work.

©The Hospital for Sick Children. All Rights Reserved. This document is specific to SickKids internal activities at the time of printing. SickKids does not accept responsibility for use of this material by any person or organization not associated with SickKids. No part of the document should be used for publication without appropriate acknowledgement.

4.0 Procedure to Define the Work and the Responsibilities

All SickKids staff members who are hiring a contractor must first define the work and the responsibilities as described below.

4.1 Review section 2.0, as well as the size, cost and scope of the work, to determine if the work meets the definition of a construction project.

Examples of work that meets the definition of a construction project include:

- Repair of or maintenance to a building structure
- The installation of machinery or equipment

Examples of work that is not considered a construction project include:

- Repair or alteration of machinery
- Removal or installation of carpeting
- Contracting for services

4.2 If the work meets the definition of a construction project AND the contractor will fully and completely control the project, then the contractor may be designated as the constructor for this project. The contractor must fulfil the responsibilities of a constructor outlined in section 5.1. To fully and completely control the project, the work must be separated in time and space from other SickKids operations or work performed by SickKids staff.

The SickKids Project Manager will fulfil the obligations of the owner and must fulfil the responsibilities outlined in section 5.2.

Tools have been created to help SickKids staff who hire contractors comply with the organizations statutory responsibility contained in Section 5.0 of this policy. Tools are located in the Contractor Safety webpage (under Staff Support Services, Occupational Health and Safety Services).

4.3 If the work does NOT meet the definition of a construction project OR the work cannot be separated in time and space from SickKids operations or staff (i.e. the site is NOT fully and completely controlled by the contractor), then SickKids is the owner, employer and constructor for the project.

The SickKids staff member who is hiring the contractor is the official designate of SickKids (SickKids Contact Person) and will be responsible for fulfilling the health and safety obligations of the owner, employer and constructor. Refer to the responsibilities outlined in section 6.1.

©The Hospital for Sick Children. All Rights Reserved. This document is specific to SickKids internal activities at the time of printing. SickKids does not accept responsibility for use of this material by any person or organization not associated with SickKids. No part of the document should be used for publication without appropriate acknowledgement.

This is a CONTROLLED document for internal use only. Any documents appearing in paper form are not controlled and should be checked against the electronic SharePoint version prior to use.

5.0 Construction Projects – Contractor Retained as Constructor

5.1 Responsibilities of the Constructor

The constructor has the greatest degree of control over the project and is ultimately responsible for the health and safety of all workers. The constructor must ensure that all of the employers and workers on the project comply with the Act and Regulations. Constructors have key responsibilities and must ensure that:

- The measures and procedures prescribed by the Act and Regulations are carried out on the project
- Every employer and worker performing work on the project complies with the Act and Regulations
- The health and safety of workers on the project is protected
    - A health and safety representative or a joint health and safety committee is established, as required
    - The Ministry of Labour is notified of a project, when and as required
    - The Ministry of Labour is notified of an accident or occurrence, when and as required
    - Every contractor or subcontractor receives a list of designated substances at the project site before entering into a binding contract
    - Written emergency procedures are established for the project and posted
    - A supervisor is appointed for every project at which five or more workers will work at the same time

The constructor will provide the Project Manager with information related to:

- The hazards associated with the execution of the work
- The control measures that will be implemented to control those hazards
- Certificates of insurance
- WSIB clearance certificate
- Canadian Construction Document Committee (CCDC) document
- Documents pertaining to the commissioning or maintenance of the area or equipment (following completion of the project)

5.2 Responsibilities of the SickKids Project Manager

The Project Manager will administer the parameters and conditions of the contract and is responsible for ensuring that they:

- Understand the health and safety legislation and fulfil the role/responsibility of SickKids as the owner/employer for the work
- Include a Pre-qualification Safety Review of contractors in the selection process (refer to section 7.0)
- Arrange for health and safety consultation at the planning, design, and construction phases of the project
- Identify the site-specific hazards related to the project site or work including, but not limited to:
    - Designated substances (e.g., asbestos, mercury, lead, silica, etc.)
    - Biological, chemical and radiation hazards
    - Laboratory hazards
    - Mechanical, electrical, and other safety hazards
    - Mould or other structure-related hazards
- Advise the contractor of the site-specific hazards and provide the relevant documentation such as surveys, reports, etc.
- Familiarize the contractor with the work site and/or provide a site orientation

©The Hospital for Sick Children. All Rights Reserved. This document is specific to SickKids internal activities at the time of printing. SickKids does not accept responsibility for use of this material by any person or organization not associated with SickKids. No part of the document should be used for publication without appropriate acknowledgement.

- Request the completion of a site-specific safety plan from the contractor prior to the start of work
- Ensure the completion of an activity permit as per policy
- Establish a process to coordinate the work and ensure separation of the work in time and space from other contractors and SickKids staff
- Establish a communication and notification process to address any health and safety concerns, Ministry of Labour inspections, etc.
- Monitor the progress of the work to ensure compliance with the terms of the contract
- Obtain and retain all required documents and information from the constructor
- Arrange for training of SickKids staff who will occupy, operate, or maintain the area or equipment

5.3 Responsibilities of Occupational Health and Safety Services

Occupational Health and Safety Services (OHSS) will:

- Develop and maintain the Contractor Safety policy
- Provide training, as needed, to Project Managers, Contractors, or SickKids staff on meeting the occupational health and safety obligations of the owner/employer
- Participate in the planning and design phases of a project and make recommendations to the Project Manager on health and safety issues
- Consult with the Project Manager to review the health and safety program, policies, or procedures of the contractor during pre-qualification or selection
- Consult with the Project Manager to review the site-specific safety plan prior to the start of work
- Review and sign off on the completed activity permit as per policy
- Complete audits/inspections of the site as required
- Periodically review and revise the occupational health and safety requirements in the contract management documents

5.4 Responsibilities of All SickKids Staff

In a construction project where the contractor is acting as the constructor, SickKids staff will refrain from:

- Acting in a manner that causes SickKids to be seen as supervising, directing, or controlling the daily activities of the contractor
- Telling the contractor's workers how to perform the work
- Interfering with, or stopping the performance of the work (except if the situation may lead to imminent personal injury or property loss)

Concerns related to the work or contractor's workers should be promptly referred to the SickKids Project Manager, who will address the concerns as the owner's designate.

6.0 Contracting for Services or Projects – SickKids as Constructor

If the work does NOT meet the definition of a construction project OR the work cannot be separated in time and space from SickKids operations, then SickKids is the constructor and is ultimately responsible for the health and safety of all workers on the project and compliance with the Occupational Health and Safety Act and Regulations. The SickKids staff

©The Hospital for Sick Children. All Rights Reserved. This document is specific to SickKids internal activities at the time of printing. SickKids does not accept responsibility for use of this material by any person or organization not associated with SickKids. No part of the document should be used for publication without appropriate acknowledgement.

member who is hiring a contractor to work on a project or provide services (SickKids Contact Person) will fulfil the health and safety obligations of the owner, employer and constructor related to the project or work.

6.1 Responsibilities of the SickKids Contact Person

The responsibilities of the employer are outlined in sections 25 and 26 of the Occupational Health and Safety Act. These sections assign a mixture of general and specific duties to employers and provide for other duties to be prescribed by regulation. The general duties require an employer to:

- Take all reasonable precautions to protect the health and safety of all staff
- Ensure that equipment, materials and protective equipment are maintained in good condition
- Provide information, instruction and supervision to protect worker health and safety

In addition, the SickKids Contact Person is responsible for ensuring that they:

- Understand health and safety legislation and fulfil the role/responsibility of SickKids as the owner/employer/constructor for the work
- Include a Pre-qualification Safety Review of contractors in the selection process (refer to section 7.0)
- Notify the Ministry of Labour of a project, when and as required
- Arrange for health and safety consultation, if necessary, at the planning/design phase of the work
- Identify the site-specific hazards related to the project site or work including, but not limited to:
    - Designated substances (e.g., asbestos, mercury, lead, silica, etc.)
    - Biological, chemical and radiation hazards
    - Laboratory hazards
    - Mechanical, electrical, and other safety hazards
    - Mould or other structure-related hazards
- Advise the contractor of site-specific hazards and provides relevant documentation before entering a binding contract
- Familiarize the contractor with the work site and/or provides a site orientation
- Request the completion of a site-specific safety plan from the contractor prior to the start of work if required
- Ensure the completion of an activity permit as per policy
- Establish a process to address health and safety concerns, emergency situations, reporting of incidents during the work
- Monitor the progress of the work to ensure:
    - Compliance with the terms of the contract
    - Compliance with the Occupational Health and Safety Act and Regulations
    - Compliance with applicable SickKids health and safety policies and procedures
    - Adequate supervision of the contractor's workers
    - Resolution of safety concerns arising from any sources related to the contract
    - Work is stopped immediately if situations may lead to imminent personal injury or property loss
- Obtain and retain all required documents and information from the contractor
- Complete audits/inspections of the site as required
- Arrange for training of SickKids staff who will occupy, operate, or maintain the area or equipment

©The Hospital for Sick Children. All Rights Reserved. This document is specific to SickKids internal activities at the time of printing. SickKids does not accept responsibility for use of this material by any person or organization not associated with SickKids. No part of the document should be used for publication without appropriate acknowledgement.

6.2 Responsibilities of All Contractors

All contractors are responsible for ensuring that:

- Only competent and trained supervisors and workers will be assigned to work at SickKids
- All workers will comply with the Occupational Health and Safety Act and Regulations
- All workers will comply with the relevant SickKids health and safety policies and procedures
- All workers will promptly report an unsafe act, condition, injury, illness or incident to their supervisor and supervisors will promptly address the issues
- Shutdown of utilities (e.g., natural gas, steam, air, water, electrical, etc.) is coordinated with SickKids Facilities staff prior to the work requiring shut down
- All equipment and tools (e.g., ladders, fork-lifts, etc.) is supplied by the contractor, unless specifically agreed to by SickKids in writing
- All equipment and tools used at SickKids are maintained in good working condition and are certified if required by regulations
- Equipment and tools are operated only by workers who have been properly trained to do so
- All personal protective equipment (e.g., hard hats, eye/face protection, respirators, gloves, etc.) is appropriate for the hazard and work
- Workers have been trained and fit tested to safely use/wear the personal protective equipment

7.0 Contractor Prequalification Safety Review

SickKids staff members (i.e. Project Manager, SickKids Contact Person, etc.) who are contracting for work are responsible for taking the necessary steps to pre-qualify contractors prior to the bidding and/or award of a contract or prior to the start of a job. The safety competence and safety performance of the contractor must be given equal importance to other selection criteria such as costs and service. As part of the prequalification safety review, the contractor should be asked to produce evidence of:

- Experience related to the nature and scope of the work
- Knowledge of the health and safety legislation that applies to the work
- A written occupational health and safety policy and program
- Written procedures relevant to the nature and scope of the work
- Competent supervisors as defined by the Occupational Health and Safety Act
- A process for supervising workers and enforcing health and safety practices
- Certificates of training for all workers related to the hazards and precautions of the work
- WSIB records on accident/injury data for the last 3 years
- Ministry of Labour inspection reports, if any, for the last 3 years

The Project Manager or SickKids Contact Person may request advice on health and safety issues related to contract work including the assessment of the contractor's health and safety program, the project outcome (i.e. work space renovation/construction, equipment installation, etc.), materials to be used (e.g., paints, cleaning products, finishes, solutions, emissions, etc.), the construction or renovation process, or the provision of a service. An occupational hygienist is available to consult on a variety of issues at the planning or design phase of a project including, but not limited to:

- Safe or ergonomic design of a work area, structure, process, equipment, furniture, etc.
- Safe handling, use and storage of chemical, biological or radiological agents

©The Hospital for Sick Children. All Rights Reserved. This document is specific to SickKids internal activities at the time of printing. SickKids does not accept responsibility for use of this material by any person or organization not associated with SickKids. No part of the document should be used for publication without appropriate acknowledgement.

- Control of emissions related to an operation, process, equipment, etc.
- Control measures and safe work practices used during the commission of the contract work

8.0 Pre-Start Meetings

The Project Manager or SickKids Contact Person will include the following health and safety requirements in the pre-start meeting:

- Review the specific hazards and safety precautions required for the project
- Discuss requirements for the contractor's compliance with the Act, Regulations and SickKids health and safety policies
- Obtain WSIB certificate at least every 60 days throughout the project
- Review the process to address health and safety concerns
- Review any specific emergency procedures (e.g., Code Red)
- Review the process for reporting of accidents/incidents/occurrences
- If applicable, review the requirements for:
- Confined Space Entry Program
- Material Safety Data Sheets (MSDS) on site
- Noise control measures
- Dust control measures
- Fall protection
- Use of personal protective equipment (e.g., hard hats, boots, eye protection, etc.)

9.0 Contractor Safety Evaluation

The Project Manager or SickKids Contact Person will review the health and safety practices as they related to the specific project or job at the completion of work. The Project Manager or SickKids Contact Person will provide recommendations for changes or improvements to the Contractor Safety policy to Occupational Health and Safety Services for consideration.

The Contractor Safety policy and procedure will be reviewed annually in consultation with the Joint Occupational Health and Safety Committee (JOHSC).

10.0 References

The Occupational Health and Safety Act – Construction Projects

©The Hospital for Sick Children. All Rights Reserved. This document is specific to SickKids internal activities at the time of printing. SickKids does not accept responsibility for use of this material by any person or organization not associated with SickKids. No part of the document should be used for publication without appropriate acknowledgement.

Appendix B

Infection Control Related to Building Maintenance, Repair, Construction, Renovation and Physical Plant Projects

SickKids®

This is a CONTROLLED document for internal use only. Any documents appearing in paper form are not controlled and should be checked against the electronic SharePoint version prior to use.

SickKids	Document Scope: Hospital-wide Patient Care	
	Document Type: Policy,Procedure Approved on 2021-01-13 Next Review Date: 2024-01-13	
	Infection Control Related To Building Maintenance, Repair, Construction, Renovation, and Physical Plant Projects	Version: 3

1.0 Introduction

Construction, renovation, and maintenance activities have become common in health care facilities to support continuous change and advances in healthcare delivery. Routine or corrective maintenance and renovation or construction projects pose particular risks to patients via potential contact or inhalation of dust particles that may carry fungal spores such as *Aspergillus spp.* or bacteria such as *Bacillus spp.* Exposure to these microorganisms may lead to severe illness and death. This document outlines SickKids' program for prevention of healthcare associated infections (HAIs) associated with these activities. The Infection Prevention and Control Program (IPAC) , Plant Operations, Facilities Departments, Project Managers, and Contractors are responsible to integrate the infection prevention and control principles in this policy throughout the planning, managing, and completion of each project. This process is identified as the Infection Control Risk Assessment (ICRA). This document applies to all SickKids' employees, architects, project managers, contract workers and others carrying on activities in this regard. Inherent in this document is that all Occupational Health and Safety requirements at SickKids will be followed.

2.0 Definitions

Contractor: For the purposes of this document "Contractor" is defined as the General Contractor, Prime Contractor, Sub Contractor, Tradesmen, Mechanics, Apprentices, Laborers, and Original Equipment Manufacturer Technicians, and includes SickKids' employees performing these tasks.

Infection Control Risk Assessment (ICRA): The process of determining the potential risk of transmission of various air and waterborne biological contaminants in the facility during construction, renovation, and maintenance activities. This will be a multidisciplinary, collaborative process that evaluates construction activities, types, and risk groups to determine a preventative measures level.

3.0 Policy

3.1 Compliance with Standards

- Plant Operation supervisors are to defer to CSA Standards Z317.13-17 (see section 8.0) for practices relevant to project as determined by the Preventative Measures Analysis (see section 5.0, 6.0, 7.0).
- ICRA recommendations and requirements submitted to Project Managers by IPAC must be included in project specifications and adhered to by Contractors.
- Facilities Management, Project Managers, and Contractors are to defer to CSA Standards Z317.13-17 for practices relevant to the project as determined by the Preventative Measures Analysis.
- CSA Standard Z317.13-17 *Infection control during construction, renovation, and maintenance of health care facilities* will be the default source for preventative measures during hospital maintenance, repair, renovation, or construction.
- CSA Standard Z8000-18 *Canadian health care facilities planning, design and construction* will be the default source for design standards during hospital maintenance, repair, renovation, or construction.

3.2 Building Upkeep, Maintenance and Repair

- Standardized control measures will be taken according to the work planned.

©The Hospital for Sick Children. All Rights Reserved. This document is specific to SickKids internal activities at the time of printing. SickKids does not accept responsibility for use of this material by any person or organization not associated with SickKids. No part of the document should be used for publication without appropriate acknowledgement.

This is a CONTROLLED document for internal use only. Any documents appearing in paper form are not controlled and should be checked against the electronic SharePoint version prior to use.

- Work sites of projects requiring Preventative Measures Analysis Level III or IV must be inspected and approved by an Infection Control Practitioner prior to the start of work.
- No work affecting the HVAC system will begin in the following locations until authorization from IPAC is obtained:
    - Emergency Department,
    - Isolation rooms in PICU, CCCU, NICU, 8A, 8B, 8D, OR waiting room, PACU,
    - Operating Rooms,
    - Central Reprocessing,
    - 7B (north and east corridor HVAC),
    - IGT,
    - Clinic 7 (main floor), or
    - CDIU.
- In patient care areas, during plumbing repairs, where water shutdown is ≥ 24 hours, the line (and bathroom faucets if also affected) must be flushed for at least 30 minutes before use. Protection to prevent aerosolization must be made.
- All department personnel must report to the assigned facilities supervisor when any breaches in real/perceived dust control or infection prevention and control practices are identified.
- Where corrective action is not easily determined, the supervisor will immediately halt work, and consult with IPAC.
- Work sites will be monitored by IPAC as needed

3.3 Construction, Renovation and Physical Plant Projects

- IPAC will be consulted during **all phases of planning** for all renovation and construction projects in the hospital to conduct an ICRA, and will sign off on all these projects. Infection control risks, interventions and control strategies will be considered in planning for new construction and/or renovation.
- For all renovation and construction projects, preventative measures will be determined during the planning phases and incorporated into project documentation.
- All department personnel must report to the assigned project manager (identified at site) when any breaches in real/perceived dust control or infection control practices are identified.
- Work sites of projects requiring Preventative Measures level III or IV must be inspected and approved by an Infection Control Practitioner prior to the start of work.
- Where corrective action is not easily determined, the project manager will immediately halt work, and consult with IPAC.
- Work sites will be monitored/inspected by IPAC as needed.

4.0 Responsibilities

Plant Operations Manager/ Facilities Project Manager (Project Lead):

- Identify at-risk construction, renovation, and demolition activities.
- Coordinate Class II and higher construction, renovation, and demolition projects with IPAC and other personnel, as appropriate.
- Ensure contract documents require contractors to implement ICRA requirements during construction
- Initiate an ICRA in the design and planning phase for each construction project.
- Routinely monitor construction for contractor compliance with the ICRA.

©The Hospital for Sick Children. All Rights Reserved. This document is specific to SickKids internal activities at the time of printing. SickKids does not accept responsibility for use of this material by any person or organization not associated with SickKids. No part of the document should be used for publication without appropriate acknowledgement.

This is a CONTROLLED document for internal use only. Any documents appearing in paper form are not controlled and should be checked against the electronic SharePoint version prior to use.

- Inspect construction areas after final cleaning and approve opening/reopening of the area.
- Verify that construction personnel receive orientation and training in the infection prevention and control measures identified on the ICRA prior to start of work.

Infection Control Practitioner:

- Complete and document ICRA, and submit to project lead.
- Inspect hoarding prior to beginning work in projects with Preventative Measures levels III and IV.
- Determine whether construction poses sufficient increased risk to require/recommend that patients be moved to an area of the facility that is not affected by construction.
- Assist the Project Lead in preparing contractor expectations for infection control practices and criteria for emergency work interruptions.
- Inspect construction areas after final cleaning and approve opening/reopening of the area.

Housekeeping Manager (or delegate):

- Work with IPAC to identify areas that need to be damp mopped/cleaned and clean these areas as scheduled.
- Thoroughly clean new and renovated areas before admitting or readmitting patients.
- Coordinate inspection of final cleaning with IPAC and the Facilities Manager prior to opening/reopening the area.

Affected area/department Manager:

- Work with IPAC to identify high-risk patients/areas.
- Follow procedures in approved ICRAs during construction.

Occupational Health and Safety will:

- Work with the Project Lead to develop and carry out indoor air quality and ventilation assessments as needed.
- Work with IPAC and the Project Lead during environmental investigations.
- Recommend appropriate personal protective equipment to be worn by maintenance/construction personnel.

5.0 Construction and Activity Type

(See table 3 in CSA: Z317.13-17)

Type A	Inspection and non-invasive activities. These include but are not limited to: a) Activities that involve a single controlled opening in a wall or ceiling for minor work or visual inspection, that is accessed by i. removing no more than one ceiling tile; or ii. opening of an access panel on a wall or ceiling; b) Painting (but not sanding) and wall covering; c) Electrical trim work; d) Minor plumbing work that disrupts the water supply to a localized patient care area (e.g. one room) for less than 15 min; and e) Other maintenance activities that do not generate dust or require cutting of walls or access to ceilings (other than as specified in item (a) above).

©The Hospital for Sick Children. All Rights Reserved. This document is specific to SickKids internal activities at the time of printing. SickKids does not accept responsibility for use of this material by any person or organization not associated with SickKids. No part of the document should be used for publication without appropriate acknowledgement.

This is a CONTROLLED document for internal use only. Any documents appearing in paper form are not controlled and should be checked against the electronic SharePoint version prior to use.

Type B	Small-scale, short-duration (e.g. less than 2 hours) activities that create minimal dust. These include but are not limited to: a) Activities involving access to and use of chase spaces; b) Cutting a small opening in a contained space where dust migration can be controlled, e.g., cutting of walls or ceilings to provide an access point for installing or repairing minor electrical work, ventilation components, telephone wires, or computer cables; c) Sanding or repair of a small area of a wall; and d) Plumbing work that disrupts the water supply of one or more patient care areas for less than 30 min.
Type C	Activities that generate a moderate to high level of dust, cause a moderate service disruption, require demolition, require removal of a fixed facility component (e.g. a sink) or assembly (e.g. a counter top or cupboard), or cannot be completed in a single work shift. These include but are not limited to: a) Activities that require sanding of a wall in preparation for painting or wall covering; b) Removal of floor coverings, ceiling tiles, and casework; c) New wall construction; d) Minor ductwork; e) Electrical work above ceilings; f) Major cabling activities; and g) Plumbing work that disrupts the water supply of one or more patient care areas for more than 30 min, but less than 1 hour.
Type D	Activities that generate high levels of dust, activities that necessitate significant service disruptions, and major demolition and construction activities requiring consecutive work shifts to complete. These include but are not limited to: a) Soil excavation; b) New construction that requires consecutive work shifts to complete; c) Activities that involve heavy demolition or removal of a complete cabling system; or d) Plumbing work that disrupts the water supply of more than one patient care area (e.g. two or more rooms) for 1 hour or more.

©The Hospital for Sick Children. All Rights Reserved. This document is specific to SickKids internal activities at the time of printing. SickKids does not accept responsibility for use of this material by any person or organization not associated with SickKids. No part of the document should be used for publication without appropriate acknowledgement.

This is a CONTROLLED document for internal use only. Any documents appearing in paper form are not controlled and should be checked against the electronic SharePoint version prior to use.

6.0 Population Risk Groups and Geographical Areas

(See table 2 in CSA: Z317.13-17)

Group 1 Lowest Risk	Group 2 Medium Risk	Group 3 Medium to High Risk	Group 4 Highest Risk
Examples: • Public corridors and spaces not on or directly attached to patient units or treatment locations • Office areas • Laundry and soiled linen cleaning areas • Physical plant workshops and housekeeping areas • Health records • Library • Auditorium • Chapel • Main Street • Exterior grounds • Mechanical spaces	Examples: • Outpatient areas (except those listed in group 3 or 4) • Autopsy • Morgue • Rehabilitation Services (PT, OT, Orthotics) • Play Park • Off site outpatient clinics • Bear Theatre • Offices where patients are present • Waiting areas **All corridors adjacent to these areas are included as medium risk**	Examples: • Patient care units/areas (except those listed in group 4) • Diagnostic Imaging (CT, GI/GU, MRI, U/S) • Nuclear Medicine • 4B • Laboratories • Food preparation, serving, and dining areas • Respiratory Therapy • Stores • Clean linen handling and storage • Surgical clinics • Food Court • Cafeteria/Terrace Café • Neonatal follow-up • Formula Room • Dentistry & Orthodontics clinic • Pulmonary Function • ENT Clinic • Plastic Surgery Clinic **All corridors adjacent to these areas are included as medium to high risk**	Examples: • PICU/CCCU • NICU • Operating Rooms, adjacent corridors, sterile corridor, and OR waiting area • SDAU/PACU • 6AB • ID Clinic • CDIU • 8A, 8B, 6E, 8D • Sears Cancer Clinic • 8C • 4D • 4C • All pharmacy preparation and admixture areas • IGT • Dialysis • Immunology Clinic • Transplant Clinic • CSD – Sterile Processing and supply areas • 4A • Starlight Room • All negatively pressurized rooms/areas • Trauma Room (ED) **All corridors adjacent to these areas are included as highest risk**

©The Hospital for Sick Children. All Rights Reserved. This document is specific to SickKids internal activities at the time of printing. SickKids does not accept responsibility for use of this material by any person or organization not associated with SickKids. No part of the document should be used for publication without appropriate acknowledgement.

This is a CONTROLLED document for internal use only. Any documents appearing in paper form are not controlled and should be checked against the electronic SharePoint version prior to use.

7.0 Preventative Measures Analysis

(See table 1 in CSA: Z317.13-17)

Population Risk Group	Construction Activity Type			
	Type A	Type B	Type C	Type D
Group 1	I	II	II	III/IV
Group 2	I	II	III	IV
Group 3	I	III	III/IV	IV
Group 4	I, II, III	III/IV	III/IV	IV

8.0 Related Documents

- CSA Z317.13-17 Infection control during construction, renovation, and maintenance of health care facilities (2017).
- Procedures for Construction, Renovation & Physical Plant Projects (Facilities Planning & Development)
- ICRA
- IPAC Site Inspection
- Capital Projects: Planning, Construction, Renovations, Redevelopment and Infrastructure Renewal ==>

9.0 References

Canada Communicable Disease Report. (2001). *Construction-related Nosocomial Infections in Patients in Health Care Facilities: Decreasing the Risk of Aspergillus, Legionella and Other Infections*. Division of Nosocomial and Occupational Infections Bureau of Infectious Diseases, Centre for Infectious Disease Prevention and Control, Health Canada.

Canadian Standards Association (2017). *Infection control during construction, renovation, and maintenance of health care facilities.* CSA Standard: CSA Z317.13-17.

Canadian Standards Association. (2018). *Canadian Health Care Facilities: Planning, design, and construction.* CSA Standard: Z8000-18.

©The Hospital for Sick Children. All Rights Reserved. This document is specific to SickKids internal activities at the time of printing. SickKids does not accept responsibility for use of this material by any person or organization not associated with SickKids. No part of the document should be used for publication without appropriate acknowledgement.

This is a CONTROLLED document for internal use only. Any documents appearing in paper form are not controlled and should be checked against the electronic SharePoint version prior to use.

Centers for Disease Control and Prevention. (2003). *Guidelines for Environmental Infection Control in Health-Care Facilities: Recommendations of CDC and the Healthcare Infection Control Practices Advisory Committee (HICPAC)*. U.S. Department of Health and Human Services, CDC: Atlanta, GA.

IPAC-Canada Healthcare Facility Design and Construction Interest Group. (2016). *Facility Design and Construction.* IPAC-Canada Position Statement

Facility Guidelines Institute. (2014). *Guidelines for Design and Construction of Health Care Facilities.* American Society for Healthcare Engineering of the American Hospital Association.

Attachments:

ICRA Documentation.pdf

IPAC Site Inspection Report.pdf

SickKids Procedures for Construction, Renovation and Physical Plant Projects 2016.pdf

©The Hospital for Sick Children. All Rights Reserved. This document is specific to SickKids internal activities at the time of printing. SickKids does not accept responsibility for use of this material by any person or organization not associated with SickKids. No part of the document should be used for publication without appropriate acknowledgement.

Appendix C

Contractors – Asbestos Operations

SickKids®

This is a CONTROLLED document for internal use only. Any documents appearing in paper form are not controlled and should be checked against the electronic SharePoint version prior to use.

SickKids	Document Scope: Hospital-wide Administration
	Document Type: Procedure,Guideline Approved on 2022-01-17 Next Review Date: 2023-01-17
	Contractors - Asbestos Operations — Version: 3

1.0 Introduction

Employees of the Hospital for Sick Children will not perform Type 3 Asbestos Operations and will only perform limited Type 1 and Type 2 Asbestos Operations. All other asbestos related work will be performed by qualified contractors and asbestos abatement companies.

This procedure has been developed to address asbestos notification requirements before requesting tender or arranging work and to clarify expectations from contractors who will perform Asbestos Operations at SickKids.

2.0 General Project Requirements:

Any renovation, construction, renewal or modification to the work environments including wiring changes should be vetted through Plant Operations or Facilities Development. Plant Operations and Facilities Development will review the project/work and determine whether there will be any special requirements including asbestos operations.

3.0 Types of contracted work where asbestos is involved:

- Large renovation projects which involve Type 3 Asbestos Operations.
- Type 3 Asbestos Operations abatement projects
- Projects where friable asbestos may be present and potentially disturbed. e.g. work above ceiling tiles where sprayed on asbestos fire proofing is present.
- Asbestos-containing materials (ACM) will be present but no abatement will take place.
- Small asbestos containing material removals e.g. removal of small sections of pipe insulation or asbestos containing fireproofing.

4.0 Responsibilities

Project Lead:

- Ensure that contractors are notified in writing of the presence of asbestos in the area in which they will work. See Asbestos Survey
- Ensure that an Occupational Hygienist, Occupational Health & Safety Services (OHSS) is notified and consulted on the project.
- Ensure that Plant Operations, Facilities Development, are consulted on the project where required.
- Ensure that work was performed to specifications.
- Document that responsibilities above have been performed.
- Where a Consultant is used to develop project plans and draw up tender documents, ensure that the above happens.

Occupational Hygienist, Occupational Health and Safety Services:

- Review and provide advice on project plans for asbestos operations performed by contractors.
- Recommend changes to project plans to increase the safety of building occupants where warranted.

Senior Manager Plant Operations or Director Facilities Development:

- Review and approve submitted work plans for asbestos operations performed by contractors.
- Provide hiring instructions to Project Lead or department hiring contractor.

©The Hospital for Sick Children. All Rights Reserved. This document is specific to SickKids internal activities at the time of printing. SickKids does not accept responsibility for use of this material by any person or organization not associated with SickKids. No part of the document should be used for publication without appropriate acknowledgement.

This is a CONTROLLED document for internal use only. Any documents appearing in paper form are not controlled and should be checked against the electronic SharePoint version prior to use.

All contractors and sub-contractors:
- Meet or exceed the requirements of O. Reg. 278/05 Designated Substance- Asbestos on Construction Projects and in Building and Repair Operations.
- Meet or exceed the requirements of SickKids' Asbestos Management Program and Asbestos Procedures

Third-Party Asbestos Consultant or Plant Operations staff:
- Verify that work was performed in compliance with the legislation.
- Provide documentation to SickKids and the contractor on the above requirements
- Submit a completed plan for the Asbestos Survey with detailed information of the asbestos removed, as well as information on all remaining asbestos containing material.

5.0 Contractor Expectations

5.1 Asbestos Abatement Contractors:

In addition to meeting the basic requirements for contracts as stipulated by Patient and Support Services, Purchasing and Corporate Ventures, Asbestos Abatement Contractors must:
- Provide statements of experience of principals and key individuals of this organization.
  Note:
  All supervisory staff working at SickKids must have a minimum of 3 years prior experience in the field of asbestos control and remediation and have supervisory experience with a minimum of 5 projects of similar size.
- Provide proper certificates of training for all individuals including the supervisor who will work on asbestos projects and all staff who will potentially work at SickKids. The required training is the Asbestos Abatement Worker Training Program approved by the Ministry of Training, Colleges and Universities.
- Provide proof that all employees are medically fit to don a respirator and have been fit tested for the class of respiratory protection for each type of asbestos work within the last 2 years.
- Have a proven track record that can be supported by good references.

5.1.1 **Additional Requirements**

Asbestos Abatement Contractors will:
- Work in compliance with the legislation.
- Provide any required notification to the Ministry of Labour i.e. submit the Notice of Project.
- Utilize the suggestions given by the 3rd party asbestos consultants to ensure compliance (if used).
- Ensure that all negative air units that will be used will be leak tested at the project site by qualified individuals.
- Ensure that work areas after completion of type 1 and type 2 asbestos operations are clean and free of loose asbestos fibres and all exposed asbestos is covered and sealed.
- Mark perimeter of any remaining asbestos-containing material **red.**
- Colour any new non asbestos fireproofing or insulation **blue** for easy recognition.

5.2 Contractors or subcontractors that will have to work where asbestos is present and may be disturbed:

In addition to meeting the basic requirements for contracts as stipulated by Patient and Support Services, Purchasing and Corporate Ventures, asbestos abatement contractors must:
- Provide statements of experience for principals and key individuals who will work at SickKids
- Provide certificates of training on asbestos procedures appropriate for the level of work they will be doing.
  Training content should at least include;
  - the hazards of asbestos exposure

©The Hospital for Sick Children. All Rights Reserved. This document is specific to SickKids internal activities at the time of printing. SickKids does not accept responsibility for use of this material by any person or organization not associated with SickKids. No part of the document should be used for publication without appropriate acknowledgement.

- personal hygiene and work practices
- the use, cleaning and disposal of respirators and protective clothing

- Provide proof that all employees are medically fit to don a respirator and have been fit tested for the class of respiratory protection for the type of asbestos work within the last 2 years.
- Have a proven track record that can be supported by good references.

5.3 Asbestos Consultants/Inspectors:

In addition to meeting the basic requirements for contracts as stipulated by Patient and Support Services, Purchasing and Corporate Ventures, contractors selected must:

- Provide documentation that employees have successfully completed Asbestos Abatement Worker Training Program approved by the Ministry of Training, Colleges and Universities.
- Be knowledgeable of the Occupational Health and Safety Act and the Regulations made under it.
- Provide statements of experience for principals and key individuals performing inspection of asbestos work.
- Have an excellent track record that can be supported by references.

5.3.1 Consulting during project planning:

Asbestos Consultants may be asked to participate in the planning stage of asbestos removal projects. They may also be asked to provide specifications for the tender documents for construction projects.
It is SickKids expectations that the consultant will ensure that all legal requirements are met and that the health and safety of asbestos abatement contractors and SickKids staff, patients and visitors are considered when developing specifications.

5.3.2 Monitoring Asbestos Projects

The minimum requirements for inspections and air monitoring for Type 3 Operations is outlined in O.Reg. 278/05.
At SickKids it is expected that consultants will minimally:

- Conduct a thorough inspection of the work site enclosure, and decontamination facility prior to the start of any contaminated work to ensure it meets or exceeds the regulation requirements. This also includes a background air sample.
- Conduct daily monitoring during contaminated work, both inside and outside the enclosure. Sampling should be conducted as described in the legislation
- Conduct daily inspections of the work site (during contaminated work). This includes that:
  - the enclosures are in good condition
  - the negative air is adequate (0.02 inches of water, relative to the outside environment.) and has been leak tested on site
  - proper work practices are carried out as required
  - appropriate PPE is used correctly
  - electrical safety is maintained

  If any of these conditions are not met, the Asbestos Consultant may stop work until the repairs or modifications are complete.
- Provide the Project lead/Constructor and an Occupational Hygienist with the daily reports with deficiencies cleared highlighted before the start of the next workday.
- Upon completion of the work and cleaning, but before the barriers, enclosures decontamination facility are dismantled, conduct a visual inspection to ensure that the enclosure and work area inside the enclosure are free from visible dust, debris or residue that may contain asbestos.
- If visual inspection indicates proper cleaning and removal, conduct air clearance testing as outlined in O.Reg. 278/05.

©The Hospital for Sick Children. All Rights Reserved. This document is specific to SickKids internal activities at the time of printing. SickKids does not accept responsibility for use of this material by any person or organization not associated with SickKids. No part of the document should be used for publication without appropriate acknowledgement.

- If the clearance test fails, the consultant will provide guidance to the Abatement Contractor on the corrections/re-cleaning required to achieve compliance.
- If both visual inspection and air clearance pass, the consultant will provide a clearance report to the Project Lead/Constructor and Occupational Health and Safety Services.

5.3.3 Final report

Upon completion of the asbestos removal the Consultant will provide a final report that will:

- Identify the extent of the asbestos removals - boundaries where is has been removed.
- Identify any remaining ACM, friable and non- friable.

This report will be used to maintain and update the Asbestos Survey.

6.0 Major Construction Projects (Asbestos Abatement Type 3 Operations and/or Type 2 Operations)

6.1 With large construction projects often external consultants are retained. e.g. architectural/engineering firms to design the work and develop the project plan.
All Type 3 Asbestos Operations require the use of a 3rd party asbestos consultant to oversee compliance with the legislation, e.g. proper containment set-up, maintenance of negative air, final visual inspection and air clearance.

6.2 Procedure:
Project Lead:

Important Steps	Key points
1. Involve all key parties including an occupational hygienist from Occupational Health and Safety Services at the planning phase of the project.	Key parties may include but are not limited to, Plant Operations, department for whom the work is conducted, Protection Services, Information Services, Infection Prevention and Control. If Consultants are retained to plan the project the Project Lead will liaise with the consultant to ensure that all legal requirements are met and to provide any information required by the consultant.
2. Include requirements identified by the key parties into the project plan.	
3. If Type 3 Asbestos operations are required as part of the project, contract the services of a 3rd party asbestos consultant(s) to monitor legal compliance and quality of the project.	The asbestos consultant may provide useful information to input into the project plan. They may also assist in the next step if an examination is required.
4. Prior to tendering or arranging work ensure that the proposed work site is checked for presence of asbestos in the work area.	Refer to: Asbestos Survey If warranted have an examination carried out to establish whether any material that is likely to be handled, dealt with, disturbed or removed, whether friable or non-friable, is asbestos containing material. An examination will be required if there is any reason to

©The Hospital for Sick Children. All Rights Reserved. This document is specific to SickKids internal activities at the time of printing. SickKids does not accept responsibility for use of this material by any person or organization not associated with SickKids. No part of the document should be used for publication without appropriate acknowledgement.

This is a CONTROLLED document for internal use only. Any documents appearing in paper form are not controlled and should be checked against the electronic SharePoint version prior to use.

Important Steps	Key points
	believe that there is material that has not been properly assessed for asbestos content. It very is important to make sure that all ACM is identified in the report given to the prospective contractors. See Sect. 9.0 **Discovery of Materials not previously identified as asbestos.** On large projects this may be arranged for by the Architectural/Engineering Consultant.
5. Ensure that a report is provided to any prospective constructor, contractor and or subcontractor: • Stating whether there is or is not asbestos materials involved in the project and the type of asbestos • Describing the condition of the material whether it is friable or non-friable • Containing drawings, plans and specifications to show the location of the asbestos containing material	
6. Put project out to tender to qualified contractors.	See selection criteria for qualified contractors. A pre-qualified list of contractors can be developed. However all the pre-qualified contractors must comply with the criteria set out in Section 5.
7. Follow SickKids' contractor hiring/tendering procedures.	
8. Award project to the qualifying contractor(s).	Depending on the scope of the work there may be a requirement to have both asbestos abatement contractors as well as other contractors e.g. electrical contractors who will have to perform work under Asbestos operations Asbestos abatement contractors must comply with Section 5.1. Other contractors who will have to work in areas with asbestos must comply with section 5.2 Retain selection supporting documents with the information provided to contractor.
9. If the contractor becomes the Constructor of the project the Project Lead will liaise with the Constructor.	The constructor will be responsible for notification of the project to the Ministry of Labour as described on O. Reg. 278/05
Type 3 Asbestos Abatement	
10. Once abatement starts, review daily inspection reports provided by the Asbestos Consultant. Provide copies of the reports to a SickKids Occupational Hygienist.	Asbestos consultant will monitor the asbestos abatement project for compliance with the legislation See section 5.3 They will notify the Abatement Contractors and the Project Lead of any deficiencies.

©The Hospital for Sick Children. All Rights Reserved. This document is specific to SickKids internal activities at the time of printing. SickKids does not accept responsibility for use of this material by any person or organization not associated with SickKids. No part of the document should be used for publication without appropriate acknowledgement.

Important Steps	Key points
	It will be the responsibility of the Abatement contractor to correct any deficiencies identified.
11. When the asbestos removal component of the project is completed and full clearance has been achieved: • Receive the Clearance Report from the consultant. Within 24 hrs: • Post a copy of the report in a conspicuous place or common area • Provide a copy of the report to the Occupational Hygienist	The Asbestos consultant will verify that the abatement has been successfully completed and that the area has passed clearance testing. The occupational hygienist will ensure that the JOHSC will receive a copy of the clearance report. The report should also be made available to any contractors, sub-contractors who will be working in the cleared area.
12. Retain all documents provided by third-party consultant(s) and forward to Facilities System Operator	The Facilities System Operator will: • incorporate the details of the asbestos removal into the Asbestos Survey • retain clearance reports for at least one year after receiving them
Type 1 and Type 2 asbestos procedures	On a large construction projects is possible that there may be jobs that will require asbestos work but will not involve major removals. These will require type 1 or type 2 asbestos operations
13. Ensure that the contractors used to do these procedures comply with section 4.2	The constructor will be responsible for hiring subcontractors that comply with Section 5.2. and for monitoring that the sub-contractors comply with the legislative requirements
14. Ensure that all minor removals are documented and forward documents to the Facilities System Operator	• The constructor will be responsible for providing details of any minor removals • Facilities System Operator will file information and update the Asbestos Survey

7.0 Type 3 Asbestos Abatement Operations

As with projects where asbestos removal is a component of the project a 3rd party Asbestos consultant must be retained to monitor the operation.

7.1 Procedure:
Project lead:

Important Steps	Key points
1. Determine the scope of the removal.	Identify what is to be removed and the locations it will be removed from. Also identify who will be affected by the removal.

©The Hospital for Sick Children. All Rights Reserved. This document is specific to SickKids internal activities at the time of printing. SickKids does not accept responsibility for use of this material by any person or organization not associated with SickKids. No part of the document should be used for publication without appropriate acknowledgement.

This is a CONTROLLED document for internal use only. Any documents appearing in paper form are not controlled and should be checked against the electronic SharePoint version prior to use.

Important Steps	Key points
3. Consult with a SickKids occupational hygienist about the proposed project.	
4. Contract the services of a 3rd party asbestos consultant(s) to monitor legal compliance and quality of the project.	The asbestos consultant may provide useful information to input into the project plan. They may also assist in the next step if an examination is required.
5. Prior to tendering or arranging work ensure that a report is provided to any prospective constructor, contractor and or subcontractor: • stating where the asbestos materials are • describing the condition of the material whether it is friable or non-friable • containing drawings, plans and specifications to show the location of the asbestos containing material	Refer to: Asbestos Survey If warranted have an examination carried out to establish whether any material that is likely to be handled, dealt with, disturbed or removed, whether friable or non-friable is asbestos containing material.. An examination will be required if there is any reason to believe that there is material that has not been properly assessed for asbestos content.
6. Award project to a qualified asbestos abatement contractor.	Ensure that all SickKids requirements are met when selecting a contractor. See section 5.1
7. Notify all occupants near the work area of the asbestos project.	
8. Once work starts, review daily inspection reports provided by the Asbestos Consultant. Provide copies of the reports to a SickKids' Occupational Hygienist.	Asbestos consultant will monitor the asbestos abatement project for compliance with the legislation See section 5.3
9. When the asbestos removal is completed and full clearance has been achieved: • Receive the Clearance Report from the consultant. Within 24 hours: • Post a copy of the report in a conspicuous place or common area • Provide a copy of the report of the Occupational Hygienist	• The Asbestos consultant will verify that the abatement has been successfully completed and that the area has passed clearance testing. • The occupational hygienist will ensure that the JOHSC will receive a copy of the clearance report.
10. Retain all documents provided by third-party consultant(s) and forward to the Facilities System Operator.	The Facilities System Operator will: • incorporate the details of the asbestos removal into the Asbestos Survey • retain clearance reports for at least one year after receiving them

©The Hospital for Sick Children. All Rights Reserved. This document is specific to SickKids internal activities at the time of printing. SickKids does not accept responsibility for use of this material by any person or organization not associated with SickKids. No part of the document should be used for publication without appropriate acknowledgement.

8.0 Contractor Work Where Friable Asbestos Containing Materials are Present and Likely to be Disturbed.

Any contractor work that requires access above ceiling tiles or into mechanical spaces must be first reviewed by Plant Operations. There is the potential that the work will be in an area where friable asbestos is present and may require that work be done following the requirements for Type 2 asbestos operations.
This does not apply to work that is part of a construction project where the Constructor is someone other than SickKids.

8.1 Procedure

Project Lead or department hiring contractor:

Important steps	Key points
1.Consult with Plant Operations to determine if there is ACM in any areas where the work will be conducted.	Plant Operations will refer to the Asbestos Survey to determine if asbestos is present.
2.If ACM is present consult with Plant Operations and an Occupational Hygienist from Occupational Health and Safety Services to develop the project plan.	Project plans must include where all asbestos-containing materials are in the area where the project will occur as well as the scope of work that will involve interacting with asbestos-containing material.
3.Prior to tendering or arranging work ensure that a report is provided to any prospective constructor, contractor and or subcontractor: • stating where the asbestos materials are • describing the condition of the material whether it is friable or non-friable • containing drawings, plans and specifications to show the location of the asbestos containing material	If warranted, have an examination carried out to establish whether any material that is likely to be handled, dealt with, disturbed or removed, whether friable or non-friable is ACM. An examination will be required if there is any reason to believe that there is material that has not been properly assessed for asbestos content.
4.Award project only to a contractor that has asbestos trained personnel and meets the requirements in section 5.2	
5.Appoint competent Plant Operations staff to monitor compliance with asbestos procedures	Plant Operations qualified staff will periodically check on the progress of the work and verify that legislative requirements are met and document this information
6.Terminate contractor service or restrict contractor personnel if asbestos operations compliance is not met.	SickKids reserves the right to terminate contractor work if asbestos work requirements are not met. Alternately contractor staff who do not comply with the work requirements will be banned from working at SickKids.
7.When project is completed maintain monitoring records for a least a year	

©The Hospital for Sick Children. All Rights Reserved. This document is specific to SickKids internal activities at the time of printing. SickKids does not accept responsibility for use of this material by any person or organization not associated with SickKids. No part of the document should be used for publication without appropriate acknowledgement.

This is a CONTROLLED document for internal use only. Any documents appearing in paper form are not controlled and should be checked against the electronic SharePoint version prior to use.

9.0 Unexpected Discovery of Material Not Previously Identified as ACM

During any contracted project or work if any material that had not been previously identified as ACM in the Asbestos Survey is discovered the constructor of the project (if not SickKids) or the employer are **required** to do the following: Immediately notify, orally and in writing:

- an inspector at the office of the Ministry of Labour
- SickKids
- the contractor (if the any)
- the Joint Health and Safety Committee of the workplace.

Project Lead
- If the above happens notify an Occupational Hygienist of this discovery ASAP

Occupational Hygienist
Upon notification of the discovery:
- Liaise with the Ministry of Labour
- Notify SickKids' JOHSC.

10.0 References

Ontario Regulation 278/05: Designated Substance - Asbestos on Construction Projects and in Buildings and Repair Operations
Ontario Regulation 347: General Waste-Management
Ontario Regulation 837: Designated Substance Asbestos
Transportation of Dangerous Goods Act

©The Hospital for Sick Children. All Rights Reserved. This document is specific to SickKids internal activities at the time of printing. SickKids does not accept responsibility for use of this material by any person or organization not associated with SickKids. No part of the document should be used for publication without appropriate acknowledgement.

Appendix D1

Staff Immunization and Surveillance Policy

SickKids®

Staff Immunization & Surveillance

This is a CONTROLLED document for internal use only, valid only if accessed from the Policies and Procedures site.

Original Date of Issue: October 16, 2003

1.0 Introduction

The purpose of this policy is to identify communicable disease surveillance requirements for The Hospital for Sick Children (SickKids) staff and other persons carrying out work activities on hospital premises, to;

- Limit the risks of exposure and transmission of communicable disease for staff and patients, and
- Promote compliance with the Hospital for Sick Children's obligations under the Ontario **Public Hospitals Act, Regulation 96; Section 4.**

Immunization and surveillance requirements will be based on the epidemiology of and prevention strategies for communicable diseases known to be transmitted in health care settings, and on the protocols developed jointly by the Ontario Hospital Association (OHA) and the Ontario Medical Association (OMA) and the College of Physicians and Surgeons of Ontario (CPSO). Policy requirements will be amended as required by legislation or indicated by emerging scientific data and recommended practice.

This policy currently defines staff immunization and surveillance requirements for rubella, varicella, measles, mumps, tuberculosis, and blood-borne pathogens. Influenza vaccination, strongly recommended for all staff annually, is addressed by the Influenza Protection policy.

2.0 Policy

2.1 All staff must comply with immunization and communicable disease surveillance requirements, based on the work performed and the potential for exposure. All staff at SickKids are required, as a condition of employment/placement to:

- provide acceptable proof of immunity against COVID-19, Measles, Mumps, Rubella, and Varicella (Chicken Pox)
- provide documentation of Hepatitis B immune status
- provide documentation of most recent tetanus/diphtheria/pertussis immunization
- provide acceptable proof of TB surveillance
- agree to undergo post-exposure evaluation as necessary

In addition to the requirements in 2.1, staff having patient contact, or otherwise meeting the criteria for exposure category **A**, must also:

2.2 Undergo TB surveillance annually, as a minimum, and more frequently as risk of exposure to positive TB cases necessitates.

2.3 Exemptions to this policy for medical and non-medical reasons will be assessed on a case-by-case basis, having regard to potential risks to the individual and to patients; whether risks can be mitigated to an acceptable level; and options available in the event of an outbreak or exposure.

©The Hospital for Sick Children ("SickKids"). All Rights Reserved. This document was developed solely for use at SickKids. SickKids accepts no responsibility for use of this material by any person or organization not associated with SickKids. A printed copy of this document may not reflect the current, electronic version on the SickKids Intranet. Use of this document in any setting must be subject to the professional judgment of the user. No part of the document should be used for publication without prior written consent of SickKids.

2.4 Refusal to comply with this policy may lead to interruption of employment including, but not limited to, layoff without pay and termination for employees; suspension of privileges for physicians; and exclusion from carrying out work activities on hospital premises for all other staff.

3.0 Definitions

For the purposes of this policy:

Staff are defined as physicians, dentists, scientists, volunteers, students, independent contract workers, observers and/or other individuals carrying out work activities on hospital premises.

Visitors: Persons visiting the hospital but not required to work on hospital premises. Please see Family presence and patient visiting.

Hospital for Sick Children Sponsor: The area responsible for giving students or other individuals the opportunity to work at SickKids.

4.0 General Principles

Exposure Categories
All staff will be assigned to an exposure category, based on their work activities. The exposure categories are defined as follows:

Exposure Category A: Staff responsible for patient care or other work activities with the potential for staff exposure to infectious materials including:

- Human blood/body fluids
- Medical supplies & equipment contaminated with high-risk materials
- Environmental surfaces contaminated with high-risk materials
- Air contaminated with high-risk materials

Exposure Category B: Staff whose work activities do not include patient care and involve minimal risk of exposure to infectious materials.

Exposure Category C: Staff whose work includes exposure prone procedures as defined by the CPSO.

Immunization and communicable disease surveillance requirements for staff are based on the work performed and the potential for exposure. Exposure categories, together with the categories to which specific job classifications are assigned, are defined above and in **7.0, Table 1.** Where no assignment has been made, the hiring manager/SickKids sponsor will determine the appropriate exposure category based on the work. Surveillance and immunization requirements for each category are summarized in **7.0, Table 1.**

Section **6.0 Procedures**, below, contains the immunization forms that all staff will be required to complete, together with instructions outlining what constitutes acceptable proof of compliance.

All medical documentation required under this policy is to be submitted directly to Occupational Health & Safety Services (OHSS); such documentation will be kept confidential, as outlined in Electronic Employee Files. Reports confirming only compliance or noncompliance with policy requirements will be provided to management. Staff granted an exemption will be reported as compliant.
Ongoing TB surveillance will be available to staff through Occupational Health & Safety Services and every effort will be made to facilitate access for staff to surveillance testing. OHSS will make copies of individual immunization records available to staff on request.

©The Hospital for Sick Children ("SickKids"). All Rights Reserved. This document was developed solely for use at SickKids. SickKids accepts no responsibility for use of this material by any person or organization not associated with SickKids. A printed copy of this document may not reflect the current, electronic version on the SickKids Intranet. Use of this document in any setting must be subject to the professional judgment of the user. No part of the document should be used for publication without prior written consent of SickKids.

5.0 Surveillance requirements

5.1 Tuberculosis (TB)

5.1.1 Annual Tuberculosis (TB) Surveillance Requirements

For staff with a previous negative 2-step TST (Tuberculin skin test)
A one-step TST.

For staff with a documented positive TST
No annual surveillance is required, for individuals with a documented positive TST.

5.1.2 Post-Exposure Tuberculosis (TB Follow-up)

Assuming full compliance with the provisions of this policy, the most significant post-exposure follow-up will relate to potential exposures to **mycobacterium tuberculosis**. Staff identified as having been potentially exposed to TB within SickKids will be screened by Occupational Health. The evaluation will include an assessment of exposure, review of previous TB screening, administration of appropriate surveillance, which would include a skin test if previous results negative, or review of reporting of signs and symptoms if previous results positive, and other health monitoring or medical referral as appropriate. The Occupational Health Manager or designate will report cases of conversion to the Medical Officer of Health and when occupationally acquired to the Ministry of Labour and WSIB as required by current legislation.

5.2 Other Disease Exposures

Staff exposures will be reviewed by Occupational Health. Should a staff member who has been granted an exemption from the immunization requirements of this policy be at risk because of a workplace exposure to measles, rubella, mumps or varicella (chicken pox), individual follow-up will be undertaken by Occupational Health, and appropriate action initiated. Occupationally acquired disease will be reported by the Occupational Health Manager or designate to the Medical Officer of Health, Ministry of Labour and WSIB as required by current legislation.

5.3 Staff in Exposure Category C

Staff in this category who test positive for HIV, HBV and/or HCV are obligated to report their status to the CPSO and the Chief of Perioperative Services. Seropositive physicians will be provided with support for their personal health issues. Any implications regarding seropositive physician's clinical activity will be determined in collaboration with the expert panel of the CPSO.

6.0 Procedures

In recognition of the various groups of staff who work at SickKids, separate procedures have been developed for each group. Please ensure that you follow the correct procedure for the staff person you are hiring or 'sponsoring'.

6.1 New Staff

©The Hospital for Sick Children ("SickKids"). All Rights Reserved. This document was developed solely for use at SickKids. SickKids accepts no responsibility for use of this material by any person or organization not associated with SickKids. A printed copy of this document may not reflect the current, electronic version on the SickKids Intranet. Use of this document in any setting must be subject to the professional judgment of the user. No part of the document should be used for publication without prior written consent of SickKids.

6.1.1 Payroll, Staff Physicians and Research Institute (includes all staff on the SickKids payroll and those who will work in the Research Institute)

- Hiring manager/SickKids sponsor includes immunization requirements and forms with the offer letter. Approximately 2 to 4 weeks may be required for completion of the immunization form. TB testing should be completed no sooner than 4 weeks before the start date. Staff are responsible for any costs associated with completion of the form.
- New staff must have completed the **Immunization Record - Payroll, Physicians & Research Institute Staff** and provide to Occupational Health within 2 weeks of their start date
- This immunization help guide may assist to meet immunization requirements.
-
- New hires are expected to present the original record at their scheduled Occupational Health orientation visit. New hires are responsible for keeping a photocopy for their records.
- Notices are sent to the hiring manager to initiate a progressive consequence process up to and including suspension at 15 days (2 weeks) post hire date and termination at 30 days (4 weeks) post hire date should new hires remain non-compliant with the requirements.
- Hiring managers, or their designates, are responsible for ensuring that their new staff are compliant.

6.1.2 Non-Payroll Staff on site for 5 days or more (includes students on placement, staff of commercial enterprises, temporary agency placements, observers, and contractors/consultants working in the main campus (Annex, Atrium and 555 University Ave)

- Hiring manager/SickKids sponsor advises staff of immunization requirements and provides copy of the instruction sheet for non-payroll staff and the Health Care Provider Certification form. Note that approximately 2- 4 weeks may be required for completion of the form.
- This immunization help guide may assist to meet immunization requirements
- This group is not required to present themselves to the Occupational Health Clinic.
- All Non-Payroll Staff are responsible for keeping a photocopy for their records.
- For contractors/consultants on-site for more than 5 days but NOT working in the main campus, written confirmation from the hiring manager/SickKids sponsor that the individual will not be required to work in the main campus is required for a badge to be issued.
- In the case of a communicable disease exposure or outbreak, Occupational Health will request a copy of the completed Healthcare Provider form.
- Staff are responsible for any costs associated with completion of the form.
- Directors or their designates, are responsible for ensuring that their new staff are compliant.

6.1.3 Volunteers & Women's Auxiliary

- Advise new volunteers/women's auxiliary of the immunization requirements and provide a copy of the instruction sheet for non-payroll staff and the Health Care Provider Certification form.
- This immunization help guide may assist to meet immunization requirements
- The completed record must be on file in Volunteer Services/Women's Auxiliary before the volunteer's start date.
- Volunteers are responsible for any costs associated with completion of the form.
- Directors or their designates, are responsible for ensuring that their new volunteers are compliant.

6.1.4 University of Toronto Medical Students, Residents and Fellows

- Primary responsibility for compliance resides with the University of Toronto; compliance is confirmed as part of the university registration process.
- University of Toronto medical students, residents, and fellows on placement at SickKids must read our immunization notice before being issued a photo identification badge.

6.1.5 Medical Observers & Visiting Physicians on-site for 5 days or more

©The Hospital for Sick Children ("SickKids"). All Rights Reserved. This document was developed solely for use at SickKids. SickKids accepts no responsibility for use of this material by any person or organization not associated with SickKids. A printed copy of this document may not reflect the current, electronic version on the SickKids Intranet. Use of this document in any setting must be subject to the professional judgment of the user. No part of the document should be used for publication without prior written consent of SickKids.

- The Medical Credentials Office advises physicians of immunization requirements and provides a copy of the instruction sheet and Immunization Record: Medical Observers & Visiting Physicians to be completed and returned to the medical credential's office.
- In the case of a communicable disease exposure or outbreak, Occupational Health will request a copy of the completed immunization record.

6.1.6 Persons carrying out work activities who do not meet any of the criteria above (i.e., on site for 5 days or less, contractors not required to work in the main campus)

- Follow the provisions of the Tours, Visitors and Events Policy.
- Strictly adhere to self-screening protocols and do not work on hospital premises when suffering respiratory or gastrointestinal symptoms/illness.

6.2 Current Staff

6.2.1 Tuberculosis Surveillance

- All staff in Exposure Category A must ensure that they meet annual TB surveillance requirements, outlined in section 5.0 above.
- Wherever feasible, annual TB surveillance is linked to established annual re-appointment/credentialing processes.

6.2.2 Post-exposure Surveillance

- All staff must comply with post-exposure surveillance as outlined in 5.0 above.

6.3 Compliance Tracking

- Managers can review the compliance status of their staff, using the myBI report titled **Staff Immunization and TB Compliance.**
- Occupational Health & Safety Services provides an annual SickKids compliance report to Hospital Quality & Risk Management Committee

6.4 Requests for Exemptions to Policy Provisions

Requests for exemptions from this policy should be directed to the Senior Manager of Occupational Health. Such requests are reviewed by Occupational Health, in consultation with such other parties as may be appropriate depending on the nature of the exemption requested. Consultation partners may include the Occupational Health Medical consultant, Infection Prevention & Control, Human Resources, Infectious Diseases and the hiring manager/SickKids sponsor.

Every effort is made to protect confidentiality in relation to exemptions, i.e. an individual requesting an exemption from Rubella vaccination because of child-bearing plans/status would be registered as compliant on all management reports; occupational health records would indicate an exemption status, to allow appropriate follow-up in the event of a workplace exposure.

7.0 Exposure Table

Table 1: Staff Communicable Disease Immunization and Surveillance Requirements
*Staff is defined as all employees, physicians, dentists, scientists, students, volunteers, independent contract workers and observers. Where no exposure category has been assigned, the hiring manager/Sick Kids program sponsor is responsible for assigning the most appropriate category and communicating the consequent policy requirements.

©The Hospital for Sick Children ("SickKids"). All Rights Reserved. This document was developed solely for use at SickKids. SickKids accepts no responsibility for use of this material by any person or organization not associated with SickKids. A printed copy of this document may not reflect the current, electronic version on the SickKids Intranet. Use of this document in any setting must be subject to the professional judgment of the user. No part of the document should be used for publication without prior written consent of SickKids.

Exposure Category A	Staff Assigned to Category	Surveillance and Immunization Requirements
Potential exposure to infectious materials including: • Human blood/body fluids • Medical supplies & equipment contaminated with high risk material • Environmental surfaces contaminated with high risk material • Air contaminated with high risk material	All staff responsible for patient care or other work activities with the potential for exposure to infectious materials in category A, including: • Nursing staff • Medical staff • House staff • Diagnostic laboratory staff • Research Institute staff (working with infectious materials of concern) • Pathology/autopsy staff • Protection Services • Housekeeping • Central Services • Dental staff • Patient Service Aides • Health care professionals, including occupational therapists, physiotherapists, respiratory therapists • Child Life Specialists • Professional visitors who meet these exposure criteria • Physicians granted temporary privileges • Pharmacists, Pharmacy Technicians • Bioengineering • Plant Operations & Engineers • Patient Information Clerks • Social Workers & Chaplains • Nutrition and Food Services • Volunteers • Women's Auxiliary • Franchise staff • Students who meet these exposure criteria • Information Services staff who meet these exposure criteria	• COVID-19 • Measles • Mumps • Rubella • Varicella (chicken pox), • Baseline TB screening **All of the above requirements must be met at the time of onboarding** • Annual TB screening • Hepatitis B (documentation of immune status) • Post-exposure follow-up, as indicated • Annual influenza immunization (strongly recommended) • Tetanus/Diphtheria/Pertussis immunization (strongly recommended)

Exposure Category B	Staff Assigned to Category	Surveillance & Immunization Requirements
No patient care activities and minimal risk of exposure to infectious materials.	• Finance • Human Resources • Administrative staff • Temporary staff (when work term is more than 4 weeks; for shorter terms, advise of policy & recommend compliance)	• COVID-19 • Measles • Mumps • Rubella • Varicella • Baseline TB screening

©The Hospital for Sick Children ("SickKids"). All Rights Reserved. This document was developed solely for use at SickKids. SickKids accepts no responsibility for use of this material by any person or organization not associated with SickKids. A printed copy of this document may not reflect the current, electronic version on the SickKids Intranet. Use of this document in any setting must be subject to the professional judgment of the user. No part of the document should be used for publication without prior written consent of SickKids.

	• Independent contractors • Students/Observers who meet these exposure criteria on site for 1 week or more • Research Institute staff except those meeting criteria for exposure category A • Information Services staff except those meeting criteria for exposure category A	**All of the above requirements must be met at the time of onboarding** • Post-exposure follow-up, as indicated • Annual influenza (strongly recommended)
Exposure Category C	**Staff Assigned to Category (possible examples)**	**Surveillance & Immunization Requirements**
Perform exposure prone procedures	• Dentists • Oral Surgeons • Orthodontists • Surgeons • Emergency Room Physicians	• COVID-19 • Measles • Mumps • Rubella • Varicella (chicken pox), • Baseline TB screening **All of the above requirements must be met at the time of onboarding** • Annual TB screening • Hepatitis B (documentation of immune status) • Post-exposure follow-up, as indicated • Annual influenza (strongly recommended) • HBV (annually, unless immunity has already been confirmed) • HCV (every 3 years) • HIV (every 3 years)

8.0 Related Documents

COVID-19 Vaccination
Family presence and patient Visiting
Influenza Protection policy

9.0 References

Communicable Diseases Surveillance Protocols developed jointly by the Ontario Hospital Association (OHA) and the Ontario Medical Association (OMA) and approved by the Minister of Health in keeping with Regulation 965, Section 4 under the Public Hospital's Act, 1996.

Occupational Health and Safety Act, Ontario, Part III, Duties of Employers and Other Persons

Guideline for Infection Control in Health Care Personnel, Centers for Disease Control and Prevention Public Health Service, Hospital Infection Control Practices Advisory Committee, 1998.

©The Hospital for Sick Children ("SickKids"). All Rights Reserved. This document was developed solely for use at SickKids. SickKids accepts no responsibility for use of this material by any person or organization not associated with SickKids. A printed copy of this document may not reflect the current, electronic version on the SickKids Intranet. Use of this document in any setting must be subject to the professional judgment of the user. No part of the document should be used for publication without prior written consent of SickKids.

Attachments:

Healthcare Provider Form 2023

Immunization Help Guide 2023.pdf

Immunization Record - Medical Observers Visiting Scientists 2023.pdf

Immunization Record - Payroll Physicians and Research Staff 2023.pdf

©The Hospital for Sick Children ("SickKids"). All Rights Reserved. This document was developed solely for use at SickKids. SickKids accepts no responsibility for use of this material by any person or organization not associated with SickKids. A printed copy of this document may not reflect the current, electronic version on the SickKids Intranet. Use of this document in any setting must be subject to the professional judgment of the user. No part of the document should be used for publication without prior written consent of SickKids.

Appendix D2

COVID-19 Vaccine Policy

SickKids®

This is a CONTROLLED document for internal use only. Any documents appearing in paper form are not controlled and should be checked against the electronic SharePoint version prior to use.

SickKids	Document Scope: Hospital-wide Administration	
	Document Type: Policy Approved on 2022-06-07 Next Review Date: 2023-06-07	
	COVID-19 Vaccination	Version: 4

1.0 Introduction

COVID-19 is a respiratory disease caused by a newly discovered coronavirus (SARS-CoV-2) that was first identified in December 2019. COVID-19 can be transmitted at short-range through large respiratory droplets and smaller respiratory droplets known as aerosols. Long-range transmission through aerosols can occur under specific circumstances, particularly crowded or closed spaces with poor ventilation. Symptoms usually begin within two to 14 days of exposure to the virus. A person infected with SARS-CoV-2 is usually considered infectious 48 hours prior to their onset of symptoms until 10 to 20 days after their onset of symptoms, depending on the severity of their illness and their immune system.

Multiple variants (genetic mutations in the SARS-CoV-2 virus) have been identified and some of these variants are known to be more easily transmitted. Ongoing monitoring of the characteristics of current and future variants will take place to identify the need for policy or practice changes.

Although COVID-19 can affect anyone, certain populations are at increased risk for more serious illness, due to pre-existing medical conditions or compromised immune systems. This is particularly true for the patient population at The Hospital for Sick Children ("SickKids" or "Hospital"), which has a higher proportion of infants, children and youth with pre-existing medical conditions and/or compromised immune systems than in the general population. Furthermore, those who work in health-care settings may be at greater risk of exposure to COVID-19 if protective measures are not followed because of the nature of their work. The COVID-19 pandemic has had significant operational challenges on SickKids, as well as social and economic impacts and causing morbidity and mortality around the world.

Vaccination is one of the most effective ways to reduce transmission along with other public health measures. Currently, there are six authorized vaccines in Canada: Pfizer BioNTech COVID-19 vaccine, Moderna COVID-19 vaccine, AstraZeneca COVID-19 vaccine, Johnson & Johnson (Janssen) COVID-19 vaccine, Novavax Nuvaxovid COVID-19 vaccine, and Medicago Covifenz COVID-19 vaccine. All COVID-19 vaccines have been shown to be safe and efficacious against symptomatic laboratory-confirmed COVID-19 in clinical trials. Furthermore, all the authorized COVID-19 vaccines in Canada have been shown to be effective in preventing hospitalization.

2.0 Definitions

Creed - is interpreted to mean "religious creed" or "religion". It is defined as a professed system and confession of faith, including both beliefs and observances or worship. A belief in a God or gods, or a single supreme being or deity is not a requisite. Not all beliefs amount to creed under the Code. A Policy Statement released by the Ontario Human Rights Commission on September 22, 2021 confirms that while the Code prohibits discrimination based on creed, personal preferences or singular beliefs do not amount to a creed for the purposes of the Code.

Fully Vaccinated –Currently someone is considered **fully vaccinated 14 days after** they have received:

©The Hospital for Sick Children. All Rights Reserved. This document is specific to SickKids internal activities at the time of printing. SickKids does not accept responsibility for use of this material by any person or organization not associated with SickKids. No part of the document should be used for publication without appropriate acknowledgement.

- the full primary series of a COVID-19 vaccine authorized by Health Canada, or any combination of such vaccines (currently this is two doses of Moderna, Pfizer-BioNTech, Novavax, Medicago, AstraZeneca, including COVISHIELD) in any combination or one dose of Janssen (Johnson & Johnson); or a full or partial primary series of a non-Health Canada authorized vaccine plus any additional recommended doses of a Health Canada authorized COVID-19 vaccine to complete the primary series.

The definition of "Fully Vaccinated" may change in the future to include new/additional doses of a COVID-19 vaccine, as determined to be necessary by SickKids, or as may be recommended by Public Health Ontario and/or Health Canada. In the event that the definition of "Fully Vaccinated" is changed, SickKids will advise all staff on the time period allocated to become "Fully Vaccinated".

3.0 Purpose

The purpose of this policy is to outline SickKids vaccination requirements as part of a broader COVID-19 prevention and control strategy aimed at protecting our patients, families and staff members including employees, physicians, volunteers, learners and others carrying out activities on hospital premises from COVID-19 infections.

4.0 Policy Statement

As a health-care organization, our top priority is the safety of our patients, families and staff. Here at SickKids, not all of our patients are currently eligible for vaccination and the proportion of infants, children and youth with compromised immune systems at SickKids is much higher than in the general population. Furthermore, SickKids staff may be at a greater risk of exposure to COVID-19 if protective measures are not followed, due to the nature of the work and the higher percentage of the patient population that is not eligible for vaccination. The increased risk SickKids staff face of contracting COVID-19 may lead to an increase of staff absences. Having adequate staffing at SickKids at all times is of the upmost importance to the organization, to ensure SickKids is able to deliver exceptional care to all patients. These are important reasons why it is crucial for SickKids to go above and beyond to protect our patients, families and staff. Subject to the terms set out below, all individuals covered by this policy are required to make a personal commitment to safety by being fully vaccinated against COVID-19.

5.0 Scope

This policy applies to all SickKids staff including employees, medical staff (regardless of whether employed or independent contractor), scientific staff, scientists, volunteers, students (including learners, trainees and fellows) and observers, irrespective of the workplace location or amount of time spent on SickKids' premises, and contractors (businesses or entities operating on the Hospital's premises).

©The Hospital for Sick Children. All Rights Reserved. This document is specific to SickKids internal activities at the time of printing. SickKids does not accept responsibility for use of this material by any person or organization not associated with SickKids. No part of the document should be used for publication without appropriate acknowledgement.

6.0 Roles & Responsibilities

6.1 All those referenced in section 5.0 are required to comply with this policy.

6.2 Hospital Management (Supervisors, Managers, Directors, Senior Leaders)

- Hire and onboard staff who are fully vaccinated against COVID-19 and remind staff to report their vaccination status to Occupational Health and Safety Services prior to starting at the Hospital
- Communicate and/or direct staff to reliable information related to COVID-19 vaccination.

6.3 Occupational Health and Safety Services

- Maintain COVID-19 vaccination records
- Track immunization rates
- Monitor, manage and report on all issues related to exposure or illness involving employees, physicians, volunteers, learners, or others carrying out activities on hospital premises.

7.0 Policy

All individuals covered under this policy are required as a condition of employment or service to:

1. **Be fully vaccinated:** Once vaccinated, provide proof of vaccination to Occupational Health & Safety through the online reporting portal. Acceptable proof of vaccination is the receipt provided by the Ministry of Health at the time of vaccination or an alternative approved by Occupational Health & Safety. Proof of vaccination will be kept in the employee's Occupational Health and Safety file. If there is no documentation on file, staff are not considered to be immunized. If the staff member has been vaccinated outside of Canada, then Occupational Health & Safety will review and provide guidance based on the provincial guidance.

2. **Have a SickKids approved medical exemption:** If COVID-19 vaccination is medically contraindicated, documentation must be obtained and submitted from a family physician, specialist, or a nurse practitioner specifying the reason and duration. The medical exemption form must be submitted to Occupational Health and Safety for review and approval.

3. **Have a SickKids approved other permissible exemption**: If you wish to submit a **request for a human rights exemption** on the basis of creed (religion) or other ground enumerated in the Ontario *Human Rights Code* please complete the following exemption form and submit the required documentation to askHR for review and approval.

All new hires of any staff as defined in section 5.0 of this policy, except for medical, clinical and corporate learners (see paragraph below), are required to: (a) submit proof to the Hospital that they are fully vaccinated against COVID-19 before entering any SickKids' premises. For individuals with a start date, this means they would be required to submit proof upon accepting an offer and prior to their start date. The

©The Hospital for Sick Children. All Rights Reserved. This document is specific to SickKids internal activities at the time of printing. SickKids does not accept responsibility for use of this material by any person or organization not associated with SickKids. No part of the document should be used for publication without appropriate acknowledgement.

Hospital reserves its right to rescind the offer with immediate effect if a candidate fails to satisfy this material condition of employment/placement, and a candidate shall not have any claim, complaint, or cause of action against SickKids as a result.

Medical, clinical, and corporate learners will not be required to submit proof to the Hospital but will be required to: (a) submit proof to their academic institution that they are fully vaccinated against COVID-19 before entering any SickKids' premises; or (b) obtain an approved exemption based on disability (medical), creed (religion) or other ground enumerated in the Ontario *Human Rights Code*. The academic institution ensures the learner meets placement eligibility criteria, as defined by the Hospital. The academic institution collects, collates, and keeps record of proof of COVID-19 vaccination for learners and instructors who are vaccinated. For those who are not vaccinated, the academic institution collects and collates proof of medical reason for not having vaccination, and/or completion of COVID-19 vaccination education session as part of learner registration. If the learner is not vaccinated, the academic institution will consult the Hospital on the approach to this learner's placement on a case-by-case basis. The same conditions apply to instructors from the academic institution who teach at the Hospital. The Hospital may contact the academic institution to verify a learner's COVID-19 vaccination status or proof as appropriate and on a case-by-case basis. The same conditions apply to instructors from academic the institution who teach at the Hospital.

Contractors must ensure that all individuals coming on site to any SickKids premises on behalf of a contractor (including sub-contractors and their employees) must be either 1) fully vaccinated, or 2) have a documented medical or other human rights exemption for not being fully vaccinated against COVID-19. Contractors are required to maintain documentation to demonstrate compliance with this policy including, but not limited to: (1) number of individuals that provided proof of being fully vaccinated against COVID-19; (2) number of individuals that provided a documented medical reason for not being fully vaccinated, (3) number of individuals that provided documentation to support exemption from immunization based on another ground under the Ontario *Human Rights Code*; (4) proof of vaccination; (5) proof of education module completion, where applicable; (6) documentation regarding exemptions, where applicable and (7) testing results, where applicable.

It is strongly recommended that all individuals covered under the policy receive all doses allowed according to provincial eligibility to stay up to date with their COVID-19 vaccines based on guidance from Health Canada and/or Public Health Ontario. Please refer to the Public Health Ontario recommended doses guidance to see if you are up to date.

8.0 Educational Support

The education materials have been approved by the Vaccination Steering Committee and available to staff via the following iLearn.

©The Hospital for Sick Children. All Rights Reserved. This document is specific to SickKids internal activities at the time of printing. SickKids does not accept responsibility for use of this material by any person or organization not associated with SickKids. No part of the document should be used for publication without appropriate acknowledgement.

The education module will include the following components:

- How COVID-19 vaccines work;
- Vaccine safety related to the development of the COVID-19 vaccines; Information about the vaccine and safety/effectiveness
- The benefits and effectiveness of vaccination against COVID-19; and possible risks of vaccination
- Risks of not being vaccinated against COVID-19; and,
- Possible side-effects of the COVID-19 vaccination.

9.0 Testing Program

Staff as described in section 5.0, who have an approved exemption on file will be required to participate in the testing program which, unless provided for otherwise in the policy, includes the following components:

- Testing will be required twice weekly; each test must be completed 48 to 72 hours apart
- Testing will be by rapid antigen tests and will be performed at home
- Test kits can be picked up at SickKids
- Test results will be submitted to Occupational Health via the At-Home COVID-19 Testing Report.
- Results will be monitored for non-compliance

10.0 Non-compliance with the policy

As a health-care organization, SickKids' top priority is the safety of our patients, families, and staff. At SickKids, not all of our patients are currently eligible for vaccination and the proportion of infants, children and youth with compromised immune systems at SickKids is much higher than in the general population. Furthermore, SickKids staff may be at a greater risk of exposure to COVID-19 if protective measures are not followed, due to the nature of the work and the higher percentage of the patient population that is not eligible for vaccination. The increased risk SickKids staff face of contracting COVID-19 may lead to an increase of staff absences. Having adequate staffing at SickKids at all times is of the upmost importance to the organization, to ensure SickKids is able to deliver exceptional care to all patients. These are important reasons why it is crucial for SickKids to go above and beyond to protect our patients, families and staff. To protect our vulnerable patients, families and staff, SickKids has made the decision that being fully vaccinated against COVID-19 is a condition of employment for all staff.

Accordingly, SickKids staff not in compliance with the vaccination requirements, or who do not have an approved exemption on file will be subject to an unpaid leave of absence and continued non-compliance may lead to termination of employment.

Contractors who are not in compliance with the policy will not be allowed to perform activities for SickKids.

©The Hospital for Sick Children. All Rights Reserved. This document is specific to SickKids internal activities at the time of printing. SickKids does not accept responsibility for use of this material by any person or organization not associated with SickKids. No part of the document should be used for publication without appropriate acknowledgement.

11.0 Privacy and Confidentiality

Occupational Health and Safety Services will collect and maintain in the individual's confidential file documentation of COVID-19 vaccination status, including vaccine refusal, information pertaining to medical exemptions and confirmation with respect to any other exemption granted. Supporting documentation related to any non-medical request for an exemption will be held by Human Resources.

The information provided by staff will be used internally by SickKids for the purpose of administration of the policy, outbreak planning and management, workforce management, scheduling and as otherwise permitted or required by law. For learners, this includes sharing vaccination status information with the academic institution with which they are affiliated. Vaccination status information will be held in confidence, securely stored and shared only as required to achieve the above purposes. SickKids may be required to collect and maintain statistical information and, on request of the Office of the Chief Medical Officer of Health to disclose the statistical information to the Ministry of Health. Any other disclosure of information provided by staff in accordance with this policy will be de-identified and/or aggregated, unless permitted or required by law (e.g., public health reporting, occupational health requirements). Any questions about the collection and use of this information should be directed to the Privacy Office: privacy.office@sickkids.ca

12.0 Related Policy

Occupational Health & Safety
Staff Immunization and Surveillance
Universal Masking during COVID-19 Pandemic

13.0 References

John Hopkins Medicine
https://www.hopkinsmedicine.org/health/conditions-and-diseases/coronavirus

Ministry of Health. February 2022
https://www.health.gov.on.ca/en/pro/programs/publichealth/coronavirus/docs/vaccine/COVID-19_vaccine_info_sheet.pdf

National Advisory Committee. October 2021
https://www.canada.ca/content/dam/phac-aspc/documents/services/immunization/national-advisory-committee-on-immunization-naci/recommendations-use-covid-19-vaccines/recommendations-use-covid-19-vaccines-en.pdf

Public Health Ontario
https://www.publichealthontario.ca/en/about/blog/2021/covid-19-transmission

©The Hospital for Sick Children. All Rights Reserved. This document is specific to SickKids internal activities at the time of printing. SickKids does not accept responsibility for use of this material by any person or organization not associated with SickKids. No part of the document should be used for publication without appropriate acknowledgement.

Ontario Health
https://www.health.gov.on.ca/en/pro/programs/publichealth/coronavirus/docs/contact_mngmt/COVID-19_fully_vaccinated_interim_guidance.pdf

©The Hospital for Sick Children. All Rights Reserved. This document is specific to SickKids internal activities at the time of printing. SickKids does not accept responsibility for use of this material by any person or organization not associated with SickKids. No part of the document should be used for publication without appropriate acknowledgement.

Appendix E

SickKids Fire Alarm Bypass – Hot Work & Fire Protection Impairment Information, Procedures & Responsibilities

SickKids®

Policy

It is the policy of the Fire Marshal of SickKids Hospital that all fire alarm signaling devices which may be activated due to any type of work, shall be bypassed by the hospital Building Operations Department prior to work commencing and restored immediately upon the completion of the work. Alternate measures for fire protection may be required and a fire watch shall commence by all persons working in any area that has a fire alarm or fire sprinkler impairment. Hot work shall not be conducted in any area where there is a fire sprinkler impairment. All Fire Alarm Technicians shall have a valid CFAA certification when working at The Hospital For Sick Children. All Fire Sprinkler Fitters shall have a valid Ontario College Of Trades (OCAT) certificate, (CASA certification also preferred) when working at The Hospital For Sick Children.

Submitting Fire Bypass For Approval

The Construction Site Supervisor or Hospital Supervisor shall submit a Fire Bypass Form electronically to: atyourservice@sickkids.ca. One Fire Bypass Request per email must be submitted for each day of work for each fire zone and floor that work is being completed in. Incomplete requests will not be authorized and work will not commence.
Fire Bypass Requests shall be submitted the week in advance of the work by Wednesday at 3pm. All late requests will be declined.
The person submitting a fire bypass will receive an automated response generating a work-order number. Please note this does not mean that your request has been approved. The Fire Safety Coordinator or delegate will assess each request and an approval email will be sent to the person submitting the request. All approved requests will be sent to the Building Operations Department for action. You will be contacted should there be any issue with your fire bypass request.

Submitting Hot Work and Red Tag (Fire Sprinkler Impairment) Permits For Approval

Electronic Hot Work permits must be filled out and referenced on the corresponding Fire Bypass Request. At the main campus, the Hot Work Permit must be submitted to the Fire Safety Coordinator for review. Requests must be received the week in advance of the work by Wednesday at 3pm. (Please see enclosed procedures)

Fire Protection Equipment Out Of Service (Red Tag) - Fire Sprinkler Impairments, Building Operations requires 14 working days - the Red Tag must list the affected areas and the sprinkler valves that will be shut off by the Building Operator prior to being authorized. Contractors are responsible to work with the Building Operations Supervisor to determine what valves will be closed and what area of the hospital will be affected and reference this on the Fire Bypass Request form, and submit the red tag to the appropriate Operations room. Approved Red Tags will be emailed to the contractor from the Fire Safety Coordinator. It is the contractor’s responsibility to print and display the red tag at the designated location.

Contacting Building Operations Prior To Fire Bypass

Building Operators shall not complete a fire bypass until such time that the person requesting the bypass is on–site and **meets** with the Building Operator to confirm the details of the bypass at the CACF in the building where the bypass is to be completed:

Atrium:	M726	Main Floor	Near the Elizabeth St. Entrance.
Annex:	M542/M543	Main floor	Near the Gerard St. Entrance.
PGCRL:	01.9610	Ground floor	Main lobby PGCRL

The Building Operator will be available at the CACF for 10 (ten) minutes from the time of the scheduled bypass request. Should you be late for your request time, you will be required to contact the Building Operator and he will attend the CACF when he is available to assist with the bypass.

Annex Building Operator:	Pager:	(416) 530-7011
	Cell:	(416) 771-4196
Atrium Building Operator:	Pager:	(416) 377-1854
	Cell:	(416) 771-8279
PGCRL Building Operator: Security:		Front Desk PGCRL

Approved Hot Work and Red Tag (Fire Sprinkler Impairment)

Hot Work or Red Tag work shall not commence until the contractor has the permit at the work site and the permit is posted at the work site. Red tags shall be placed on valves that are taken out of service in conjunction with the Building Operator.

Protection Services: **416-813-7122**

Cancellation Of Permits

If your work schedule changes and you will not be using a fire bypass or permit, contact At Your Service and the Building Operator and advise of the cancellation of the work.

Restoration - Fire Bypass

Any person who has any device or portion of the fire alarm system on bypass or an impairment to any fire protection system shall not leave property until the fire alarm system has been restored and all devices have been confirmed to be in working order by the on-duty Building Operator.

The contractor shall meet the Building Operator and confirm the details of the bypass restoration at the CACF in the building where the system was bypassed.
Systems will be restored to normal operation after ten minutes from the time of scheduled restoration. In the event that a fire alarm occurs, and the contractor has not met with the

Building Operator, all costs incurred will be charged to the project and further bypasses will be refused until the Fire Safety Coordinator has completed an investigation.

Any person who causes any portion of the fire system to be impaired or any device not to function as intended shall immediately advise the Fire Safety Coordinator and the on-duty Building Operator.

Alternative measures for fire protection and occupant safety will be determined and repairs to the fire system must be commenced as directed by the Fire Marshal or Fire Safety Coordinator.

Fire Watch & Fire In The Work Area

The Construction Site Supervisor or delegate shall ensure a fire watch is maintained in the bypassed area. There shall be a contractor on site at all times when any portion of the fire alarm system is bypassed. All Hot Work required precautions must be followed. Please see enclosed procedures.

In the event of Fire the Contractor or Employee shall utilize REACT procedures.

- Remove endangered Persons
- Ensure windows and doors are closed
- Activate the fire pull station
- Call 5555 on any internal phone
    - State your name
    - The location of the fire noting the nearest room number
- Call 911 via cell phone if a house phone is not available
- Try to fight the fire if safe to do so after the above steps have been completed

Fire Alarm Chargeback

Should a fire alarm be generated due to non-compliance with these procedures and processes or through negligence of the contractor or employee, the Project or Department will be charged for all costs of fire department response and repair to the fire alarm system.

Fire Alarm Technicians

In order to work at The Hospital For Sick Children, all fire alarm technicians shall have a valid CFAA certification card which must be presented to the Fire Marshal or delegate upon request. All Fire Alarm Technicians completing a Fire Watch at a CACF panel shall be trained in emergency procedures by the Fire Safety Coordinator prior to work commencing.

Fire Sprinkler Fitters

In order to work at The Hospital For Sick Children, all fire sprinkler fitters shall have a valid Ontario College of Trades Certificate and CASA certification is preferred. The certification card must be presented to the Fire Marshal or delegate upon request.

PROCEDURES

Fire Bypass Requests

1. Construction Site Supervisor to determine need for fire bypass, hot work and fire protection equipment impairment (Red Tag) in conjunction with the Fire Safety Coordinator and Building Operations and complete the fillable form.
    a. Ensure that all requested information is completed on the form.
    b. Any time that a fire alarm technician or sprinkler technician will be working on the main fire panel in any building, the technicians name and certificate/ card must be submitted on the Fire Bypass Request in the Bypass Information Section.
        i. incomplete forms will not be approved.

2. Note the form may be saved and the date/ time or details may be changed to assist in submitting multiple bypasses.

3. A separate email is required for each fire bypass.
    a. Hot Work and Red Tag Permits: If Hot Work or Red Tag work is being completed at the same time in the same area each day one (1) Hot Work or Red Tag permit is to be submitted and the permit number referenced on each fire bypass for each day for up to a one (1) week period.

4. Form to be submitted to atyourservice@sickkids.ca the week in advance of the work by Wednesday at 3pm. (Note – Red Tag permits require 14 day coordination)
    a. Ensure that the Project Manager or Supervisor is copied on the form.

5. Electronic copies for Hot Work Permits and Red Tag permits are to be submitted for approval the week in advance of the work by Wednesday at 3pm.

6. The Fire Safety Coordinator or delegate will review all requests and approve the requests through Archibus.
    a. Incomplete requests or requests requiring more information will be sent back to the requestor.

7. Approved requests are sent to the Building Operators to complete the request.

8. On the date and time of the request, person completing work will meet with the on-duty Building Operator prior to the bypass being completed.
    a. Confirm the details of required bypass.

    b. Contractor to contact Protection Services to bring the Hot Work and Red Tag permits to the work area. Work will not commence until the permits are in place.

c. Contractor/ Employee will not commence work until the bypass has been confirmed and the site has been reviewed by the Construction Site Supervisor or Hospital Supervisor to ensure that a fire watch has been commenced and Hot Work and Red Tag procedures are being followed

d. The on-duty Building Operator will confirm with the Fire Services Coordinator or delegate when a Fire Sprinkler impairment has occurred and the Fire Services Coordinator will update Toronto Fire Services and the hospital Insurer.

e. When the fire alarm system is bypassed, a fire watch shall be completed by the Contractor or Employee in the area where the fire alarm system is impaired.

f. All contractors and employees completing hot work will be required to complete a fire watch for a minimum of one hour after completion of the hot work.
    i. Additional fire watch requirements may be required and will be determined by the Fire Safety Coordinator

g. Any time the main fire panel is on global bypass or as directed by the Fire Marshal, Fire Safety Coordinator or delegate, a fire watch shall be implemented in the CACF in the affected building by the hospital Building Operations Department

h. The Building Operator and Contractor or Employee will meet at the CACF in the affected Building at the time listed for bypass completion and ensure that all devices in the bypassed area have been restored to normal operations prior to the Contractor or Employee leaving site.

i. Upon restoration of a Red Tag – Fire Sprinkler Impairment – (all valves returned to normally open) the Building Operator will update the Fire Safety Coordinator who will clear the permit with Toronto Fire Services and the hospital Insurer.

j. In the event that any portion of the fire alarm system is impaired the Construction Site Supervisor or Hospital Supervisor will affect repairs immediately and contact the Fire Marshal, Fire Safety Coordinator to determine alternate measures of fire protection.

HOT WORK

1. A hot work permit is required for any operation involving open flame or producing sparks. This includes, but is not limited to: brazing, cutting grinding, soldering, pipe thawing, torch-applied roofing and welding, etc.

2. If there is a practical and safer way to do the job without hot work, that method shall be used.

3. No hot work is permitted without authorization from The Fire Marshal, Fire Safety Coordinator or Delegate, in the form of a signed hot work permit and an approved electronic fire bypass.

4. The permit will be valid for a maximum of one shift, or twelve hours, whichever is shorter. After this time period, the contractor or employee will need to submit for a new permit. If the same type of work is being conducted in the same location and time frame, one permit will be issued for a calendar week. Ensure that the same hot work permit number is submitted on each fire bypass.

5. It is the responsibility of the contractor or employee to provide all fire safety equipment in good repair at the site of the Hot Work including an appropriate fire extinguisher and all equipment necessary to make the job safe listed on the Required Precautions Checklist.

6. No hot work is permitted without a designated fire watch present. The Construction Site Supervisor or Hospital Supervisor will designate an employee to serve in that role. A fire watch will also be completed by the Protection Services Department. These employees will have total control over the hot work area for fire prevention. If unsafe conditions are observed during the hot work operation, the work will be stopped until the hazard is neutralized or eliminated. The cost of providing a fire watch may be charged back to you.

7. All Fire Watch Staff will be trained in REACT procedures - In the event of an emergency all processes will be stopped, the hospital emergency line will be contacted at 5555 and 911 will be contacted.

8. The Construction Site Supervisor, Hospital Supervisor will verify that all hot work equipment is in proper working order and in a fire safe condition.

9. An inspection of your equipment and or site may also be made by the Fire Marshal or Fire Safety Coordinator, before the hot work permit is issued. Any unsafe equipment will be removed from the property.

ISSUING HOT WORK PERMITS

The first step in evaluation a hot work permit is to determine if the work is truly necessary. Can the task be accomplished safely by other means? Can the work be moved to a designated area where a hot work permit is not required?

If hot work cannot be done by other means at a designated site then the issuing Construction Site Supervisor or Hospital Supervisor will review the site safety precautions and complete Part 1 of the hot work permit.

Completing A Hot Work Permit

Part 1

Hot Work Being Conducted by:

- Contractor or employee who will be completing the work

Job Task or PO #:

- Archibus work order number will be entered upon approval

Location/Bldg & Floor:

- Atrium, Annex, P.G.C.R.L.
- Room number

Date Permit Expires:

- The permit will be limited to a single shift of 12 hours.
- The date the permit expires will be documented on the form. If the work is not completed within a single shift, or by the date on the form, a new permit will be issued.
- Weekly permit: If the same work is being completed in the same area and time frame a permit may be submitted for a calendar week. Submit the same Hot Work Permit Number on each fire bypass.

Require Precautions Checklist

- Review of the operations/tasks have been conducted and temporary Management of change issued as necessary.
- Work permits or line cutting permits have been reviewed and issued as necessary.
- Sprinkler protection, hose streams and fire extinguishers are in service and operational.

- Hot work equipment in good repair and secured as necessary within 35' (10m) of task area(s)
- The issuing Construction Site Supervisor or Hospital Supervisor will review all items in this section and check the applicable precautions that will be taken. Any ductwork openings shall be covered to prevent sparks from entering the ductwork and being carried into the system.

Work on walls or Ceilings:

- The issuing Construction Site Supervisor or Hospital Supervisor will check the applicable precautions that will be taken.

Work on Enclosed Equipment:

- The issuing Construction Site Supervisor or Hospital Supervisor will review all items in this section and check the applicable precautions that will be taken. Any ductwork openings shall be covered to prevent sparks from entering the ductwork and being carried into the system

Fire Watch

- A constant fire watch shall be completed until one hour after completion of the hot work.
- Fire Marshal, Fire Safety Coordinator or delegate will advise if an extended fire watch is required and note the requirements on the permit.
- The Construction Site Supervisor or Hospital Supervisor will ensure that a construction staff member is responsible for a constant fire watch in all areas affected by the hot work and for any extended fire watch.
- A Protection Services hourly fire watch will commence.

Part 2

Part 2 of the Hot Work Permit and the Hang tag will be issued to the Contractor or Employee completing the hot work on the date and time of the hot work.

Instructions

- Person doing Hot work: Document the time work started and post the permit at the Hot Work Location. After Hot Work has been completed, document the date and time the work has been completed and leave the permit at the site until the fire watch has been completed.

- Fire Watch and Final Check Off: Prior to leaving the Hot Work location, conduct a final inspection, sign and document the date and time the fire watch ended.

- Construction Site Supervisor or Hospital Supervisor after reviewing the work site and confirming that all hot work and fire watch has been completed sign Final Check Off on the Hot Work permit - Contact Protection Services @ 416-813-7122.

Fire Protection Impairment Program (Red Tag)

An impairment of any fire protection system or equipment occurs when that protection system, alarm or detection device is removed from service either partially or completely. This includes planned or emergency outages of the system or devices. The probability of a fire or explosion causing major damage is increased whenever a system, alarm or detection device is impaired. The longer the protection system is impaired the greater the probability becomes. Therefore, it is necessary to minimize the duration and scope of any impairment or provide for an alternate protection system.

A protection system may become impaired for a number of reasons, such as maintenance, renovation, construction, equipment failure or just forgetting to activate a system or device. To assure that the impairment is properly handled, The Hospital For Sick Children utilizes a sprinkler impairment program in conjunction with the hospital insurers.

Impairment control is a shared responsibility between the Fire Marshal, Fire Safety Coordinator and the Building Operations Department.

a. The Fire Marshal or Fire Safety Coordinator or Delegate will oversee ensuring that the Fire Protection Systems:
    i. Are maintained in working order.
    ii. Notify Toronto Fire Service and the hospital insurer at the start and finish of impairments.
    iii. Shut down hazardous processes in the area of impairment.
    iv. Issue instructions with regards to alternate fire protection measures for occupants during impairments.
    v. Providing fire watch in affected areas.
    vi. Inspecting and maintaining Fire Protection Systems and coordinating repair to all fire and fire sprinkler related systems.
    vii. Are maintained by qualified personnel.
b. Building Operations will complete the following tasks:
    i. Inspecting and maintaining Fire Protection Systems and advising The Protection and Fire Services Department of any issues or impairments with fire Protection Systems.
    ii. Determining valves, fire zones and equipment that will be impacted due to impairment.
    iii. Assisting authorized Sprinkler and Fire Protection Installers with draining down and restoring fire sprinkler systems and ensuring that the system is operational through testing.

2. Unless otherwise noted:
    a. All sprinkler valves accessible in public areas will be locked open with a padlock
        i. Keys will be assigned to Protection and Fire Services and Building Operations
    b. All fire control valves will be electronically supervised at The Hospital For Sick Children.

Planned Impairments – Procedures

1. Construction Site Supervisor or Hospital Supervisor will work in conjunction with Building Operations to submit a Shutdown Request and Fire Protection Equipment Out Of Service "Red Tag" at least fourteen (14) days prior to the impairment.

2. An electronic Fire Bypass Form to be submitted to atyourservice@sickkids.ca at least fourteen days in advance of the work to be completed (Note – Red Tag permits require 14 days coordination)
   On the form and the Red Tag hard copy ensure to list:
   a. Red Tag #
   b. Impaired Equipment
   c. Equipment Valve Number(s)
   d. Work To Be Accomplished (back of permit)
   e. Protecting: (areas that will be impaired)
   Ensure that the Project Manager or Supervisor is copied on the form

3. The Fire Safety Coordinator or delegate will review all requests and approve the requests through Archibus.
   Incomplete requests or requests requiring more information will be sent back to the requestor.

4. Approved requests are sent to the Building Operators to complete the request.

5. On the date and time of the request, person completing work will meet with the Building Operators and confirm that the drain down and bypass to be completed.

6. The Construction Site Supervisor or Hospital Supervisor will contact Protection Services, The On-Duty Fire Watch Guard will bring the Red Tag and Fire Watch Log Sheet to the work area. Contractor to ensure that the hang tag is prominently displayed on all valves where the Fire Protection Equipment is out of service.

7. Contractor/ Employee will not commence work until the bypass has been confirmed and the site has been reviewed by the Construction Site Supervisor or Hospital Supervisor to ensure that a fire watch has been commenced and Hot Work and Red Tag procedures are being followed.

8. The on-duty Building Operator will confirm with the Protection & Fire Services Coordinator or delegate when a Fire Sprinkler impairment has occurred and the Protection & Fire Services Coordinator will update Toronto Fire Services and the hospital Insurer.

9. When the fire alarm system is bypassed, a fire watch shall be completed by the Contractor or Employee in the area where the fire alarm system is impaired and an hourly Protection Services Fire Watch will occur.

10. All contractors and employees completing hot work will be required to complete a fire watch for a minimum of one hour after completion of the hot work.
    a. Additional fire watch requirements may be required and will be determined by the Fire Marshal, Fire Safety Coordinator or delegate

11. Any time the main fire panel is on global bypass or as directed by the Fire Marshal Fire Safety Coordinator or delegate, a fire watch shall be completed in the CACF in the affected building by the hospital Building Operations Department

12. The Building Operator and Contractor or Employee will ensure that all devices in the bypassed area have been restored to normal operations prior to the Contractor or Employee leaving site.

13. Upon restoration of a Red Tag – Fire Sprinkler Impairment – the Building Operator will update the Fire Safety Coordinator who will clear the permit with Toronto Fire Services and the hospital Insurer.

14. In the event that any portion of the fire alarm system is impaired the Construction Site Supervisor or Hospital Supervisor will affect repairs immediately and contact the Fire Marshal, Protection & Fire Safety Coordinator to determine alternate measures of fire protection.

Emergency Impairments

An emergency impairment occurs when an unexpected event impairs the normal function of the fire protection system. Ie a burst sprinkler pipe.

1. Contractor or Employee will notify the Construction Site Supervisor or Hospital Supervisor, Building Operations, Fire Safety Coordinator and Project Manager immediately of any emergency impairment.

2. Building Operator and Contractor or Employee to isolate the situation or condition causing the impairment keeping as many services active as possible.

3. Building Operator to contact the alarm monitoring company and advise of the impairment.

4. Fire Marshal, Fire Safety Coordinator or Delegate to contact Toronto Fire Service and the hospital insurer and advise of the impairment.
    a. GlobalProperty.Impairment@aig.com
    b. 1-817-490-3255
    c. 1-877-705-7287

5. Fire Marshal, Fire Safety Coordinator or Delegate to coordinate safety measures and alternative fire protection for occupants with the Building Operator and Construction Site Supervisor or Hospital Supervisor and Protection Services.

6. Construction Site Supervisor, Hospital Supervisor to complete a Red Tag and submit an electronic fire bypass as soon as possible.

Fire Watch Procedures – CACF Panel

All persons completing work and or fire watch on any fire alarm panel at The Hospital For Sick Children shall have a valid CFAA certification. The technician's name and certification number must be submitted on the fire bypass request and the certification card must be presented to the hospital Fire Marshal or delegate prior to starting work at the fire panel.

Anytime Bypass Switches: Audible, Visual, are activated a fire watch Shall Commence from the main fire panel located in the C.A.C.F. room.
Fire Watch shall only be completed by H.S.C. trained:

A. H.S.C. Building Operators
B. JCI Fire Alarm Technicians
C. JCI Sprinkler Technicians
D. Siemens Fire Alarm Technicians
E. J.D. Collins Fire Alarm Technicians
F. A CFAA certified fire alarm technician approved and trained by the SickKids Fire Marshal or delegate

Requests for fire watch by Building Operators shall be made on the Fire Bypass Request form and communicated to the Building Operator Supervisor at least forty-eight (48) hours in advance to allow the Building Operator Supervisor to arrange for correct staffing and determine if a charge back to the project or department is required.

Building Operator fire watch from the main fire panel on day shifts will start at 07:15 hours.

All persons completing fire watch at a The Hospital For Sick Children fire panel shall receive training from the hospital Fire Safety Coordinator or delegate prior to starting a fire watch.

CACF Fire Watch Procedures

1.0 Fire Watch Procedures From The Main Fire Alarm Panel

- 1.1 Fire Watch shall maintain a constant visual of the main fire panel
- 1.2 Fire Watch shall have a hospital portable radio to assist in communication with Security and Building Operations
- 1.3 Fire Watch shall be aware of all areas of the fire alarm on bypass and the contact person for the area of bypass and the reason for the bypass.
  - 1.3.1. In the event a fire alarm is received in an area under bypass the Fire Watch shall:
    - 1.3.1.1 Contact Protection Services – 416-813-7122 to investigate the area with the Building Operator to determine if the alarm is due to construction/testing or is a Code Red.
      - 1.3.1.1.1 Protection Services and Building Operations to report back and initiate Code Red procedures as required upon investigation.
- 1.4 Ensure that any/all fire alarms from any area that is not being tested or on bypass for construction, are initiated as a Code Red from the main fire alarm panel.
- 1.5 Ensure that all bypass switches are restored to normal operation and ensure the system functions under the normal sequence of operations for fire alarm condition.
- 1.6 Contact 5555 (416-813-5555) from cell and advise of the fire alarm and the location of the alarm.
- 1.7 If audible alarms do not activate upon restoration of the bypass switches: 1.7.1 Activate the manual pull station adjacent to the CACF to alert occupants of the Code Red.
- 1.8 If the fire is in your area, follow approved REACT procedures.
  - 1.8.1 Remove endangered persons
  - 1.8.2 Ensure windows and doors are closed
  - 1.8.3 Activate the fire alarm pull station
  - 1.8.4 Call – 5555 internally – Cell – 416-813-5555 1.8.4.1 Advise the operator of your name, the location of the fire
  - 1.8.5 Try to fight the fire if you are trained and you have an escape plan.

Emergency Contact Numbers

H.S.C. – Emergency Line	**Ext. 5555** **416-813-5555**
H.S.C. Fire Safety Coordinator	**Ext. 205399** **Tel. 647-330-5793**
Protection Services	**Ext. 7122** **Tel. 416-813-7122**
Atrium Building Operator	**Cell 416-771-8279** **Pager 416-377-1854**
Annex Building Operator Cell	**416-771-4196** **Pager 416-530-7011**
Toronto Fire South Command	**416-338-9000**
JCI Monitoring	**1-800-289-2647**

Appendix F

Contractor Loading Dock Protocol

SickKids®

Annex Loading Dock:

- Contractor shall schedule access to Annex Loading Dock, call @yourservice (416) 813-7111.
- Dock is purely for loading/unloading purposes. Contractor to park/idle elsewhere.
- The gate to the Annex loading dock is open Monday to Friday from 6am to 6pm. It is locked afterhours and closed on weekends.
- For scheduled after-hours access to loading dock by contractor - Security shall unlock gate per the approved calendar appointment. (Security can be contacted at (416) 813-7122)
- Contractor to follow pre-arranged route from loading dock to work site in building(s).
- *Note; SickKids is an operational hospital. Unscheduled operational deliveries may occur which take priority.*

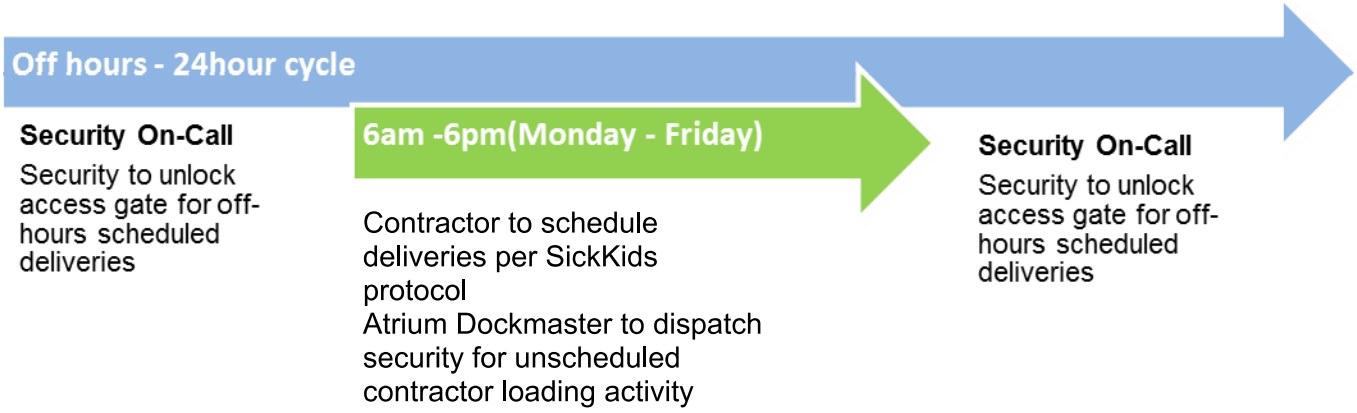

Fig. 1 – SCHEDULING – Monday to Friday

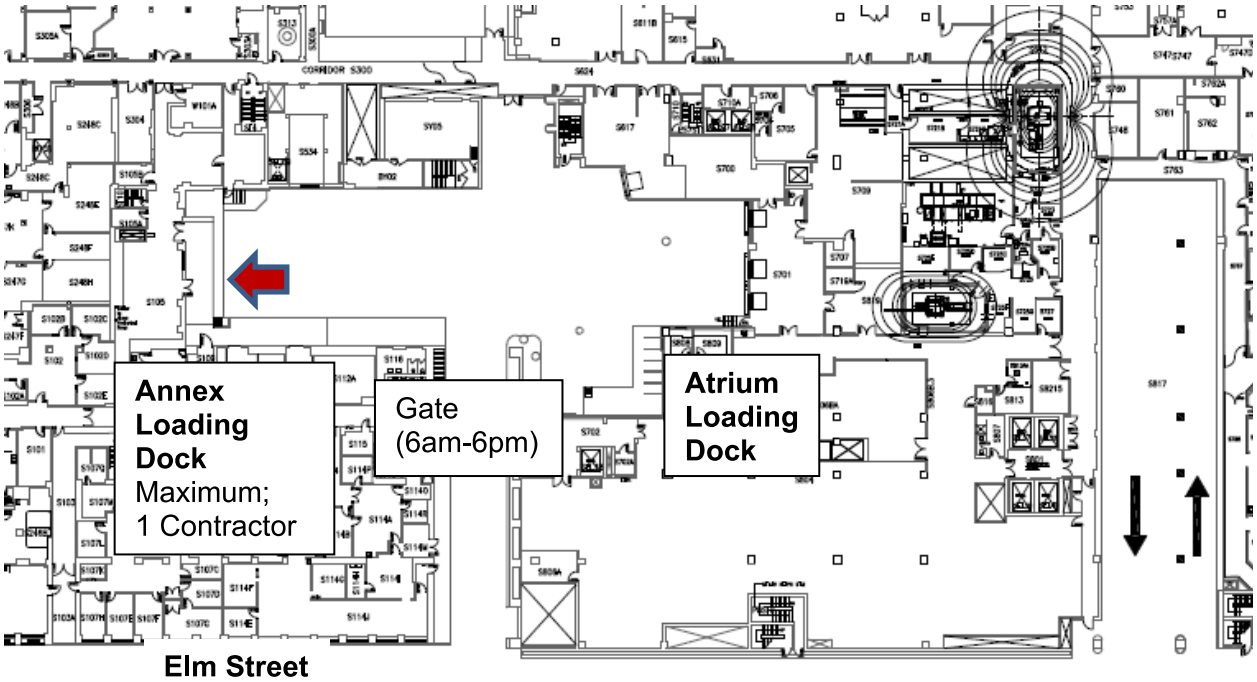

Fig.2 – ACCESS

SickKids

Appendix G

Construction Site Hoarding Standards

SickKids®

The SickKids **Hospital Procedures for Construction & Renovation Projects – Construction Site Hoardings** document was prepared by Facilities Planning and Development and completed as a collaborative work of the following departments:

Department Name

Creative Services Studio

Communications & Public Affairs

Facilities Planning and Development

Fire Marshal

Infection Prevention & Control

Occupational Health & Safety

Plant Operations

Protection Services

Research Institute

1. Introduction

1.1 Objectives

The objective of this *construction site hoarding guideline* is to provide a uniform methodology and structure for project process of planning construction site hoarding to include infection prevention, signage and graphics, with relation to renovation and construction projects at the Main Campus and Peter Gilgan Centre for Research & Learning (PGCRL) at The Hospital for Sick Children (SickKids).

Hoarding provides an excellent opportunity to inform patients, families and staff about our facilities upgrades; furthermore, it is understood by all that there is a basic need for effective control and a standard framework to guide all stakeholders in the effective planning, implementation and monitoring process of such protective barriers.

The objectives of this guideline are outlined as follows:

- Provide the minimum standard for construction hoarding for SickKids
- Provide instructions on how to identify the type of hoarding and the preventative measures required for each project in accordance to the CSA standard.
- Identify the areas in the hospital that require effective and adequate communications and branding to support and inform people about renovation and construction projects.
- Establish cost for materials required to be included in the project cost estimate prepared for inclusion into contract documents and/or Stage 1 Sketch Plan, Design Brief and Order of Magnitude Cost Estimate.

1.2 Reference

- CSA Z317.13 or latest version of CSA Group Infection control during construction, renovation, and maintenance of health care facilities
- Occupational Health and Safety Act and associated regulations
- Ontario Fire Code 2015
- SickKids Policy and Procedure: Infection Control Related To Building Maintenance, Repair, Construction, Renovation, and Physical Plant Projects

1.3 Revisions

This guideline will be reviewed and updated on an annual basis. Sections will be revised and reissued as deemed necessary.

1.4 Enquiries

Any enquiries about this guideline, or its contents, should be directed to SickKids Facilities Planning & Development Project Manager / Project Coordinator.

2. Guidelines for Construction Hoarding

2.1 Guidelines on use of construction hoardings to uphold Infection Prevention And Control preventative measures during constructions, renovations and maintenance

All projects must be initially classified by Population Risk Group and Construction Activity Type to establish the level of preventative measures, including hoarding, are required. This can be accomplished using the coordinating tables found in the most current version of CSA Z317.13 (also provided in the Appendices of this document) and using SickKids policy Infection Control Related to Building Maintenance, Repair, Construction, Renovation, and Physical Plant Projects. The classification process will be completed in conjunction with IPAC and Occupational Health and Safety.

2.1.1 Materials

Refer to the most current version of CSA Standard Z317.13 for the type of hoarding required based on the preventative measures analysis. As well, refer to SickKids policy Infection Control Related to Building Maintenance, Repair, Construction, Renovation, and Physical Plant Projects and the Occupation Health and Safety Act (OHSA) and associated regulations.

2.1.2 Procedures

a. The Project Manager shall have a preliminary review of the Population Risk Group and Construction Activity Type for the required hoarding (refer to 5. Hoarding Classification).
b. The Project Manager is to involve the Infection Control (IC) Practitioner and Construction Safety Officer in the early stages of the planning process to determine as to which type of preventative measure will be required for the project.
c. Once preventative measures and type of hoarding is determined, this should be clearly communicated in the tender documents in order for the costs associated with the IPAC hoarding requirements to be part of the contractor's bid. Site hoarding must meet the minimum standards of installation set forth in the most current version of CSA Standard Z317.13 and OHSA, as well as any additional requirements specified in this document.
d. Following the contract award, a pre-construction meeting is held for a final discussion on the IPAC preventative measures and hoarding requirements prior to hoarding install. A documented hoarding plan is to be developed by the constructor for review and approval by SickKids stakeholders.
e. After hoarding install and prior to commencement of any construction activity, the constructor shall call for the IC Practitioner, Occupational Health and Safety and Construction Safety Officer, and the Project Manager to conduct a final inspection on hoarding compliance with the specified preventative measures and hoarding requirements. Construction can start once the preventative measures and hoarding are approved by the Project Manager, IC Practitioner and Construction Safety Officer. Any amendments to the hoarding plan are to be made by the constructor and a copy provided to the SickKids Project Manager.

2.2 Guidelines on use of construction hoardings as opportunities for Promotional Campaign for SickKids

Projects falling under a high/public traffic zone provides the opportunity for communications space when fixed to site hoarding as branded by SickKids. They provide a professional, branded look to construction sites, masking unsightly developments and often providing interesting information to passers-by.

Any materials being affixed into/onto construction hoarding for any reason must not breach or damage the hoarding materials and surfaces. The purpose and priority of construction hoarding is to prevent migration of dust and debris – both visible and invisible – into areas with patients and staff. Dust can carry harmful fungal spores that can cause overwhelming infection in our patient population.

All hoardings for projects that will be in high-traffic public areas (as per 5c. Hoarding Classification Matrix) and will have opportunity for promotion or campaign, shall be treated with hoarding wraps as per Creative Services direction (see 6. Figure 9. Hoarding Wrap – High Density / Public Traffic Area for sample). Standard Hoarding Wrap should be floor to approximately 7'-0" high, aligning with top of door frame, but can be reviewed per case basis due to variation of site conditions. This initiative must be determined at the early stages of the project (i.e. sketch plan) in order to include the cost and for early planning for the Project Manager with Creative Services.

Wayfinding signage will also have to be well coordinated among the user group, the Project Manager and Creative Services department, whenever public areas or access points (i.e. public washrooms, entry ways, clinical hallways) will be blocked off by the hoarding install.

2.2.1 Material

The graphic materials used for construction site hoardings shall be extremely durable and can withstand all conditions without fading or cracking. The department to initiate the project should work alongside with Creative Services Studio and Communications & Public Affairs to coordinate the requirements for the specific project needs.

2.2.2 Procedures

a. Refer to the 5c. Hoarding Classification Matrix, filter the project at the 2nd column as to traffic density and identify the requirements for notices, wayfinding signage/graphic, painted hoarding, and hoarding wraps.
b. Creative Services Studio and Communications & Public Affairs (for messaging) must be engaged at the early stages of the project for staff involvement on the complete process of planning construction site hoarding requirements on a project specific basis.
c. Funding source/allocation for the signage requirement will also be crucial for this exercise. It is crucial to involve CSS in the beginning of the project planning phase to capture the estimated costs into the budget.

d. Creative Services Studio (CSS) will outline the requirements and determine whether these can be done in-house or will be processed through their department to a vendor.
e. If the project requires hoarding wraps, CSS shall develop Graphic Concept and Design for approval by Stakeholders involved (i.e. FPD, End Users, C&PA, Foundations, and Donors, etc.) during Project Design Development stage.
f. CSS will apply approved Graphics and create Preliminary Hoarding Layout per architectural drawings linear footage for cost and production lead time estimate.
g. CSS will be provided a dimensioned Hoarding Plan (supplied by awarded Contractor/Constructor), indicating the hoarding linear frontage, entrance size & location and additional interferences.
   Timeline: Contractor whall provide Hoarding Plan within 1-2 weeks after construction contract is signed and meeting with IPAC and Occupational Health has taken place.
h. CSS shall make any adjustment to the Preliminary Hoarding Layout once Contractor/Constructor provides the dimensioned Hoarding Plan, to create dimensioned Hoarding Elevation drawings for final costing and Stakeholders approval.
   Timeline: CSS will require 2 weeks to create dimensioned Hoarding Elevation drawings and up to 3-4 weeks if design concept is to be modified and graphic needs to be redesigned.
i. CSS shall confirm and validate preferred vendor's previous estimate including delivery/lead time, for G.C. to procure once quote is approved by FPD.
   Timeline: Upon approval of Hoarding Elevation:
      i. CSS will require 2-3 days to obtain final quote from vendor
      ii. Constructor to issue P.O. to vendor within 1 week.
      iii. Production lead time is approx. 2 weeks
j. CSS shall participate in the review and approval of installed hoarding wraps.
k. Hoarding display design shall allow for appropriate space for mandatory health and safety signage by Constructor (Refer to 6. Figure 5 Sample of Safety Signage by Constructor), as reviewed by Occupational Health & Safety.

2.3 Guidelines on use of construction hoardings to ensure patient, staff and construction safety

Construction projects must preserve a safe, clean and professional environment for the benefit of the general public. They must also create robust and secure work areas for contractors.

All hoarding shall be built in such a fashion so that they will not create or present any health and safety risks for SickKids patients, visitors, or staff. This includes, but is not limited to loose materials, sharp edges, raised nails/screws, or any slip/trip/fall hazards.

Site hoarding should have appropriate site health and safety signage by Constructor (Refer to 6. Figure 5 Sample of Safety Signage by Constructor), construction notices (Refer to 6. Figure 3. Sample of Construction Notices) to inform the public on the construction project number and name, and should contain the contact details of the constructor and the hospital project manager.

2.3.1 Material

All materials used in the construction of hoardings must meet or exceed the requirements specified in CSA Z317.13-17. In addition all materials must meet any OHSA, Ontario Fire Code, and Building Code requirements.

2.3.2 Procedures

a. Refer to the 5c. Hoarding Classification Matrix, filter the project at the **3rd column** as to duration to identify the requirements according to the hoarding classification.
b. Engage Creative Services Studio prior to tendering of the project to determine budget and parties responsible for printing and installation.
c. If contractor/constructor is the responsible party, details such as materials and site-specific instructions are to be included in the tender.

2.3.3 Site Security and Access

The construction hoarding must be designed in such a fashion that it can be secured from unauthorized access when not occupied. Doors should swing into the construction site and whenever possible be equipped with a self-closing mechanism.

2.4 Guidelines on use of construction hoardings to ensure compliance with fire code and hospital policies on use of exits along with Fire Protection Services and the Fire Marshal's Office

SickKids is maintained in accordance with the IAW *Ontario Fire Code*.

Contract documents should identify proper hoarding location by the Consultant prior to tender award.

All components of the fire system, voice communication systems and means of egress shall be maintained in operating condition IAW *Ontario Fire Code** (selected code references have been included)

In the event that there is an impact to the means of egress, fire alarm systems, fire sprinkler systems fire alarm devices or voice communications the hospital Fire Marshal is to be contacted to complete a site review of the area prior to the start of the project.

Alternate measures for access to egress and fire protection will be determined during site review of the area prior to tender documents being issued.

Projects must allow for patient, staff and workers to access a fire exit at all times (refer to Section 2.4.2). In the event that a construction hoarding will restrict or block off a fire exit, the

SickKids Fire Marshal should always be involved in planning for rerouting traffic and providing alternative access points.

Depending on scope of the construction the City Of Toronto Building Inspector may need to be consulted by the Project Manager to confirm the plans being made.

2.4.1 Materials

Materials used for construction hoarding shall be non-combustible and meet or exceed the requirements specified in CSA Z317.13. In addition all materials must meet any OHSA, Ontario Fire Code, and Building Code requirements.
Wherever possible, fire alarm initiating devices will be maintained and active i.e. hoarding must be constructed to not cover fire pull stations, speaker sets, smoke or heat detectors. Construction materials not itemized in the tender documents, which are to be utilized on site, shall be fire rated. The Fire Rating shall be communicated in writing to the Fire Marshal prior to installation.

2.4.2 Procedures

a. Regardless of the type of construction or hoarding requirements of a project, SickKids Fire Marshal shall always be involved in the early planning stages prior to tender should construction hoarding block off fire exits. A signage plan for Exit is required to be completed during the site review.
b. *Ontario Fire Code Selected Reference for Device, Egress and Fire Separations:*

   6.3.1.4 Fire alarm and voice communication systems shall be maintained in operating condition.

   2.2.3.3. Closures in fire separations shall not be obstructed, blocked, wedged open or altered in any way that would prevent the intended operation of the closure.

   2.7.1.7(1) Means of Egress shall be maintained in good repair and free of obstructions.

   7.3.1.1. Smoke control equipment provided in building under the Building Code shall be maintained in a manner to ensure that they are fully operational.

   2.7.1.7. (2) Lighting provided for illumination in exits and access to exits, including corridors used by the public, shall be maintained.

   2.7.3.1. Required exit signs shall be clearly visible and maintained in a clean and legible condition.

   2.7.3.2. Exit signs shall be illuminated, externally or internally, as appropriate for each sign's design, while the building is occupied.

6.3.3.2. (1) Smoke alarms shall be maintained in operating condition by the owner.

2.4.1.1. (1) Combustible waste materials in and around buildings shall not be permitted to accumulate in quantities or locations that will constitute a fire hazard.

2.4.1.1.(2) Combustible materials, other than those for which the location, room or space is designed, shall not be permitted to accumulate in any part of an elevator shaft, means of egress, service room or service space.

6.5.1.5. (1) No obstructions shall be placed so as to interfere with the effectiveness of water discharge from sprinklers.

6.5.1.5. (2) Sprinkler systems shall not be used to support anything that will interfere with effective sprinkler system performance.

3. Project Manager Responsibilities

The Project Manager shall be responsible for the following activities prior to project tender: Filter the project through the most current version of CSA Standard Z317.13 (also refer to IPAC Construction Preventative Measure Analysis) for an initial assessment. Involve all necessary parties to review at the early planning stages of the project and the site and build a Multidisciplinary Team (MDT) to determine the preventative measures and type of hoarding required for the project and relate that information for inclusion in the Tender documents. An example of a MDT can consist of but not limited to Protection Services, Plant Operations, IPAC Construction Safety Officer, Occupational Health & Safety Construction Safety Officer, Risk Management, Creative Services Studio, and Communications & Public Affairs.

- Opportunities for hoarding wraps and need for a wayfinding signage/graphic will have to be well coordinated with Creative Services at the early stages of the project. Refer to Sections 2.2 and 2.3 for more details.

- Identify the location/zone of the renovation and construction project on whether Creative Services Studio and Communications & Public Affairs need to be involved on your specific project, depending on the traffic density (use 6. b. Traffic Density Chart).

- Identify the duration of construction and impacted areas that will be closed off or may impede circulation and/or traffic once hoarding is installed.

After project has been awarded, the Project Manager shall:

- Obtain a hoarding plan and infection control plan from the contractor based on early discussions with the Project Manager, project consultants, and other supporting departments, e.g. IPAC, Protection Services, Occupational Health and Safety

- Ensure that all parties involved will have informed decisions and acceptance of the hoarding layout prior to its installation.

4. Construction Signage

All construction posters and notices will be in accordance with SickKids brand guidelines on colour palettes and font standards, approved by Creative Services. This is in support to keeping up with consistency on SickKids branding image by adhering to the standard style guide and branding policy.

Branding is about defining SickKids and representing our values in a consistent manner. It is about bringing consistency to how we portray our organization and talk about it internally and externally. A strong, simple and consistent brand enhances both impact and efficiency. A strong brand is particularly important for keeping us competitive in attracting support. The client accepts full responsibility to collect/manage/record subject consent and usage of all photos/artwork.

Signage requests for renovation projects must be produced by CPA and CSS teams as early in the process as possible. Design, content, production and installation will follow SickKids brand standards. SickKids Project Manager/Project Coordinator shall contact CSS for signage design/production (Service Floor, Burton, Room S114, ext.206687 or email creativeservices.requests@sickkids.ca).

Please refer to 6. Samples of Notices and Hoarding Wraps for examples of notices, signage, and hoarding wraps.

5. Hoarding Classification

The Hoarding Classification helps define the type of hoarding notices, wayfinding, graphics required.
The determination depends on several factors, including the IPAC Construction Preventative Measure Analysis, Traffic Density, and the Hoarding Duration.

a) IPAC Construction Preventative Measure Analysis

All projects must have the Preventative Measure Analysis (see Table 1) established by the Table 2 Population Risk Group, and Table 3 Construction Activity Type.
General Contractor/Constructor shall reference from the most current version of CSA Z317.13. The final determination of preventative measures required will depend on SickKids Infection Control Risk Assessment.

Table 1: Preventative Measure Analysis – Minimum values
(Taken from CSA Guideline Z317.13 March 2022)

Class of Preventative Measures				
Population Risk Group (from to Table 2)	**Construction Activity Type (from to Table 3)**			
	Type A	**Type B**	**Type C**	**Type D**
Group 1	I	II*	II	III
Group 2	II	II	III	IV
Group 3	II	III*	III	IV
Group 4	II	III*	IV	IV
* denote where a lower level might be used in accordance with Clause 7.5				

Refer to CSA Z317.13 Section 9.7.3 for details

b) Traffic Density Chart

TRAFFIC DENSITY CHART				
	LOCATION (ATRIUM AND ANNEX)	HIGH/PUBLIC	MODERATE	LOW
1.0	**BASEMENT/PARKING**			
1.1	All Floors			■
1.2	Elevator Lobbies	■		
2.0	**SERVICE FLOOR**			
2.1	Elevator Lobbies	■		
2.2	Public Washrooms		■	
2.3	All Other Hallways			■
2.4	All Other Interior Areas			■
3.0	**MAIN FLOOR**			
3.1	Entrance Lobbies/Reception/Admitting	■		
3.2	Main Outside Hallways	■		
3.3	Food Court / Cafeteria	■		
3.4	Main Street	■		
3.5	Retail Shops	■		
3.6	Emergency Department	■		
3.7	Elevator Lobbies	■		
3.8	All Other Hallways		■	
3.9	All Other Interior Areas			■
4.0	**FIRST FLOOR**			
4.1	Muslim Prayer Room		■	
4.2	Elevator Lobbies	■		
4.3	Main Outside Hallways		■	
4.4	All Other Hallways			■
4.5	All Other Interior Areas			■
5.0	**SECOND FLOOR**			
5.1	Meditation Room		■	
5.2	Main Outside Hallways-Bridge and Atrium Only	■		
5.3	Elevator Lobbies	■		
5.4	All Other Hallways			■
5.5	All Other Interior Areas			■
6.0	**THIRD TO EIGHTH FLOOR**			
6.1	Main Outside Hallways-Bridge and Atrium Only	■		
6.2	Elevator Lobbies	■		
6.3	All Other Hallways		■	
6.4	All Other Interior Areas			■
7.0	**NINTH TO ELEVENTH FLOOR**			
7.1	Main Outside Hallways			■
7.2	Elevator Lobbies			■
7.3	All Other Hallways			■
7.4	All Other Interior Areas			■

c) Hoarding Classification Matrix

HOARDING CLASSIFICATION MATRIX
Facility Planning and Development

IPAC Construction Preventative Measure	Traffic	Duration	Notices	Wayfinding signage	Painted Hoarding	Hoarding Graphic Wrap
Preventative Measure I	Low	Less than 3 months				
		3 – 5 months				
		More than 5 months				
	Moderate	Less than 3 months				
		3 – 5 months				
		More than 5 months				
	High / Public	Less than 3 months				
		3 – 5 months				
		More than 5 months				
Preventative Measure II	Low	Less than 3 months				
		3 – 5 months				
		More than 5 months				
	Moderate	Less than 3 months				
		3 – 5 months				
		More than 5 months				
	High / Public	Less than 3 months				
		3 – 5 months				
		More than 5 months				
Preventative Measure III	Low	Less than 3 months				
		3 – 5 months				
		More than 5 months				
	Moderate	Less than 3 months				
		3 – 5 months				
		More than 5 months				
	High / Public	Less than 3 months				
		3 – 5 months				
		More than 5 months				
Preventative Measure IV	Low	Less than 3 months				
		3 – 5 months				
		More than 5 months				
	Moderate	Less than 3 months				
		3 – 5 months				
		More than 5 months				
	High / Public	Less than 3 months				
		3 – 5 months				
		More than 5 months				

Light blue – project dependent, to be reviewed by case
Dark blue – required
White – not required

* Notices include: SickKids Activity Permit, Building Permit (if applicable), Construction Notices, and Posters, etc.

6. Samples of Notices and Hoarding Wraps

Figure 1. Sample of Activity Permit

REDCap

Approved Activity Permit

The Sample activity permit has been approved by the OHS, IPAC, Security, and Fire Safety stakeholders.

Project Information

Sickkids PM	Contractor Name	Contractor Contact
Sample	Sample	____
Sample		____

Description of Activity

Work Location	
Sample	
Scope of Work	
Sample	
Start Date	**Expected Completion**
21-03-2024	21-03-2024

SAMPLE OF COMPLETED ACTIVITY PERMIT

Required Submittals

Liability Insurance & WSIB	Infection Control Preventative Measures
____	____

High-Risk Activities

Afterhours Access	Security assistance required	Fire alarm bypass/Sprinkler drain down
____	____	____
Hot Works Permit	Work in ceiling/Removing of Ceiling Tiles	Specified infection control measures in place
____	____	____
Roof Access Required	Loading Dock Access	Waste bin
____	____	____
Elevators booked/coordinated	Service shutdown	Dust, excessive noise, or odour generating activites
____	____	____
Asbestos or lead present	Designated substances	SDS sent to PM
____	____	____

Approvals

OHS Signature	IPAC Signature	Fire Marshal	Protection Services
Justin De Silva	Krista Cardamone	Randy Wiken	Randy Wiken

OHS Department Contact: 416-813-7654 X 415305
IPAC Department Contact: 416-813-8849 X 408849

Select the "Print" option in your web browser and choose to print to PDF to retain a copy for your records

This Project Activity Permit must be printed & posted in a conspicuous place for the entire project

Figure 2. Sample of Building Permit

TORONTO Building

Toronto and East York District
100 Queen Street West
Toronto, ON M5H 2N2
Tel: 4163927539

BUILDING PERMIT

This card must be kept posted in a conspicuous place on site of construction.

17 150573 BLD 00 BA

Site Address 555 UNIVERSITY AVE
Project Description Hospital;
Interior Alterations
Date Issued Monday May 08, 2017

Ann Borooah
Chief Building Official and
Executive Director

Diane E. Damiano
Deputy Chief Building Official and
Director

Figure 3. Sample of Construction Notices and Posters – Low / Moderate Traffic Density

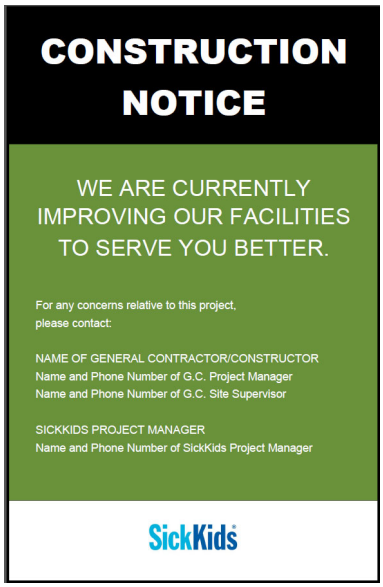

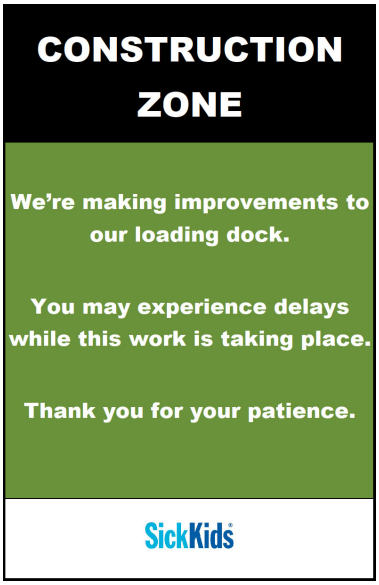

Note: This notice should be explicitly posted in such a way it can be seen from the public area immediately adjacent to the hoarding.
Dimensions of signage may vary from 11"x17" to 36"x24", dependent on location of the signage.

Figure 4. Sample of Wayfinding Signage – Low / Moderate Traffic Density

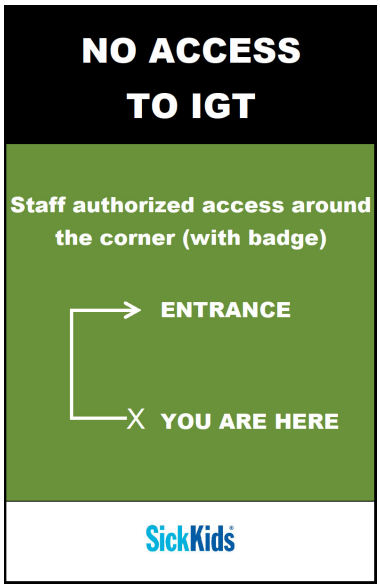

Note: Public notice restricted access to site.
Dimensions of signage may vary from 11"x17" to 36"x24", dependent on location of the signage.

Figure 5. Sample of Safety Signage by Constructor

Figure 6. Sample of Hoarding – Low Traffic Density

Photo from: IGT Project

Figure 7. Sample of Hoarding – Painted in Moderate traffic Area

Figure 8. Sample of Hoarding Wrap – High Density / Public Traffic Area

Photo from: Jimmy The Greek Project

Figure 9. Sample of Hoarding Wrap – High Density / Public Traffic Area

Photo by Communications & Public Affairs

Figure 10. Sample of Wayfinding Graphic – High Density / Public Traffic Area

Graphic by Creative Services Studio

Figure 11. Samples of Construction Notices Graphic – High Density/Public Traffic Area

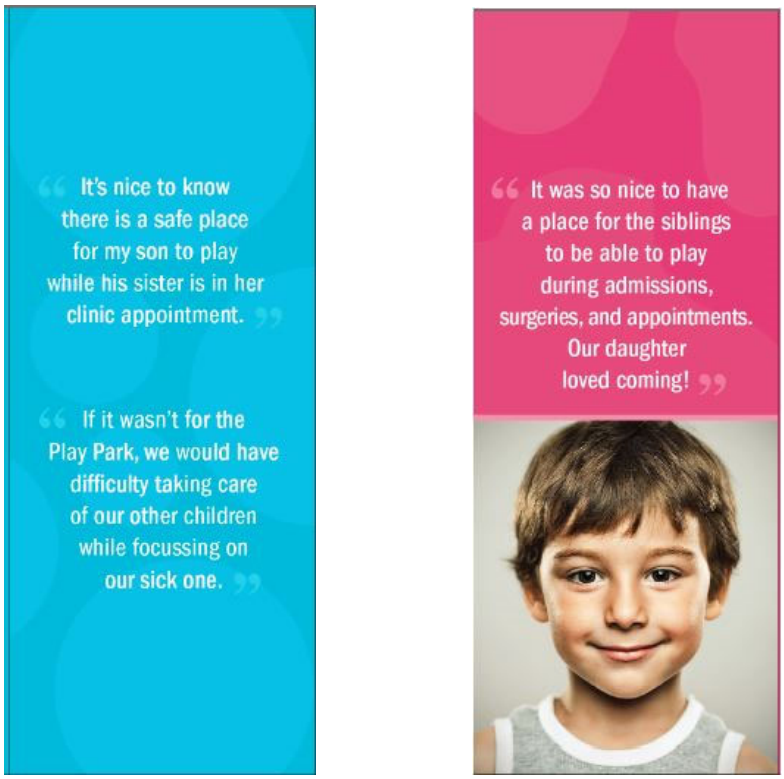

Graphic by Creative Services Studio

Figure 12. Sample of Hoarding Wrap – Opportunities for Promotional Campaign

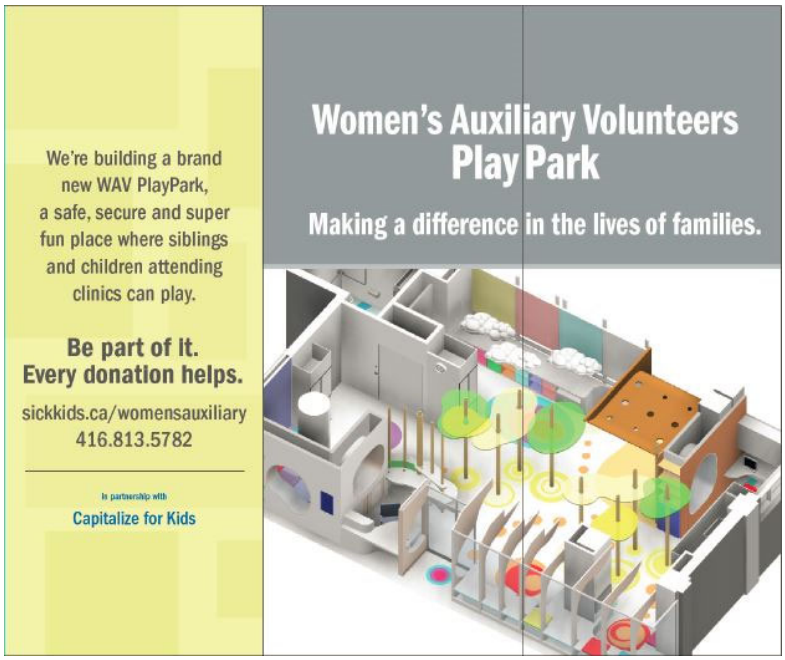

Graphic by Creative Services Studio

Sample of Hoarding Plan and Elevation

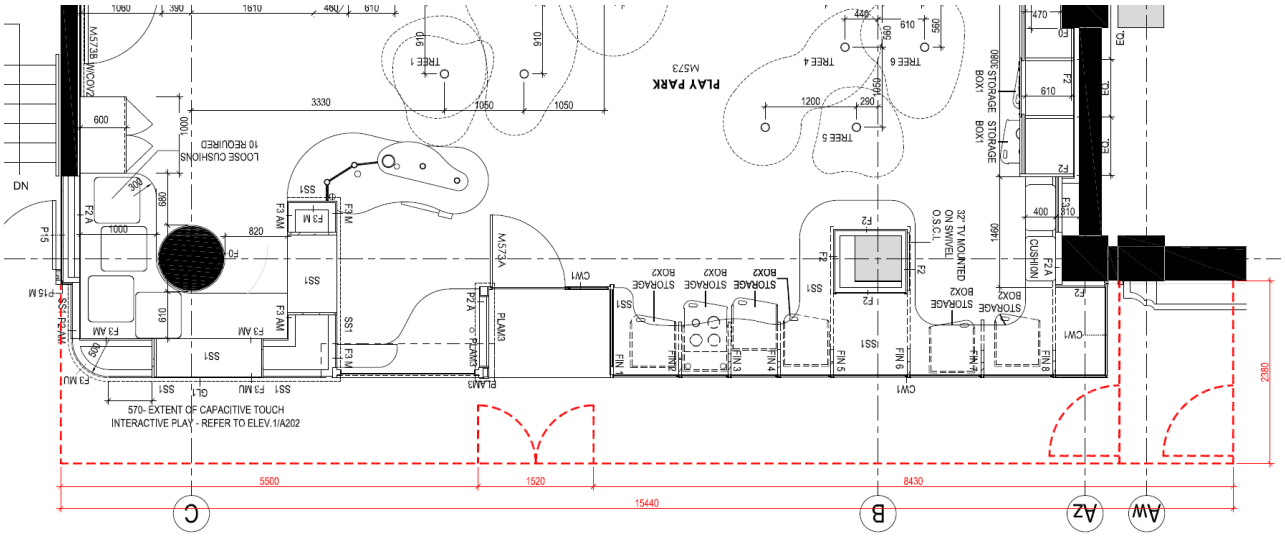

Sample of Hoarding Plan (supplied by Constructor)

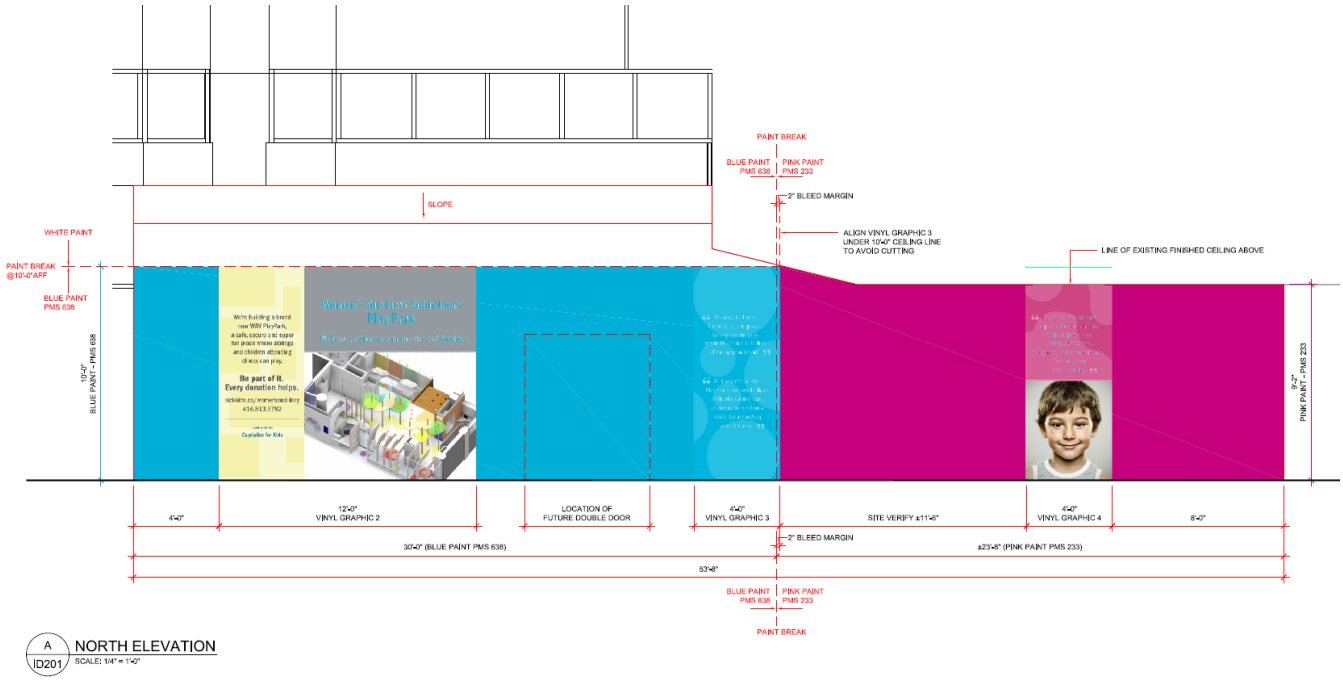

Sample of Hoarding Elevation (supplied by Creative Services Studio)

Appendix H

Guidance Document for Contractors on the use of Containment Carts or Enclosures

SickKids®

Appendix H
Guidance Document for Contractors on the use of Containment Carts

1. Introduction

With any construction, renovation, or maintenance activity dust can be disturbed and can adversely affect the patient population. Without proper precautions, these activities can disperse dust particles contaminated with bacteria and fungi. There are certain circumstances, based on the area and extent of work, and the patient population, that a containment unit can be used. An Infection Control Risk Assessment (ICRA) should be done to determine this, and if additional measures are required. The following guideline was developed to assist contractors to use these effectively and therefore ensure the health and safety of the patients, families, and staff.

Note: If ceiling tiles are visibly contaminated, they shall be accessed as per a repair.

2. Materials required:

- Containment cart
- HEPA filtered vacuum cleaner that can be leak tested.
- Disposable coveralls (for contractors)
  (This is only required if work is directly in an area with patients.)
- Disposable head cover

3. Procedure:

3.1. If in a patient care area, coordinate with clinical manager to relocate patients prior to work commencing.

3.2. Remove or relocate any equipment or supplies in the vicinity of the area to be accessed.

3.3. Conduct a visual inspection of the cart to ensure that it is in good working condition. Check for the following:

- All seals around access door are in good condition.
- Closure operational.
- Upper seal of cart is solid and cleanable. (Note: Foam/sponge is porous and not cleanable. The foam should be encased with a solid compressible impermeable product that can make a seal). Ensure that the cover is intact.
- The interior and exterior are clean. If it is not clean vacuum the interior and exterior
- Unit should be equipped with a HEPA-filtered CAHU.

3.4. Collect all materials/equipment required for the work. Place in cart.

3.5. Transport cart/enclosure to work site.

3.6. Set cart/enclosure in place. Lock brakes.

3.7. Raise sides of cart or enclosure to ceiling. Ensure that there is a tight seal.

3.8. Turn on Vacuum cleaner.

3.9. Put on all PPE – gown/ disposable coveralls, and respirator if required.

3.10. Re-enter cart/enclosure. Seal door/entrance from the interior.
3.11. A HEPA-filtered vacuum shall be applied at the point of removing the ceiling tile or hatch.
3.12. Vacuum the back side of the tile and area around the opening.
3.13. Perform necessary work.
3.14. Replace ceiling tiles.
3.15. Vacuum interior of cart, clothing and shoes and all tools and supplies still in the cart.
3.16. Remove disposable coverall by turning it inside out enclosing the exterior of the gown. Remove head cover.
3.17. Exit cart. Drop sides of cart/enclosure. Place disposable coverall into a plastic bag seal it and discard into clear bag garbage.
3.18. Return cart/enclosure to storage site.

Appendix I

Construction Guidance Document for Work in Areas with the Potential for Q-fever

SickKids®

1.0 Introduction

Since Q–Fever is not a common hazard and there is little procedural information available, the following document has been prepared as guideline to contractors on how to perform work in areas that can be contaminated with the organism causing this disease.

This guideline does not cover major demolition of the Roy C. Hill Wing 7, 8, 9 or major work on the HVAC systems leading from 8, 9. These will require detailed plans on how to perform the work that will have to be developed by a multidisciplinary team.

2.0 Areas requiring precautions:

Area	When precaution are required
7th Floor Roy C. Hill Wing-Fire Zone 5	• Accessing, removing or disturbing old electrical or plumbing conduits • Penetrating or accessing ceiling or wall spaces • Removing wall or ceiling mounted, casework, furniture and fixtures
8th Floor Roy C. Hill Wing-Fire Zone 5	• Accessing, removing or disturbing old electrical or plumbing conduits • Penetrating or accessing ceiling or wall spaces • Removing wall or ceiling mounted, casework, furniture and fixtures • Penetrating accessing or modifying the HVAC system – exhaust side only: ○ EX-10501-06 (F-20) ○ EX-10501-07 (F-21) ○ EX-10501-19 (F-49) ○ EX-10501-18 (F-47)
9th Floor Roy C. Hill Wing-Fire Zone 5	• Accessing, removing or disturbing old electrical conduits • Penetrating or accessing ceiling or wall spaces • Removing wall or ceiling mounted, casework, furniture and fixtures • Penetrating, accessing or modifying the HVAC system – exhaust side only: ○ EX-10501-13 (F-32) ○ EX-10501-04/05 (F-19A/B)
10th Floor Roy C. Hill Wing-Fire Zone 5	• Penetrating, accessing or modifying the HVAC systems that service 8 and 9 Roy C. Hill– exhaust side only: ○ EX-10501-06 (F-20) ○ EX-10501-07 (F-21)

	○ EX-10501-19 (F-49) ○ EX-10501-18 (F-47) ○ EX-10501-13 (F-32) ○ EX-10501-04/05 (F-19A/B)
McMaster First floor and Interstitial spaces	• Penetrating, accessing or modifying the HVAC system – exhaust. Only critical areas are the ducts leading from the old large animal containment area until the HEPA filters which are housed in the 1st floor interstitial space. • The relevant exhaust fans are Number 22 and 23

3.0 Background:

In 1981 an outbreak of Q-fever occurred at the Hospital for Sick Children. Infection was limited to individuals who had direct or indirect exposure to sheep used in research and which were housed and worked with on the 8th and 9th floors of the Roy C. Hill wing. In reading the literature it became evident that this sort of outbreak was not unique to SickKids because other institutions, such as research laboratories, universities, public and private and military facilities had also experienced similar outbreaks.

Q fever poses an occupational hazard to people who work with ungulates (sheep, cows, and goats) and is common in many countries. Cases have been documented after exposure to cats. Workers such as meat inspectors, sheep, cattle and goat farmers, petting zoo staff, stockyard workers etc., in Ontario are at potential risk of exposure and subsequent infection because they work with or near these animals. Infection can be contracted not only through direct exposure to infected animals but through contact with potentially contaminated materials such as straw, wool or hide, dust or by contact with soiled laundry worn by people working with infected animals. In fact the general public is also at risk if they frequent such stockyards farms etc.

3.1 What is Q-Fever?

Q-Fever is caused by a bacterium called Rickettsia. The name of the organism is Coxiella burnetii. Most people infected with this organism do not develop any symptoms. Those individuals who do become ill develop a 'flu-like illness with fever, chills, sweats weakness, severe headache, and generalized discomfort. This usually resolves within 3 weeks, but occasionally fever and headache persist, and may even last as long as 3 months. Pneumonia occurs in many cases. Vomiting and loss of appetite are quite common. In severe cases the liver may be affected and there may be involvement of the heart and major blood vessels. However, almost all cases of this severity have pre-existing abnormalities of the heart valves caused by rheumatic or congenital disease.

3.2 Exposure to Q-Fever

Presently it is not thought to be possible to prevent infection of animals or to cure infected animals with antibiotics. The animals do not become ill when infected but act as carriers of the Q-Fever organism.

This organism loves to grow in placental tissue, so if animal carriers are pregnant they can carry large numbers of organisms in the placenta and amniotic fluid. Therefore, during birth large numbers of organisms are released into the environment.

The Q-Fever organism is very hardy and persists in the soil and dust for many months and even years. Consequently, people may be exposed to Q-Fever by direct contact with sheep, cattle, goats, cats, or by indirect contact with the animal's environment (e.g., the air in barns, soil, dust, wool or hide). The most common way of contracting Q-Fever is by inhaling contaminated dust. (In World War II there were documented cases of Q-Fever in soldiers who had taken cover in or slept in barns that had been previously used to house sheep or cattle).

3.3 Risk of Exposure on the 7th to 9th floors Roy C. Hill Wing

When the animal facility was relocated to the E. McMaster Building, the 8th and 9th floors of the Hill Wing were scheduled as swing space. All surfaces in areas that housed the animals were decontaminated using a proven effective agent. Prior to having anyone occupy the space an open forum was held with the Ministries of Labour, Health, Agriculture and Environment and Energy as well as experts in Rickettsiology from the US Army. The focus of the open forum was to discuss the risks associated with potential transmission of Coxiella burnetii from the environment to occupants of the 8th and 9th floors. The outcome of this forum was that the experts agreed that the risk of acquiring infection from C. burnetii as a result of occupying the space on 8 and 9 Roy C. Hill was highly unlikely. The risk of infection with C. burnetii was less in these areas than in areas outside SickKids, e.g., petting zoos, farms, agricultural fairs etc. The Occupational Hygiene and Safety Team actually occupied the space on the 9th floor for several years and along with other subsequent occupants of 9 Roy C. Hill experienced no seroconversions.

3.4 Ongoing Concerns:

The physical facilities at SickKids on the 7th, 8th, 9th, and 10th floors of the Roy C. Hill Wing are presumed to harbour residual contamination with endospores of Coxiella burnetii. This residual contamination is presumed present in areas of the physical facilities that are not routinely accessed e.g. for the purposes of regular maintenance etc., and have not been surface decontaminated with a chemical disinfectant. These areas would include, but not be limited to, the cavity of concrete block, HVAC systems, electrical, plumbing conduits and ceiling spaces.

It is important to prevent endospores from becoming airborne and posing a potential health threat to, contractors performing work, SickKids employees working in areas

adjacent to the project, or to anyone else who may be working or passing through adjacent areas where work is being conducted. It is also important to prevent the dissemination of this agent to other parts of the environment. The following procedures were developed to minimize this risk.

4.0 Construction /Maintenance limitations:

Construction and maintenance activities are limited to repairs, retrofits or breaches of partitions to provide access/egress for service conduits and/or to relocate necessary services. No major breaches or demolition of horizontal or vertical partitions are permitted.

Health and Safety precautions will be consistent with type 2 asbestos procedures with the addition, under certain circumstances, of 2 applications of a 10% solution of Microchem in water with a 20 minute drying period in-between applications.

5.0 Special Materials and PPE required:

Materials

- HEPA filtered vacuum
- 6 mil polyethylene sheeting
- Microchem (Provided by SickKids)
  Working solution is 10%
  This is made up by adding 1 part Microchem to 9 parts water.
- Sprayer for Michrochem solution
- Duct tape or other tape to use to attach plastic sheeting

PPE:

- N95 disposable Respirator or ½ face respirator with N95- N100 cartridges
- CSA approved chemical splash and impact resistant goggles-
  (A full faced respirator with N95 or better cartridges is equivalent to a respirator and goggles)
- Coveralls- e.g. Full Tyvek™ suits or equivalent

Important- All wearers must pass a fit test for the respirator they will use, prior to coming on site. Testing must be less than two years old.

6.0 Procedures

6.1 Breaching of physical facility horizontal or vertical partitions

e.g. when punching a conduit through from one room to another/from one side of a wall to another or repairing leaking pipes or drains that are in floor, ceiling or wall spaces.

PPE:

- N95 disposable Respirator or ½ face respirator with N95- N100 cartridges
- CSA approved chemical splash and impact resistant goggles-
  (A full faced respirator with N95 or better cartridges is equivalent to a respirator and goggles)
- Coveralls- e.g. Full Tyvek™ suits or equivalent

Materials

- HEPA filtered vacuum
- 6 mil polyethylene sheeting
- Microchem (Provided by SickKids)
  Working solution is 10%
  This is made up by adding 1 part Microchem to 9 parts water.
- Sprayer for Michrochem solution
- Duct tape or other tape to use to attach plastic sheeting

Important- All Wearers must pass a fit test for the respirator they will use

Process:

- Construct an enclosure made of 6 mil polyethylene around the area of penetration with a 3 foot overlapping entrance. An enclosure must be constructed on both sides of the surface through which the penetration will be made.
- Attach a HEPA filtered vacuum to the tent to create negative pressure. The body of the vacuum must be outside the tent/enclosure.
- Deposit all required material inside the enclosure.
- Put on coveralls and respirator- **Remember to conduct a fit check with the respirator on, to ensure there are no leaks.**
- Seal off the over lapping entrance with tape or use one with a zippered closure.
- Perform work
- Seal the surface breach. The enclosure will not be removed and will be kept closed until all physical facility breaches have been resealed and the area cleaned as described below.
- Thoroughly soak all dust and debris with 10 % Microchem
- Package material into yellow waste bags for disposal as biohazardous waste.
  If there is a lot of waste, shovel material into containers. Ensure all material is very wet. Wipe down the surface of the bag and the waste container and place it outside the enclosure.
- Thoroughly vacuum all tools/supplies that can't be wetted with Microchem- Place outside the tent.
- Soak the interior of the enclosure with the Microchem solution
- Wipe down or vacuum the outside of the coveralls.
- Exit from the tent. Tear down the wet enclosure and package into yellow bags.
- Remove respirator and discard. If using a non-disposable respirator package in a plastic bag for future cleaning- Do not reuse the respirator without first cleaning.
- Material in containers can be deposited into the construction waste bin.

- Yellow bag waste should be discarded in to the biohazardous waste. Wash hands and face.

Remember all steps must be performed on both sides of the surface penetration.

6.2 Work above ceiling tiles

There is some risk of the endospores being located above ceiling tiles therefore precautions are required.

PPE:

- N95 disposable Respirator or ½ face respirator with N95- N100 cartridges
- CSA approved chemical splash and impact resistant goggles-
  (A full faced respirator with N95 or better cartridges is equivalent to a respirator and goggles)
- Coveralls e.g. Tyvek™ suits or equivalent

Materials:

- A 10% solution of Microchem- provided by Occupational Health and Safety Services
- 6 mil polyethylene
- duct tape
- HEPA filter vacuum

Process:

- Build polyethylene enclosure around the location where the ceiling will be accessed
- Construct an enclosure made of 6 mil polyethylene where the ceiling will be accessed with a 3 foot overlapping entrance.
- Attach a HEPA filtered vacuum to the tent to create negative pressure. The body of the vacuum must be outside the tent/enclosure.
- Deposit all required material inside the enclosure.
- Put on the coveralls and respirator- **Remember to conduct a fit check with the respirator on, to ensure there are no leaks.**
- Seal off the over lapping entrance with tape
- Perform work
- Replace ceiling tile
- Vacuum the enclosure, yourself and all tools and equipment
- Soak any debris thoroughly with 10%Microchem. Collect into yellow bag waste. Wipe down surface of bag.
- Remove all material from enclosure
- Remove coveralls and leave in enclosure
- Tear down enclosure and package into yellow bag waste.
- Remove dust mist respirator and discard.
- Wash hands and face.

6.3 Attaching support systems to existing walls

This entails drilling through the wall to the cavity. The precautions necessary for this process are:

PPE:
- CSA approved chemical splash and impact resistant goggles
- N95 disposable dust/mist respirator or better

Material required:
- 10% Microchem

Process:
- **Drill into the wall;**
- **While reversing the drill, soak the bit with a 10% solution of Microchem ;**
- **Once the drill bit is removed from the wall, soak the area around the newly created hole with the 10% solution of Microchem then immediately install the toggle bolt.**

6.4 Furniture, casework, removal from walls.

When furniture or casework is being removed from walls, e.g. screws or toggle bolts are being taken out and the furniture is removed from the walls, the process should be relatively non-dusty, however precautions must still be followed.

PPE:
- CSA approved chemical splash and impact resistant goggles
- N95 disposable dust/mist respirator or better
- Coveralls- Optional

Material required:
- 10% Microchem

Process:
- Put on dust/mist respirator- **Remember to conduct a fit check with the respirator on, to ensure there are no leaks.**
- Put on goggles
- Optional - put on coveralls
- Remove casework from wall. Soak areas around hole with 10 % Microchem
- Plug hole immediately
- Coat surfaces of the casework that have been against the walls with 10 % Microchem. Allow to dry twenty minutes, and wet again.
- Remove PPE and wash face and hands
- Discard material into construction waste bin

6.5 Pulling wires and pipes through existing conduits

Note: Precautions are only required for conduits that were in place before 1985.
All surface mounted conduits/chases are clean and no special requirements are needed as they were installed post surface decontamination with a chemical disinfectant.

Process:

- Follow the steps described for working above ceiling tiles.
- Important - an enclosure is required on either end of the conduit through which material will be pulled or pushed.

6.6 Adjustment, modification and disturbance of the HVAC system

Any minor adjustments to air exhaust systems e.g. lubrication of fans damper adjustments should be performed wearing at minimum an N-95 respirator.

Any work requiring removal of ducts, major opening /cutting into ducts or other modifications must be discussed with the Project Lead. The Project lead will consult with an occupational hygienist and other key players to determine what containment strategies can be used and whether the modifications can be made without creating a hazardous situation for workers, occupants and staff.

Prepared by: Occupational Health and Safety Services and Laboratory Risk Management

Appendix J

Roof Access Procedures & Requirements

SickKids®

ROOF ACCESS PROCEDURES & REQUIREMENTS

Contractors / Constructors accessing any roof area is required to comply with all applicable Federal, Provincial and Municipal Acts and Regulations including but not limited to: Occupational Health & Safety Act, Workplace Safety and Insurance Act and the Environmental Protection Act

Contractors requiring access to any roof area must follow the procedures outlined below. The purpose of this procedure is to ensure that no material, equipment, tools or debris remain on the roof work site area that may be at risk of descending from the roof by high winds or helicopter approach/take-off. The roof work area is to be kept in a safe condition at all times.

A. Prior to starting work on roof areas at any of the SickKids Buildings consisting of the Atrium, Annex and the McMaster Building, the contractor must submit a completed Roof Work Review Form, with section 1 completed, to Plant Operations by 1300hrs of the previous working day requiring access onto the roof

B. The day of required roof access, the contractor shall sign-in on the Contractor Sign-In/Out Board and identify they will be performing work on the roof area. The contractor will then contact the Plant Operation's Building Operator to ensure the Roof Work Review Form has been authorized and arrange for access onto the roof. The Roof Work Review Form will be placed in the form tray located next to the Contractor Sign-In/Out Board

C. When working on the roof area, the Contractor is to secure or store all material, equipment, tools or debris in a manner in which it will not be at risk of descending from the roof area due to placement of items to close to the edge of roof, high winds, helicopter approach/take-off, etc.

D. After each day at the completion of work and prior to leaving the site, the contractor is to sign out at the Contractor Sign- In/Out Board. They are to retrieve their Roof Work Review Form and complete section 2 of the form. The contractor will then contact the Plant Operation's Building Operator to perform a review of the roof work area as a secondary check that no material, equipment, tools or debris remain on the roof work site area and express any concerns they may have

E. Once the roof work area has been reviewed and the Plant Operation's Building Operator has no concerns, the Plant Operation's Building Operator will sign off the Roof Work Inspection Form, complete with time and date. The Plant Operation's Building Operator shall then submit the form in the Building Operator's Supervisor's tray in Room B117 of the Burton Wing and the Contractor's obligations for the day is completed.

Review of the roof work area by the Facilities Operation's Building Operator does not relieve the contractor of any responsibilities of possible issues resulting from the contractor's work on the roof area.

Appendix K

Confined Space Program

SickKids®

Confined Space Program

This is a CONTROLLED document for internal use only, valid only if accessed from the Policies and Procedures site.

1.0 Introduction

This program was developed to ensure that workers entering, working in or near a confined space are protected and to ensure compliance with the confined space provisions in O. Reg. 632/05- Confined Spaces made under the Occupational Health and Safety Act of Ontario.

2.0 Policy

The program applies to confined space entry in all facilities owned and operated by the Hospital for Sick Children (SickKids). All staff, contractors and sub-contractors who enter confined spaces and related work on SickKids property must meet or exceed the requirements of this program.

3.0 Definitions

Atmospheric hazard:

a. the accumulation of flammable, combustible or explosive agents,
b. an oxygen content in the atmosphere that is less than 19.5 per cent or more than 23 per cent by volume, or
c. the accumulation of atmospheric contaminants, including gases, vapours, fumes, dusts or mists, that could,
   i. result in acute health effects that pose an immediate threat to life, or
   ii. interfere with a person's ability to escape unaided from a confined space.

Cold work: work that cannot produce a source of ignition (e.g. valve adjustment, inspections, etc.).

Competent person: a person who,

a. is qualified because of knowledge, training and experience to organize the work and its performance,
b. is familiar with this Act and the regulations that apply to the work, and
c. has knowledge of any potential or actual danger to health or safety in the workplace.

Confined space: a fully or partially enclosed space,

a. that is not both designed and constructed for continuous human occupancy, AND
b. in which atmospheric hazards may occur because of its construction, location or contents or because of work that is done in it.

Continuous human occupancy: a space that has been:

a. designed and constructed in accordance with recognized codes and standards (e.g. Ontario Building Code, Ontario Fire Code, etc.), and
b. contains provisions to make the space suitable for humans to occupy (e.g. provisions for structural adequacy, access, egress, ventilation, and lighting so that a person could continually occupy that space).

Hot work: work that could produce a source of ignition such as a spark or open flame (e.g. cutting, grinding, welding, using non-explosion proof electrical equipment, etc.).

©The Hospital for Sick Children ("SickKids"). All Rights Reserved. This document was developed solely for use at SickKids. SickKids accepts no responsibility for use of this material by any person or organization not associated with SickKids. A printed copy of this document may not reflect the current, electronic version on the SickKids Intranet. Use of this document in any setting must be subject to the professional judgment of the user. No part of the document should be used for publication without prior written consent of SickKids.

Purging: to remove contaminants inside the confined space by displacement of air to achieve acceptable atmospheric levels.

Ventilation: the continuous provision of fresh air into the confined space by mechanical means to maintain acceptable atmospheric levels.

Related work: work that is performed near a confined space in direct support of work inside the confined space.

4.0 Responsibilities

Occupational Health and Safety Services is responsible for:
- Developing, maintaining and coordinating an annual review of the written program, in consultation with Facilities and Patient Support Services and the Joint Occupational Health and Safety Committee (JOHSC).
- Assisting Facilities and Patient Support Services with recognizing confined spaces, assessing the hazards, and developing the plan, if required.

Facilities and Patient Support Services is responsible for:
- Contracting a competent person and workers who are knowledgeable, trained and experienced to conduct confined space entry.
- Confirming that contractors entering confined spaces and related work on SickKids' property have a written confined space program that meets or exceeds the legal requirements.
- Upon request, providing a copy of the SickKids' confined space program to the contractors.
- Providing information to the contractors on hazards that are unique to SickKids (e.g. location of asbestos or other designated substances, presence of biological agents, etc.).
- Requesting and retaining the necessary documents from the contractors.
- Preparing a coordination document for confined space entry, if applicable.

All contractors and sub-contractors are responsible for:
- Complying with the confined space provisions in the O. Reg. 632/05 - Confined Spaces.
- Meeting or exceeding the requirements of the SickKids' confined space program.

5.0 Recognition of Confined Spaces

5.1 Recognized Confined Spaces at SickKids

The following are examples of spaces on SickKids' property that are not both designed and constructed for continuous human occupancy and where an atmospheric hazard may occur during work that normally occurs in these spaces. All confined space procedures must be followed if entry into these spaces is required.

- Sump pits containing surface water and/or connected to the storm or sanitary sewer
- Domestic hot water tanks
- Diesel fuel storage tanks
- Medical vacuum tanks
- Underground utility vault, northwest corner Annex, service level, access by outside manhole
- Incinerators (no longer in use) located in Annex

5.2 Potential Confined Spaces at SickKids (Based on Work Performed)

©The Hospital for Sick Children ("SickKids"). All Rights Reserved. This document was developed solely for use at SickKids. SickKids accepts no responsibility for use of this material by any person or organization not associated with SickKids. A printed copy of this document may not reflect the current, electronic version on the SickKids Intranet. Use of this document in any setting must be subject to the professional judgment of the user. No part of the document should be used for publication without prior written consent of SickKids.

The following are examples of spaces on SickKids' property that are not designed and constructed for continuous human occupancy; however, atmospheric hazards are not likely during routine work performed by SickKids employees in the space. Routine work includes inspection, filter replacement or minor repairs involving tools that do not generate contaminants (e.g., wrenches, screwdrivers, etc.).

- Air handling units
- Duct shafts
- Cooling tower sump
- Elevator pits
- Interstitial spaces

These areas, however, will be considered confined spaces if hazardous chemical products are used or if work that causes an accumulation of contaminants is conducted in or in the vicinity of this space. Examples include, but are not limited to: welding, cutting, grinding; the use of propane, gasoline, or diesel powered equipment; chemical coil cleaning; other chemical cleaning or degreasing; painting; etc. In these situations, a competent person must conduct a hazard assessment before work begins.

5.3 General Recognition of Confined Spaces
SickKids' managers/supervisors who identify or are considering access into any space that is not both designed and constructed for human occupancy must ensure that a hazard assessment is conducted by a competent person to determine if an atmospheric hazard may occur. Refer to section 7.0 for details on the hazard assessment.

Examples of potential confined spaces include:

- Trenches, wells, pits, excavations, pumping stations, process or pressure vessels
- Sewers, tunnels, ducts, manholes, pipes, pump wells, degreasers and similar structures
- Storage tanks, tank-like compartments, vessels, vats, caisson, bins, silos, vaults
- Ducts, chutes, holes, flues, chimneys, ovens, furnaces, boilers, underground vaults, water reservoirs, or any space with only a manhole for entry.

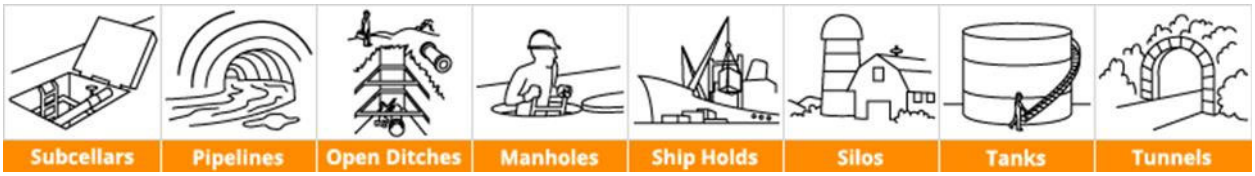

5.4 Rooms Not Considered Confined Spaces
The following are examples of SickKids' spaces that are both designed and constructed for human occupancy and are not considered to be confined spaces. Atmospheric or other hazards may occur and will be controlled in accordance with applicable health and safety legislation and good occupational hygiene and safety practices.

- Mechanical rooms
- Walk-in freezers and refrigerators
- Service corridors accessed through doors
- Flammable storage rooms
- Dark rooms

6.0 Authorized Entry, Attendant and Communication

©The Hospital for Sick Children ("SickKids"). All Rights Reserved. This document was developed solely for use at SickKids. SickKids accepts no responsibility for use of this material by any person or organization not associated with SickKids. A printed copy of this document may not reflect the current, electronic version on the SickKids Intranet. Use of this document in any setting must be subject to the professional judgment of the user. No part of the document should be used for publication without prior written consent of SickKids.

SickKids' employees will not enter any confined space. Only contracted staff with the knowledge, training and experience related to confined spaces may enter confined spaces.

Unauthorized entry into the confined spaces identified above is prevented since these spaces are accessed by a manhole, grate or other cover only after removing the cover using a tool.

During a confined space entry and while workers are in the space, the contractor will ensure an attendant has control over access. The contractor will provide an acceptable means of access and egress for all workers (e.g. ladders or other suitable means). The contractor will also prevent unauthorized or accidental entry into the space by using a barricade and a warning sign that indicates unauthorized entry is prohibited. For example, the sign may read:

DANGER
CONFINED SPACE
KEEP OUT UNLESS AUTHORIZED
PERMIT REQUIRED

An attendant must be present whenever a worker enters a confined space. The attendant is not allowed to enter the confined space, unless he or she is replaced by another attendant in accordance with the plan.

Attendants must follow these requirements:

- Remain alert outside and near to the entrance of the confined space at all times.
- Be in constant communication (visual or speech) with all workers in the confined space.
- Monitor the safety of workers inside the confined space.
- Provide assistance as necessary (except rescue).
- Have a device for summoning help in case of emergency (device must be provided).
- Initiate an adequate rescue procedure in case of an emergency.
- Never enter the confined space for any reason
- Never leave the opening of the confined space while workers are inside
- Not perform other work which may distract / interfere with their primary duty of monitoring the workers inside the confined space.

Should worker(s) leave a confined space for a short time (for example, coffee break, getting additional material for their work), the confined space should be re-tested before the worker re-enters.

The attendant must have a means of summoning rescue assistance, if necessary, without having to leave the entrance to the space. The contractor must establish communication procedures and provide any necessary equipment (e.g., walkie-talkies, cell phone, distress alarm, or other appropriate means).

Workers in the confine space must follow these requirements:

a) Do not enter or re-enter (if the confined space has been left unoccupied and unattended) the confined space unless atmospheric testing has been performed.

b) Know the hazards that may be faced upon entry. Know the routes of exposure (e.g., inhalation or skin absorption), signs and symptoms, and long-term effects of exposure.

c) Know how to use the equipment (including personal protective equipment and tools) properly.

©The Hospital for Sick Children ("SickKids"). All Rights Reserved. This document was developed solely for use at SickKids. SickKids accepts no responsibility for use of this material by any person or organization not associated with SickKids. A printed copy of this document may not reflect the current, electronic version on the SickKids Intranet. Use of this document in any setting must be subject to the professional judgment of the user. No part of the document should be used for publication without prior written consent of SickKids.

d) Maintain communication with the attendant so that the attendant can monitor your safety and be able to alert workers to evacuate the confined space.

e) Alert the attendant whenever

- you recognize any warning sign or symptom of exposure
- you see a dangerous condition
- an alarm is activated.

f) Get out of the permit space immediately whenever

- a warning system indicating a ventilation failure is activated
- the attendant gives an evacuation order
- a worker recognizes any signs or symptoms of exposure
- a person inside detects a dangerous condition
- an evacuation alarm is activated.

If the size of the space is such that voice contact will be lost between the attendant and the workers inside the space, appropriate communication devices must be used. This may include intrinsically safe walkie-talkies, alarms, etc.

7.0 Hazard Assessment

If SickKids' staff identify or are considering access into a space that is not designed or constructed for human occupancy (or as described in section 5.3), they must ensure that a hazard assessment is conducted by a competent person to determine if an atmospheric hazard may occur **before any work begins**. An occupational hygienist may be contacted for assistance. If an atmospheric hazard may occur, this is a confined space and the entry will be conducted only by contractors who are knowledgeable, trained and experienced in confined space entry.

The contractor must assess the confined space for all hazards and develop a plan with specific measures to eliminate or control the hazards during entry.

Before a worker enters a confined space the contractor's competent person shall ensure that an adequate assessment of the hazards related to the confined space has been carried out by a person with adequate knowledge, training and experience. This person must consider:

a. The hazards that may exist due to the design, construction, location, use or contents of the confined space; and
b. The hazards that may develop while work is done inside the confined space.

Hazards include, but are not limited to:

- Oxygen deficiency or oxygen enrichment
- Flammable, combustible or explosive agents
- Contaminants including smoke, fumes, dusts exceeding occupational exposure limits (OELs)
- Residual chemicals or hazardous materials
- Ignition hazards, including hot work, tools and other potential sources of ignition
- Chemical contact hazards, including acids and alkalis
- Physical hazards such as mechanical hazards, thermal stress, humidity, radiation, noise and vibration, working/walking surfaces, engulfing materials, physical obstacles, poor visibility
- Electrical hazards, including lines and cables, exposed terminals
- Traffic hazards, including pedestrians or mobile equipment
- Biological hazards, including animals and biological agents

©The Hospital for Sick Children ("SickKids"). All Rights Reserved. This document was developed solely for use at SickKids. SickKids accepts no responsibility for use of this material by any person or organization not associated with SickKids. A printed copy of this document may not reflect the current, electronic version on the SickKids Intranet. Use of this document in any setting must be subject to the professional judgment of the user. No part of the document should be used for publication without prior written consent of SickKids.

- Other hazards such as piping or distribution systems, pressurizing fluids, uncontrolled energy (e.g. water, liquid, vapour, electric, magnetic, gaseous, etc.), limited access and egress

If two or more confined spaces are of similar construction and present the same hazards, the contractor may record the assessments in a single document, but must clearly identify each space.

The contractor must ensure that the assessment is reviewed as often as necessary to ensure the plan remains relevant and must provide Facilities and Patient Support Services staff with a copy of all assessments and updates.

Facilities and Patient Support Services will retain copies of the assessment and provide this information to Occupational Health and Safety Services (OHSS) and the Joint Occupational Health and Safety Committee (JOHSC), upon request. If a construction project, the contractor will provide copies of the assessment to the project's Joint Occupational Health and Safety Committee (JOHSC), if any, or every worker who performs work to which the assessment relates if there is no Joint Occupational Health and Safety Committee (JOHSC), upon request.

Appendix A includes a sample hazard assessment form.

8.0 Confined Space Entry Plan

Before any worker enters a confined space, the contractor's competent person shall ensure that an adequate written plan, including procedures for the control of hazards identified in the assessment, has been developed and implemented for the confined space. The plan must define the specific measures and procedures to control the hazards identified in the assessment for that confined space to allow workers to enter and work safely. The plan must include details on:

a. the duties of workers;
b. coordination with other contractors, if applicable (see below for details);
c. on-site rescue procedures;
d. rescue equipment and methods of communication;
e. personal protective equipment, clothing and devices;
f. isolation of energy and control of materials movement (e.g. lockout/tagout procedures);
g. attendants (including name of all attendants);
h. adequate means for entering and exiting;
i. information on flammable or combustible materials;
j. atmospheric testing;
k. adequate procedures for working in the presence of explosive or flammable substances; and
l. ventilation and purging.

One plan may deal with two or more confined spaces that are of similar construction and present the same hazards as identified by the assessment.

The contractor must ensure that the plan is reviewed as often as is necessary to ensure that it remains adequate.

The contractor must provide any updates to the plan or assessment, in writing, to SickKids' staff.

Appendix B includes a sample plan.

©The Hospital for Sick Children ("SickKids"). All Rights Reserved. This document was developed solely for use at SickKids. SickKids accepts no responsibility for use of this material by any person or organization not associated with SickKids. A printed copy of this document may not reflect the current, electronic version on the SickKids Intranet. Use of this document in any setting must be subject to the professional judgment of the user. No part of the document should be used for publication without prior written consent of SickKids.

9.0 Training

Facilities and Patient Support Services will train all employees to recognize confined spaces and instruct employees that confined space entry will be conducted only by qualified contractors.

Any SickKids' staff member who contracts for the services of any individual or company to perform confined space entry and related work must be considered a “competent person” and must have received general awareness training on confined space entry.

Every contracted worker who works in, or in the vicinity of, a confined space or performs related work must be adequately trained in the recognition of hazards associated with confined spaces and must have received training to be able to safely perform this work. This includes all workers entering the space or related work (e.g. attendants, rescue workers, etc.). This training must include both general confined space awareness training, including the recognition of hazards within a confined space, related work, and plan-specific training to ensure workers work safely and properly in the confined space.

The plan-specific training must include:

a. The recognition and identification of potential hazards associated with the space.
b. The evaluation and control procedures for identified or potential hazards.
c. The set-up, use and limitations of all equipment such as ventilation (blowers), harnesses, tripods, atmospheric monitors, personal protective equipment (e.g. respirators), etc. that will be used while in the confined space. This training should be hands-on.
d. Communication systems and retrieval systems (set-up and operation)
e. All procedures for entering the space and related work and to be followed in the event of an emergency or if a situation with additional risk to workers arises.
f. The specific work to be done while in the confined space.
g. Workers with emergency rescue responsibilities need training related to the rescue.

The contractor must provide SickKids with proof of training, including:

a. A copy of a general awareness training certificate, indicating the trainer and a description of the training competencies that were assessed.
b. A written record of the plan-specific training. This record may be incorporated into the plan and/or the entry permit.

10.0 Entry Permit System

The contractor must ensure that a separate entry permit is issued each time work is to be performed in a confined space and before any worker enters the confined space. The entry permit must be signed and dated and the name of person signing the permit must also be printed clearly.

An entry permit must be completed and kept on-site during the entry. It must include:

a. The location of the confined space.
b. A description of the work to be performed.
c. A description of the hazards and the corresponding control measures.
d. The time period for which the entry permit applies.
e. The name of the attendant.
f. A record of each worker’s entries and exits.
g. A list of the equipment required for entry and rescue, and verification that the equipment is in good working order (e.g. calibration date and person calibrating the equipment).

©The Hospital for Sick Children ("SickKids"). All Rights Reserved. This document was developed solely for use at SickKids. SickKids accepts no responsibility for use of this material by any person or organization not associated with SickKids. A printed copy of this document may not reflect the current, electronic version on the SickKids Intranet. Use of this document in any setting must be subject to the professional judgment of the user. No part of the document should be used for publication without prior written consent of SickKids.

h. Results obtained in atmospheric testing.
i. If the work to be performed in the confined space includes hot work, adequate provisions for the hot work and corresponding control measures.

Before each shift, the contractor's competent person must:

a. Confirm the hazard assessment of the space is relevant and accurate.
b. Confirm the plan for the confined space and assessed hazards is relevant and accurate.
c. Complete a new entry permit to comply with the relevant plan.

The employer shall ensure that the entry permit, during the time period for which it applies, is readily available to every person who enters the confined space and to every person who performs related work with respect to the confined space.

Appendix D includes a sample entry permit.

11.0 Atmospheric Testing

The contractor must appoint a person with adequate knowledge, training and experience to safely perform tests to ensure that acceptable atmospheric levels are maintained in the confined space in accordance with the plan. Testing must be conducted using calibrated instruments, in good working order and appropriate for the hazards. Testing includes monitoring for oxygen deficiency, oxygen enrichment, the accumulation of flammable or combustible vapours, and/or the accumulation of other atmospheric contaminant.

Testing must be conducted before a worker enters the space; as often as necessary while a worker is in the space; and before a worker re-enters, if the space has been both unoccupied and unattended.

The contractor will provide SickKids with:

- A copy of all monitoring results (i.e., a record of every sample taken)
- Details on the calibration of all equipment

12.0 Ventilation and Purging

If atmospheric hazards exist or are likely to exist in a confined space, the contractor will ensure that confined space is purged, ventilated or both, before any worker enters it, and will maintain an acceptable atmospheric level while any worker is inside.

If mechanical ventilation is required to maintain acceptable atmospheric levels, the contractor will implement an adequate warning system and exit procedure to ensure that workers have adequate warning of ventilation failure and are able to exit the confined space safely.

Hot work may be performed only if the precautions outlined in the Regulation for Confined Spaces are followed.

The contractor will use adequate respiratory protection and/or any other equipment to protect the safety of all workers. This equipment must also be inspected and used in accordance with all applicable legislation and standards.

©The Hospital for Sick Children ("SickKids"). All Rights Reserved. This document was developed solely for use at SickKids. SickKids accepts no responsibility for use of this material by any person or organization not associated with SickKids. A printed copy of this document may not reflect the current, electronic version on the SickKids Intranet. Use of this document in any setting must be subject to the professional judgment of the user. No part of the document should be used for publication without prior written consent of SickKids.

13.0 On-site Rescue

The contractor will not use 911 emergency services or SickKids staff as on-site rescuers.

The attendant cannot be a rescuer unless replaced by another adequately trained individual.

The contractor will provide SickKids with:

- The written details of the on-site rescue procedures relevant to the confined space plan
- The rescue equipment inspection records
- Proof of training of all on-site rescue personnel

Proof of training should include:

- Certificate (or other proof) of first aid and CPR (cardiopulmonary resuscitation) training
- Details related to training on the rescue procedures and equipment for the relevant plan

14.0 Coordination Document

If Facilities and Patient Support Services contracts for the services of one or more independent contractors to conduct work in or related to the same confined space, a “competent person” in Facilities and Patient Support Services will prepare the coordination document to ensure that the work is performed safely. Facilities and Patient Support Services will provide a copy of the coordination document to all contractors and all contractors must comply with the provisions in this document. A copy of the coordination document will also be provided to the hospital's Joint Occupational Health and Safety Committee (JOHSC) and each contractor's Joint Occupational Health and Safety Committee (JOHSC), if any.

For construction projects, the constructor will prepare and distribute the coordination document to all contractors. A copy of the coordination document will also be provided to the projects Joint Occupational Health and Safety Committee (JOHSC), if any.

Appendix C includes a Sample Coordination Document

15.0 Retention of Documents

Facilities and Patient Support Services will provide the contractor with a copy of the confined space program; the coordination document, if applicable; documents related to previous confined space entry in the relevant space (if available); and any applicable information on hazards unique to the confine space at SickKids (e.g., any designated substances, including asbestos, present in or near the space; biological agents; etc.).

The contractor will provide Facilities and Patient Support Services with information related to the hazard assessment, plan, entry permit, rescue procedures, training records and atmospheric testing, as indicated in the program.

Appendix E includes a Confined Space Documentation Checklist

Facilities and Patient Support Services will retain the above documents for at least one year after they are created. Facilities and Patient Support Services will also retain the two most recent records for every space.

©The Hospital for Sick Children ("SickKids"). All Rights Reserved. This document was developed solely for use at SickKids. SickKids accepts no responsibility for use of this material by any person or organization not associated with SickKids. A printed copy of this document may not reflect the current, electronic version on the SickKids Intranet. Use of this document in any setting must be subject to the professional judgment of the user. No part of the document should be used for publication without prior written consent of SickKids.

16.0 Program Review

Occupational Health and Safety Services (OHSS) will coordinate an annual review of the confined space program, in consultation with Facilities and Patient Support Services and the Joint Occupational Health and Safety Committee (JOHSC). In addition, the contractor's confined space procedures and performance with be evaluated by Facilities and Patient Support Services following each confined space entry.

Following the annual review, the confined space program will be revised, if necessary.

17.0 References

Ontario Regulation 632/05 - Confined Spaces made under the Occupational Health and Safety Act.

https://www.ihsa.ca/rtf/health_safety_manual/pdfs/hazards/Confined_Spaces.pdf

Attachments:

Appendix A Sample Hazard Assessment.doc

Appendix B Sample Plan.doc

Appendix C Sample Coordination Document.doc

Appendix D Sample Entry Permit.doc

Appendix E Checklist.doc

©The Hospital for Sick Children ("SickKids"). All Rights Reserved. This document was developed solely for use at SickKids. SickKids accepts no responsibility for use of this material by any person or organization not associated with SickKids. A printed copy of this document may not reflect the current, electronic version on the SickKids Intranet. Use of this document in any setting must be subject to the professional judgment of the user. No part of the document should be used for publication without prior written consent of SickKids.

Appendix L

PGCRL Indoor Air Quality Management Program Plan

SickKids®

PGCRL Indoor Air Quality Management Program Plan

This is a CONTROLLED document for internal use only, valid only if accessed from the Policies and Procedures site.

1.0 Objective

The Hospital for Sick Children (SickKids) is committed to a socially responsible work environment that contributes to a safe, healthy and ecologically efficient environment and healthier planet. SickKids' approach to greening is innovative and evident through practices and policies, including the procurement and delivery of environmentally-safe products and services, the promotion of efficient us of energy and resources, the reduction of waste and pollution, improvements to hazardous waste disposal and the greening of the SickKids workplace. SickKids commitment to the environment extends to patients and their families, staff and the community. See SickKids Environmental Policy.

Supporting SickKids commitment, the Indoor Air Quality Management Plan outlines a program at Peter Gilgan Centre for Research and Learning (PGCRL) that enhances the indoor air quality (IAQ) by optimizing practices to prevent the development of IAQ issues and maintain the well-being of patients, their families, staff, contractors and the community.

2.0 Scope

IAQ is a critical component of providing a healthy and comfortable indoor environment at PGCRL located at 686 Bay Street, Toronto, Ontario. This plan consists of practices to prevent the development of IAQ problems in the building, correcting IAQ problems when they occur and maintaining the well-being of the patients and their families, staff, and visitors at PGCRL. The plan also includes construction and renovation practices to prevent IAQ issues. It identifies applicable portions of the Sheet Metal and Air Conditioning National Contractors Association (SMACNA) guidelines to be adhered to in the building whenever facility alterations and additions activities are underway.

The plan shall comply, where possible, with Leadership in Energy and Environmental Design (LEED) for Existing Buildings: Operations and Maintenance (EBOM) Indoor Environmental Quality (IEQ) credits:

- IEQ1.1: IAQ Management Program
- IEQ1.5: IAQ Management for Facility Alterations and Additions

The plan is based on the U.S. Environmental Protection Agency's (EPA) Indoor Air Quality Building Education and Assessment Model (I-BEAM). The practices in this plan align with SickKids' Resolution of Indoor Quality Issues and Smell/Odour Incidents procedure and the Master Contractor Safety Framework. The framework is enabled by the Contractor Safety Policy.

The IAQ Management Program will strive to enhance IAQ through the following strategies and practices:

©The Hospital for Sick Children ("SickKids"). All Rights Reserved. This document was developed solely for use at SickKids. SickKids accepts no responsibility for use of this material by any person or organization not associated with SickKids. A printed copy of this document may not reflect the current, electronic version on the SickKids Intranet. Use of this document in any setting must be subject to the professional judgment of the user. No part of the document should be used for publication without prior written consent of SickKids.

- Conduct IAQ building audits and inspections. The annual audit will include an assessment of PGCRL's indoor spaces, building exterior and heating ventilation and air conditioning (HVAC). The IAQ audit will be based on I-BEAM. PGCRL Joint Health and Safety Committee (JOHSC) with support from the Neighbourhood Operations and Safety Committees (NOSC) shall perform the inspections of indoor spaces.
- Diagnose and resolve IAQ-related health problems. IAQ related issues will be identified via the I-BEAM based audit and JOHSC/NOSC inspections, and potential causes investigated and addressed. A measurement of thermal comfort, light, carbon dioxide and monoxide, relative humidity and level of contaminant will be taken to assess whether the IAQ-related problems were addressed.
- Practices to reduce IAQ risks. A maintenance program consisting of scheduled and unscheduled equipment maintenance, and of continuous monitoring and alarm system of the building, its equipment and environment including CO_2 and filter issues.
- Protecting staff, patients, families, visitors and contractors from exposures to construction and renovation contaminants by meeting, where possible, LEED IEQc1.5 requirements.
- Electronic collection systems @yourservice (Archibus), Safety Reporting System and Occupational Health and Safety Services (OHSS), for gathering occupants' feedback about IAQ related issues and addressing them.

3.0 Performance Evaluation

This plan will be evaluated by the responsible parties identified in section 5. The evaluation will be based on the @yourservice (Archibus), Safety Reporting and OHSS IAQ related issues and the complaint and response information in these systems.

4.0 Quality Assurance/Quality Control Processes

The following methods will be used to assure the ongoing implementation and success of the program:

1. Evaluation of the complaint and response information in the electronic collection systems @yourservice (Archibus), Safety Reporting and OHSS online form
2. Routine inspections i.e. I-BEAM, JOHSC/NOSC for lab and office
3. Action plans from I-BEAM and JOHSC/NOSC inspections

5.0 Responsible Parties

The PGCRL's Facilities Manager shall oversee the implementation of this plan within PGCRL in coordination with other appropriate organization personnel, including but not limited to roles defined in table below.

Responsibilities by role are as follows:

Role	Responsibilities
Facilities Manager	Oversee implementation of the plan.
	Adopt and enforce the plan.
	Conduct I-BEAM HVAC and building exterior audits and address IAQ-related issues.
Research Operations Senior Manager	Investigate and coordinate to resolution IAQ-related issues from @yourservice (Archibus), I-BEAM audits and JOHSC/NOSC inspections.
Occupational Health & Safety Services –	Review JOHSC/NOSC reports and issue them to departmental managers for the creation and resolution of action plans to address IAQ-related issues.

©The Hospital for Sick Children ("SickKids"). All Rights Reserved. This document was developed solely for use at SickKids. SickKids accepts no responsibility for use of this material by any person or organization not associated with SickKids. A printed copy of this document may not reflect the current, electronic version on the SickKids Intranet. Use of this document in any setting must be subject to the professional judgment of the user. No part of the document should be used for publication without prior written consent of SickKids.

Role	Responsibilities
Hygiene Team	
PGCRL JOHSC/NOSC	Conduct JOHSC (based on I-BEAM) inspections and submit results to OHSS.
Facilities Planning Director	Adapt and enforce the construction and alterations practices to protect building occupants and contractors from exposure to contaminants.

6.0 Strategies and Procedures

PGCRL shall maintain an IAQ program that enhances the IAQ by optimizing practices to prevent the development of IAQ issues and maintain the well-being of staff, patients, their families, visitors and contractors through the following strategies and procedures:

6.1 Identification, diagnosis and resolution of IAQ-related health problems

The identification of issues will take place through the following methods:

- Continuous monitoring and alert system of building components, equipment and of the environment, for example, levels of CO_2 on all air handling units, the ventilation system and alerts of any issues with filters.
- Annual I-BEAM audit which will include building exterior and HVAC.
- Annual PGCRL's JOHSC/NOSC inspections which will include I-BEAM's indoor assessment.
- Building occupant feedback using @yourservice (Archibus), Safety Reporting System and OHSS reporting systems.

The I-BEAM and JOHSC inspections will cover indoor spaces, building exterior and HVAC. Any problems that can be addressed at no cost will be addressed promptly. For all other problems, the Facilities Manager with OHSS and Research Operations will establish a plan to address issues.

JOHSC/NOSC inspections include the office and lab areas. The inspection covers occupational health and safety knowledge, training, presence of workplace inspections, work environment, IAQ and ventilation, noise, lighting, emergency measures and fire safety, WHIMS and chemical handling, ergonomics, eyewash stations and safety showers, equipment, electrical, storage and housekeeping, building maintenance, personal protective equipment, waste disposal and sharps safety. JOHSC/NOSC inspection report will be submitted to OHSS. OHSS will review the report and send it to the manager of the department to action. The manager has 21 days to respond to the inspection report with an action plan to address the issue(s). This metric is reported in the Corporate Scorecard.

Issues will also be identified by staff through SickKids' electronic collection system @yourservice (Archibus). All IAQ related issues will be investigated by Research and Facilities Operations, and appropriate personnel engaged to address the issues.

Depending on the IAQ-related problem, measurement of thermal comfort, light, carbon dioxide and monoxide, relative humidity and level of contaminant may be taken to assess the concern when necessary. Measurements are compared to the legislation and standards outlined in SickKids' Resolution of Indoor Air Quality Issues and Smell/Odour Incidents procedure, which references:

- Regulation 883 Control of Exposure to Biological or Chemical Agents
- ASHRAE Standard 55 "Thermal Environmental Conditions for Human Occupancy"
- ASHRAE 62.1 "The Standards for Ventilation and Indoor Air Quality"
- Regulation 67/93 for Health Care and Residential Facilities

©The Hospital for Sick Children ("SickKids"). All Rights Reserved. This document was developed solely for use at SickKids. SickKids accepts no responsibility for use of this material by any person or organization not associated with SickKids. A printed copy of this document may not reflect the current, electronic version on the SickKids Intranet. Use of this document in any setting must be subject to the professional judgment of the user. No part of the document should be used for publication without prior written consent of SickKids.

- Canadian Standard Association (CSA) Z317.13-07 Special Requirements for Heating, Ventilation and Air-Conditioning (HVAC) Systems in Health Care Settings

6.2 Practices to reduce IAQ risks

In addition to the IAQ related issue identification mechanisms described in the previous section, PGCRL shall have a maintenance program consisting of scheduled and unscheduled equipment maintenance, as well as, a set of strategies and practices to maintain a high level of IAQ.

The maintenance program aligns with U.S. EPA I-BEAM and has the following mechanisms and records in place:

- Master equipment list
- Equipment history record as well as operating manuals, manufacturer's data and system prints in Archibus and OHSS databases
- Preventive maintenance schedule, and scheduled and unscheduled work orders in Archibus database

Strategies for managing major sources of pollution at PGCRL are summarized in table below.

Pollutant	**Strategies and Practices**
Mold and Moisture	Maintaining an acceptable relative humidity as determined by ASHRAE Standard 55 and 62.1, between 30 to 65 percent for both the summer and winter months. The Honeywell Enterprise Building Integrator's building automation system has programs in place to monitor moisture. Humidity levels in both the supply air and exhaust air are monitored and then system adjustments are in place to minimize under or over humidification. Thoroughly clean showers, inspect and address mold and mildew issues as specified in the Cleaning Showers and Bathtubs procedure.
Shipping and Receiving	Seven (7) snorkel pipe systems for trucks exhaust, no idle signage in the Shipping and Receiving area, a pressurized receiving area to ensure contaminants from loading area do not enter the building.
Pest Control – Integrated Pest Management	Strategies and practices defined in the Integrated Pest Management plan including pest prevention and the Organics Pest Management Plan.
Remodeling and renovation	Strategies and practices defined in section 6.3, including isolate construction areas and activities from occupants, create negative pressure in the construction area to isolate contaminants, seal grills and supply and exhaust in the construction area, wet washing construction areas daily.
Outdoor pollution	• Office and common areas are positively pressured to prevent outdoor pollution into the building • Research areas are negatively pressured to keep any containments inside the labs • All non-office doors are on automatic controls • Threshold sweeps are on all exterior doors
Biological agents generated during research procedures	• Biosafety cabinets, filtered animal cages, fume hoods- tested and certified annually • Safe work practices
Chemical agents used In research	• Fume hoods, canopy exhaust over washers, down and back draft tables in LAS • Safe work practices

©The Hospital for Sick Children ("SickKids"). All Rights Reserved. This document was developed solely for use at SickKids. SickKids accepts no responsibility for use of this material by any person or organization not associated with SickKids. A printed copy of this document may not reflect the current, electronic version on the SickKids Intranet. Use of this document in any setting must be subject to the professional judgment of the user. No part of the document should be used for publication without prior written consent of SickKids.

6.3 Protecting occupants from exposure to construction and renovation contaminants

Protect and sustain the comfort and well-being of staff, patients, families, visitors and contractors from exposures to construction and renovation contaminants by meeting, where possible, LEED IEQc1.5, IAQ Management for Facility Alterations and Additions requirements.

The construction process is traditionally an indoor air polluting activity and often results in the contamination of buildings during construction as well as continued contamination after the building is occupied. The HVAC systems are especially prone to contamination from construction particulate matter that contains dust, volatile organic compounds (VOCs), microorganisms and other contaminants. These contaminants can remain in the HVAC systems for years after occupancy. The documented strategies and activities outlined in this section create a plan to minimize the construction contamination prior to the building being occupied.

During Construction

- Meet the Canadian Standard Association (CSA) Z317.13-07 Special Requirements for HVAC Systems in Health Care Settings under Construction.
- Meet or exceed the Control Measures of the SMACNA IAQ Guidelines for Occupied Buildings under Construction, 2nd Edition 2007, ANSI/SMACNA 008-2008 (Chapter 3). The SMACNA guidelines address renovation projects.
- Section 6.3 provides methods that meet the SMACNA IAQ Guidelines for Occupied Buildings under Construction, 2007 including providing photos to highlight the implemented construction IAQ practices. Identify the SMACNA approach featured by each photograph, in order to show consistent adherence to the credit requirements.
- Follow the Master Contractor Safety Framework.
- Protect stored onsite or installed absorptive materials from moisture damage.
- If permanently installed air handlers must be used during construction, filtration media with a Minimum Efficiency Reporting Value (MERV) of 8 for pre-filters and MERV 14 for final filters must be used at each return air grill, as determined by ASHRAE 52.2-1999. If needed, replace all filtration media immediately prior to occupancy.

HVAC Protection

- The most significant potential IAQ sources from construction are dust, moisture, and VOCs. The approach for preventing dust-related problems is to identify all sources of dust and protect the HVAC systems. During construction, the grills and supply and exhaust air systems in the construction area(s) should be sealed off with plastic to prevent the accumulation of dust and debris in the duct system. In addition, HEPA filters will be used to create a negative pressure to prevent contaminants from leaving the construction area. This activity is the responsibility of the General Contractor.
- The mechanical rooms should not be used to store construction or waste materials. Rooms should be kept clean and neat at all times. This activity is the responsibility of all Subcontractors.
- Filtration is critical during construction and during startup of the HVAC system. Filter media needs to meet the ASHRAE requirement for MERV Level 8. Where possible, utilize 80% dust spot efficiency filtration.
- To document that the above guidelines are followed during the construction phase of the project, pictures will be taken by the Mechanical Contractor and submitted to the General Contractor. The General Contractor will also inspect periodically and take pictures throughout the duration of the project.

©The Hospital for Sick Children ("SickKids"). All Rights Reserved. This document was developed solely for use at SickKids. SickKids accepts no responsibility for use of this material by any person or organization not associated with SickKids. A printed copy of this document may not reflect the current, electronic version on the SickKids Intranet. Use of this document in any setting must be subject to the professional judgment of the user. No part of the document should be used for publication without prior written consent of SickKids.

Source Control

- Use of low VOC products, as indicated by the specification, should be utilized to reduce potential problems. This activity will be verified and checked by the General Contractor. See PGCRL's Sustainable Purchasing Policy and SickKids Chemical Management Policy for additional information on materials to be used during construction. Materials such as caulks, sealants, and cleaning products are the responsibility of SickKids Facilities Planning and General Contractors to meet the specification. Use of materials that fail to meet low VOC levels is prohibited in the interior of the building.
- Restrict traffic volume or prohibit idling of motor vehicles where emissions could be drawn into the building. This activity is the responsibility of the General Contractor and Facilities Management. The Shipping and Receiving area has seven (7) snorkels that vehicles can connect exhaust system to reduce pollution.
- Only electric alternatives for gasoline and diesel equipment should be used. The General Contractor will be responsible for managing the use of equipment.
- Cycle equipment off when not being used or needed. This activity will be overseen by the General Contractor. Subcontractors will be responsible for their own equipment usage.
- Containers of wet products should be kept closed as much as possible. Waste materials, which can release odor or dust, should be covered or sealed. This activity is the responsibility of General Contractor.

Pathway Interruption

- Utilize dust curtains or temporary enclosures to prevent dust from migrating to other areas when applicable. The General Contractor is responsible for coordinating this activity with Project Subcontractors.
- Relocate pollutant sources (paints, sealers, adhesives, caulking, cleaners, etc.) as far away as possible from supply ducts, areas occupied by workers, and absorbing materials when feasible. Absorbing materials include drywall, insulation, carpet, ceiling tile, etc. Supply and exhaust systems may have to be shut down or isolated during such activity. The General Contractor is responsible for coordinating this activity with Project Subcontractors.
- During construction, isolate areas of work to prevent contamination of clean or occupied areas. Pressure differentials can be utilized to prevent contaminated air from entering clean areas. The General Contractor is responsible for coordinating this activity with Project Subcontractors.
- Depending on climate, ventilate using 100% outside air to exhaust contaminated air directly to the outside during installation of VOC emitting materials. The General Contractor is responsible for coordinating this activity.

Housekeeping

- Institute cleaning activities concentrating on HVAC equipment and building spaces to remove contaminants from the building before occupancy. The General Contractor is responsible for coordinating this activity with the Mechanical Subcontractor.
- All duct work is sealed off during construction. It should be checked once unsealed and if needed cleaned before performing the testing, adjusting and balancing of the systems. The Mechanical Contractor is responsible for coordinating this activity.
- Suppress dust and any other contaminants with HEPA filtration system. In addition cleaning of the area under construction with a wet mop must be performed at the end of every day. The General Contractor is responsible for coordinating this activity.
- Water and any liquid spills must be taken care of immediately. Protect porous materials such as insulation and ceiling tile from exposure to moisture. The General Contractor is responsible for coordinating this activity.

©The Hospital for Sick Children ("SickKids"). All Rights Reserved. This document was developed solely for use at SickKids. SickKids accepts no responsibility for use of this material by any person or organization not associated with SickKids. A printed copy of this document may not reflect the current, electronic version on the SickKids Intranet. Use of this document in any setting must be subject to the professional judgment of the user. No part of the document should be used for publication without prior written consent of SickKids.

- Provide photographs during construction of the above activities to document compliance. The General Contractor is responsible for coordinating this activity.

Scheduling
There is a 2-week period between when occupants are allowed in the renovated/constructed space and when the plastic seals are removed from grills, and exhaust and supply system at the end of construction. The Facilities Planning, Facilities Manager and General Contractor are responsible for coordinating this activity.

NO CONSTRUCTION ACTIVITIES, INCLUDING PUNCH LIST ITEMS, ARE PERMITTED DURING FLUSH-OUT PERIOD.

Building Flush-Out
After construction ends, prior to occupancy and with all interior finishes installed, perform a flush-out of the affected building spaces by supplying a total outdoor air volume of 4,300 cubic meters per cubic meter (14,000 cubic feet per square foot) of floor area while maintaining an internal temperature of at least 16°C (60°F) and relative humidity no higher than 60% where cooling mechanisms are operated. The affected space may be occupied only after the delivery of at least 1,100 cubic meters per square meters (3,500 cubic feet of outdoor air per square foot) of floor area and the space has been ventilated at a minimum rate of at least 1.5 L/s/m2 or the design minimum outside air rate, whichever is greater. The minimum outside air rate should be determined using ANSI/ASHRAE 62.1–2007 (with errata but without addenda), the same criteria for EQ prerequisite 1, or the applicable local code if it is more stringent, for at least 3 hours prior to occupancy until the total of 4,300 cubic meters per cubic meter (14,000 cubic feet per square foot) of outdoor air has been delivered to the space. The flush-out may continue during occupancy.

Provide a description of the project's pre-occupancy flush-out process. Include data regarding temperature, airflow, and duration of flush-out. Additionally, provide information regarding special considerations.

Post Flush-Out
Upon completion of construction, return HVAC and lighting systems to the designed or modified sequence of operations.

7.0 Related Documents

- Resolution of Indoor Quality Issues and Smell/Odour Incidents
- Master Contractor Safety Framework
- Contractor Safety Policy
- Environmental Policy
- I-BEAM baseline audit
- Fume Hood Maintenance Program
- Effective Use of Biosafety Cabinets
- PGCRL Annual WPI Lab Inspection Report (updated to meet I-BEAM indoor spaces requirements)
- PGCRL Office Inspection Checklist (updated to meet I-BEAM indoor spaces requirements)
- CGC-OSP-JSA-446-120E Cleaning - Showers and Bathtubs procedure

8.0 References

©The Hospital for Sick Children ("SickKids"). All Rights Reserved. This document was developed solely for use at SickKids. SickKids accepts no responsibility for use of this material by any person or organization not associated with SickKids. A printed copy of this document may not reflect the current, electronic version on the SickKids Intranet. Use of this document in any setting must be subject to the professional judgment of the user. No part of the document should be used for publication without prior written consent of SickKids.

LEED Canada for Existing Buildings Operations and Maintenance V2009 Reference Guide
(EBOM_2009_CaGBC_reference _guide)

Attachments:

Baseline I-BEAM Audit Forms - Template.xls

CGC-OSP-JSA-446-120E Cleaning - Showers and Bathtubs.doc

EBOM_2009_CaGBC_reference_guide.pdf

PGCRL Annual WPI Lab Inspection Report - Updated Dec. 2017.doc

PGCRL Office Inspection Checklist - Jan 2018_final.doc

©The Hospital for Sick Children ("SickKids"). All Rights Reserved. This document was developed solely for use at SickKids. SickKids accepts no responsibility for use of this material by any person or organization not associated with SickKids. A printed copy of this document may not reflect the current, electronic version on the SickKids Intranet. Use of this document in any setting must be subject to the professional judgment of the user. No part of the document should be used for publication without prior written consent of SickKids.

Appendix M1

Contractor Orientation Presentation

SickKids®

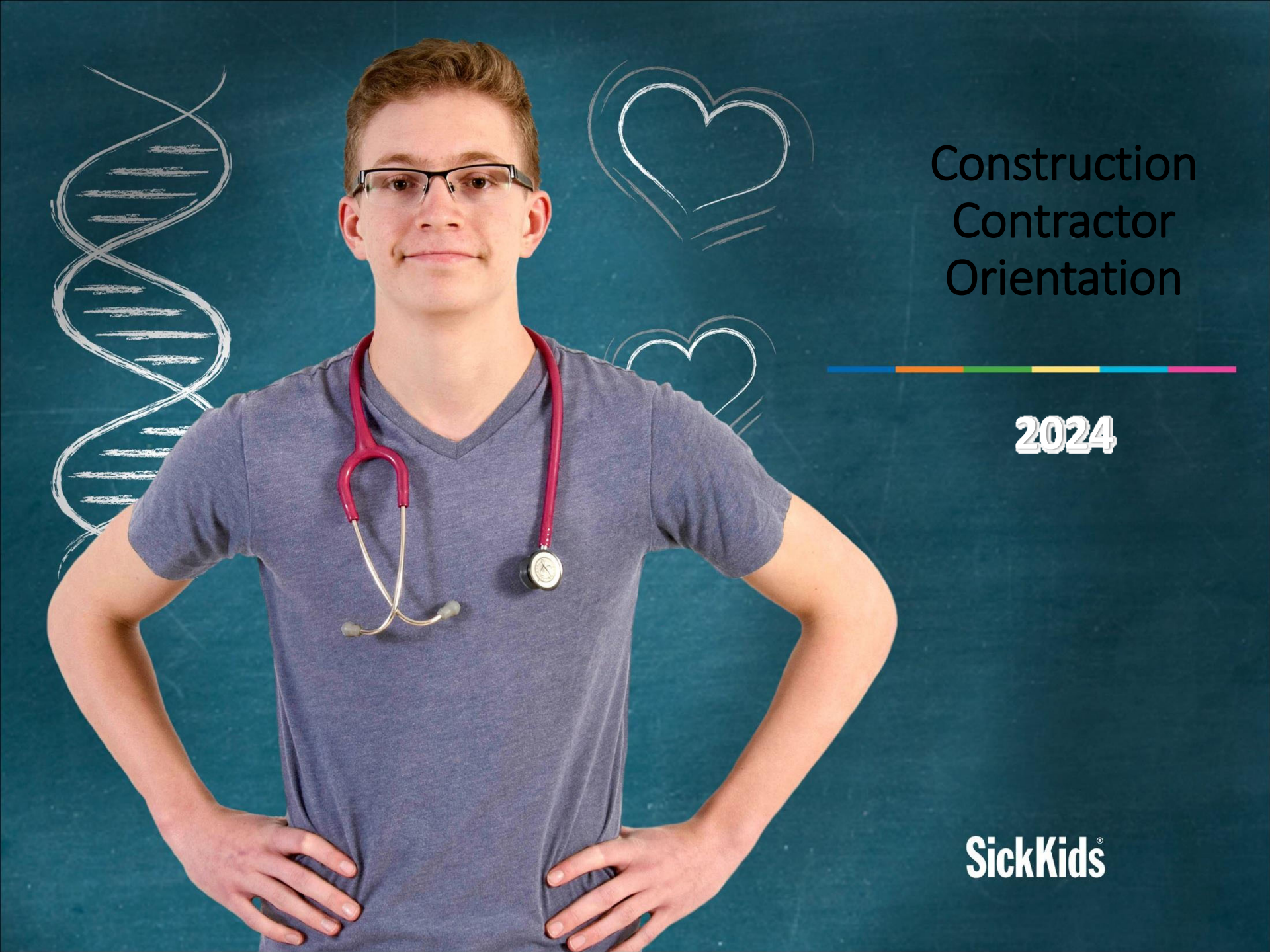

Construction Contractor Orientation

2024

SickKids®

Construction Contractor Orientation

Orientation:

- About SickKids
- Occupational Health and Safety
- Emergency procedures
- Security and Protection Services
- Fire Safety
- Infection Prevention and Control
- **Valid for 2 years**

SickKids

About SickKids

16,832 admissions

294 beds occupied on average

80,479 ED visits

12,529 OR cases

11,237 staff

316,021 ambulatory visits

SickKids

About SickKids

SickKids

About SickKids

Tell us about….what you do?

Can you give an example of something you do on the job that might affect SickKids patients, visitors or staff?

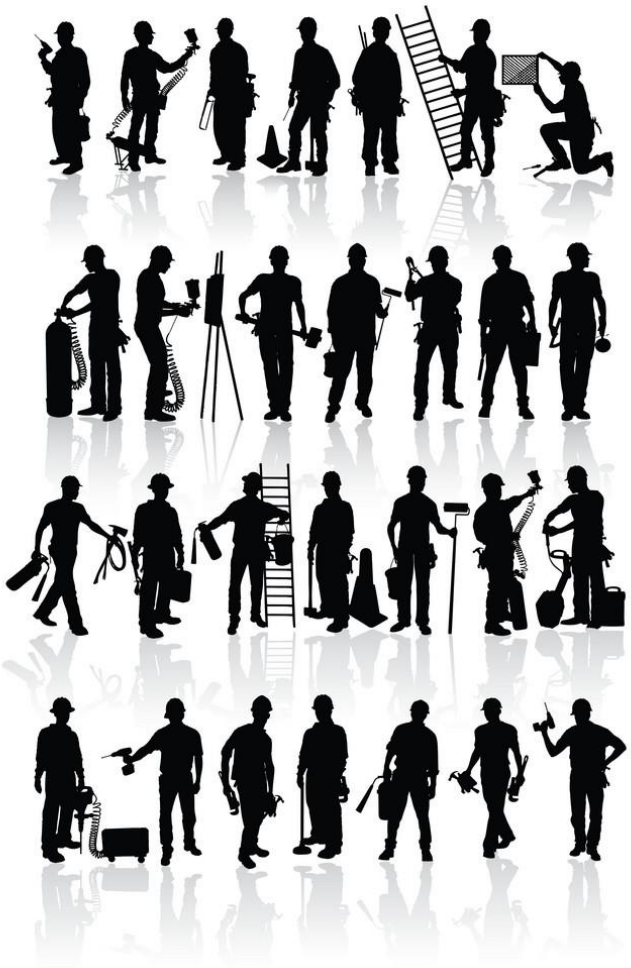

SickKids Code of Conduct 2024

Aligned with our values, The SickKids Code of Conduct provides the Hospital Community with the framework of SickKids expectations of acceptable business practices and the communities' responsibility as it pertains to ethical conduct, integrity, and standards of professionalism. The full Code of Conduct policy can be found on the intranet and should be reviewed in its entirety. Key components that make up the Code of Conduct, are detailed below.

Respect

- At its core, respect can be described as a positive feeling or action shown toward someone or something that one considers important.
- At SickKids, we believe that EVERYONE is important.
- We treat patients, families and each other with respect at all times by being courteous and considerate in our language and actions.
- Regardless of what role we play in patient care or in the organization, professionalism and respect is critical at all times. Working in Healthcare is often quite stressful, and stress can sometimes impact how we speak to one another, so being mindful of this can help us navigate these difficult situations.
- Respectful behaviour is also demonstrated by being compassionate and fair, not showing advantage to anyone, and creating an inclusive environment.
- All of this creates a psychologically safe workplace, where everyone is safe to speak up and feels accepted and respected.

Construction Contractor Orientation

Respectful Behaviour Examples:

- Thanking someone for their hard work
- Stopping and thinking before saying something that could hurt others
- Valuing differences
- Sharing resources and knowledge when a colleague asks for help

Disrespectful Behaviour Examples:

- Not being inclusive (discounting someone's ideas in a meeting)
- Getting into the elevator ahead of a patient and their family
- Shouting at someone
- Using inappropriate language
- Freezing others out
- Using off colour humor to make light of a situation
- Gossiping about others

- There is a point where disrespectful behaviour crosses the line and this constitutes violence and harassment. Legislation defines workplace violence as physical force by a person against a staff member that may or may not cause injury, and includes behaviour that staff interpret as a threat of physical force.
- Harassment means engaging in a course of upsetting comments or conduct against staff that is known or ought to reasonably be known to be unwelcome; or workplace sexual harassment.
- In the hospital, violence and harassment can occur in various forms and can come from another staff member, a member of the public, and patients and families.
- SickKids has a zero tolerance policy for acts of harassment and/or violent behaviour to protect the health and safety of staff; ensuring that appropriate measures are taken to identify, prevent, reduce, mitigate, manage, correct and provide support in all situations involving harassment and violent behaviour.
- Proven cases of violation of this policy will be subject to remedial or disciplinary measures. The corrective measures will be determined on a case-by-case basis and will be appropriate to the terms of the violator's relationship to the Hospital.
- For additional information, check out the "Prevention of Workplace Violence and Harassment" policy on the intranet.

Honesty and Integrity

- Honesty and integrity is about doing what is right and doing so all the time – even when no one is there to see what you're doing or when you see others making inappropriate choices.
- This means being honest and truthful in our communications with others, such as: giving each other honest feedback; sharing information to help others be successful; and letting others know when we've made a mistake, so everyone can learn.
- Honesty and integrity is also about complying with legislation, such as ensuring patients come first and quality care; and the Human Rights Code which establishes equal rights and opportunities and freedom from discrimination for us as employees.
- There are over 200 laws that apply to aspects of the Hospital's operations and we are required to familiarize ourselves with the ones that are applicable to the work that we do.
- As a publicly funded organization we are accountable to the Tax Payers of Ontario in how we use their money. We also receive grant funding for our research work and receive significant donations through the SickKids Foundation to support the many initiatives that allow us to provide the care we do. We are all responsible for ensuring we steward and use this money wisely – whether securing materials for the hospital, outsourcing external vendors, or managing our own spends through the benefits provided. We are all accountable to handle this money in the best interest of the hospital.
- We are all accountable for our actions and decisions, and the Code of Conduct helps ensure we make the best ones. We must be alert in the care and use of hospital property and resources, and failing to do so can put us in a position of fraud and mistrust.
- If you are ever unclear about anything, please consult the policy or your manager.

Safety

- We promote a safe and healthy environment for patients, family, staff, and all those who are associated with the hospital.
- We protect our patients from harm and take all reasonable precautions to ensure our own safety and that of our colleagues – taking such actions as reminding a colleague to put on gloves if you notice that they seem to have forgotten.
- For everyone's safety we must always be quick to identify and report safety events and risks.

Confidentiality

- Like safety, privacy is of the utmost importance to us at SickKids.
- We respect and preserve the rights of patients, families, and staff through the protection and security of their personal information.
- We do not disclose any personal or private information beyond disclosure required to support the circle of care and appropriate business operations without proper authorization or in accordance with the law.

Any member of the Hospital community who is aware of, or suspects a breach of the code, is responsible for reporting the breach or concern as soon as possible.

What should you do when you witness someone not adhering to the Code of Conduct?

Speak with the Person

- This is a great approach as it ensure they are aware of their actions (they may not realize what they did) and may prevent them from doing the same thing in the future. If possible, suggest having a conversation with them away from their usual work area to keep it private and away from team members and patients.

File a Safety Report

- The Safety Reporting System is an online tool that captures safety events, safety concerns, hazards and breaches.
- Safety reporting facilitates the identification, trending and communication of safety issues. It is not intended to find fault with individuals or to lay blame.
- Reports may be made to the reporting individual's immediate Supervisor/Manager/Director/Head/Chief, the Human Resources Partner or Employee Relations within SickKids.

Report to your Leader

- In addition to filing a safety report, you may wish to report the suspected breach to your leader.

Advise Human Resources and/or Employee Relations

- Should the concern raised in the safety report involve your leader then you may report it to your next level of leadership (your leader's leader), Human Resources, and/or Employee Relations.

Report using the third-party Whistleblower system

- If you are aware that wrongdoing has occurred or have concerns of possible wrongdoing and you don't feel comfortable discussing with your manager or the other options outlined above, you can make a report using the third-party Whistleblowing System through one of the following methods: ○ Website: https://www.integritycounts.ca/org/sickkids

○ Phone: 1-866-921-6714 (toll free)

○ Email: sickkids@integritycounts.ca (not anonymous)

Have questions?

- If you have any questions about the Code of Conduct, please speak with your manager or contact Human resources.

Resources

- Code of Conduct Policy
- Prevention of Workplace Violence and Harassment Policy

Privacy & Information Security 2024

Under the law, hospitals like SickKids have an obligation to protect the personal health information of patients. As a contractor of SickKids, you also have a duty to protect this and other confidential information you may come across or overhear.

All contractors acting on behalf of and/or providing a service to SickKids may be exposed, witness or overhear sensitive and/or confidential information (e.g., patient, employee and proprietary business information). You must keep this information confidential. This means not sharing sensitive information with:

- colleagues if there is no need to know the information, and/or
- friends or family.

Privacy & Information Security 2024

If you find sensitive and/or confidential information (e.g., patient, employee and proprietary business information) unattended or unsecured (e.g., a patient list in a bathroom or on the floor), place it in a grey confidential waste bin or give it to your supervisor AND make an attempt to inform the SickKids Privacy Office (Privacy.Office@Sickkids.ca).

Never access or attempt to access SickKids systems (e.g., computers, electronic devices, etc.) as you may compromise the device's set-up, utility, security and/or expose confidential information.

When connected to the internet using SickKids Wi-Fi

- Only visit legitimate and trusted websites, especially when downloading documents or files. Websites of legitimate organizations are generally free of spelling mistakes and grammatical errors.

- Be weary of links, clickable buttons, any promise of reward or consequence, typos/incorrect grammar, request for confidential information, and generic salutations and signatures.

- Safe websites will show a padlock icon usually at the start of the website address (or sometimes after URL bar) and begin with “https://” (the “s” stands for secure). The domain within the URL should stay the same after each click and on each page.

- Avoid using social networking sites as they are vulnerable to spying, malware, and misrepresentation (e.g., such as fake profiles).

Physical Security

Your access privileges are determined by your role. If you notice you are able to access a building or area within a building you know you should not have access to, inform your supervisor.

Health & Safety at SickKids

Occupational Health and Safety Services

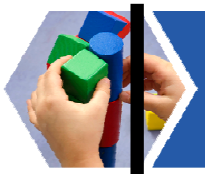

INFRASTRUCTURE

SickKids®

Occupational Health & Safety

Our Role:

- Review and approve all construction activities
- Ensure safety of staff, patients and visitors during construction
- Address construction related H&S complaints outside of the construction site

Site safety:

- Responsibility of the GC and trades

Who Do We Care About:

- Everyone – patients, families, visitors, staff & contractors
- Everyone has a role in their health & safety and the safety of everyone else

caringsafely

Contractor Expectations:

- Comply with all H&S and environment laws
- Work safely
- Follow project rules and SickKids procedures
- Failure to comply may result in discipline, including dismissal from site

Questions or Concerns?

- Consult with GC or SickKids PM

Separation of Work Activities:

- Goal is to protect everyone – contractors, staff, patients and visitors

•Can you think of any examples of high-risk patients?

- Cancer patients
- Intensive care patients
- Surgery patients
- Transplant patients
- Babies/young children

- Need to keep construction projects separate from each other

Separation – Safety Considerations:

Corridors

- Use assigned routes and a spotter
- Patients, visitors and staff have right of way

Elevators

- Time and use are limited
- Must book with SickKids PM

Loading docks

- Access times are limited
- No staging space
- No parking

Not what we want to see!

Some Construction-Created Hazards:

Physical

- Noise, vibration, radiation

Safety

- Slips, trips, working at heights, moving equipment, falling objects, electrical, fire

Chemical

- Solvents, welding tanks, flammable materials, dust

Workplace Violence/Harassment

Can affect staff, patients & visitors directly or indirectly

Some SickKids Workplace Hazards:

Physical

- Noise, radiation, lasers, temperature

Safety

- Slips/trips/falls, moving equipment, falling objects, electrical, fire

Chemical

- Laboratories, compressed gases, cleaning products

Biohazardous waste/sharps

Workplace violence/harassment

Hazards vary by location

Biohazardous Waste/Medical Sharps:

- Possible exposure to pathogens by injuries with contaminated sharps or bodily fluids
- Exposure risk to contractors is low
- In the event of an exposure:

  Go immediately to nearest adult Emergency Department (not SickKids)

  Tell exactly what happened

Workplace Violence & Harassment:

- SickKids has a Zero Tolerance policy
- No use of offensive language
- Treat all members of the SickKids community with dignity and respect
- Applies to all areas of the SickKids campus

See someone posing a threat to themselves or others?

- Call Protection Services @ 416-813-7122

On Site Chemical Hazards & WHMIS:

- Inform SickKids about hazardous materials used on site; provide SDS
- Includes paint, adhesives, solvents, gases
- Safety data sheets required on site
- Containers labelled and stored properly
- Storage of large amounts need prior approval
- Appropriate spill kit must be on site

Designated Substances at SickKids:

- Use of and exposure to these materials regulated by OHSA
  - Acrylonitrile, arsenic, asbestos, benzene, coke oven emissions, ethylene oxide, isocyanates, lead, mercury, silica, vinyl chloride
- SickKids has hazardous materials inventory
- Provided to GC prior to start of project
- Use of designated substance on project to be reported and approved by SickKids

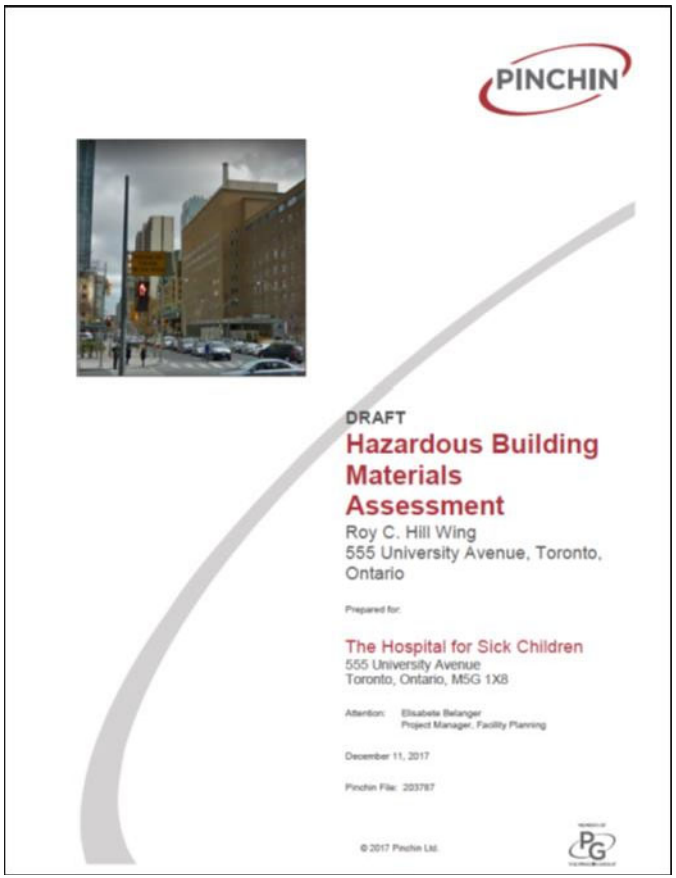

PINCHIN

DRAFT

Hazardous Building Materials Assessment

Roy C. Hill Wing
555 University Avenue, Toronto, Ontario

Prepared for:

The Hospital for Sick Children
555 University Avenue
Toronto, Ontario, M5G 1X8

Attention: Elisabete Belanger
Project Manager, Facility Planning

December 11, 2017

Pinchin File: 203787

© 2017 Pinchin Ltd.

Asbestos:

- Present in areas of older buildings (Annex, Atrium) – friable and non-friable
- SickKids has inventory, site specific inventory provided to GC
- If you identify or suspect any unidentified material as ACM, report it immediately to your supervisor and SickKids PM
- All asbestos work must be conducted as per OHSA asbestos regulations

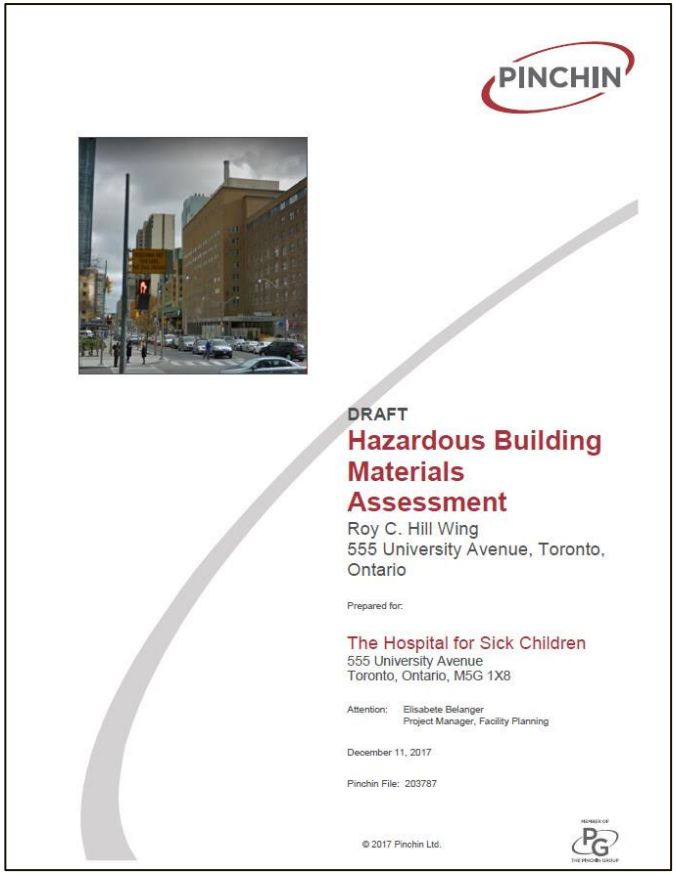

PINCHIN

DRAFT

Hazardous Building Materials Assessment

Roy C. Hill Wing
555 University Avenue, Toronto, Ontario

Prepared for:

The Hospital for Sick Children
555 University Avenue
Toronto, Ontario, M5G 1X8

Attention: Elisabete Belanger
Project Manager, Facility Planning

December 11, 2017

Pinchin File: 203787

© 2017 Pinchin Ltd.

Confined or Restricted Space Entry:

- Must be done by according to legislation, SickKids and employer policies
- Plan and entry permit required

Lockout & Tagout:

- Follow all SickKids and employer policies and procedures
- Contractor must provide locks and tags
- Do not remove anyone else's lock or tags

Personal Protective Equipment:

- All PPE required for safety on site must be provided by contractors or their employer
- Trades are required to use and wear PPE required by supervisor/GC
- Contractor's employer required to provide all training regarding PPE use
- SickKids does not provide any PPE or training

COVID - 19:

Effective June 29, 2023, masking will be optional in most public areas of the hospital but remains mandatory when there is prolonged patient contact to protect the most vulnerable and reduce the risk of outbreaks. Here's what you need to know:

- Masking is optional in most public areas of the hospital (e.g., Atrium), including common spaces in clinical areas (e.g., hallways, meeting rooms, nursing stations) and waiting areas where patients are not present (e.g., the critical care and surgical waiting rooms).

- Level 1 masks will still be available at entrances to be worn when needed; however, Level 3 masks may only be obtained in clinical areas.

COVID - 19

- Do not come in if you are not feeling
- Follow Public Health guidelines if you have travelled
- Follow Public Health guidelines if you have been exposed to someone who has tested positive for COVID-19

First Aid and Emergency Assistance:

- First aid kits are required on-site
- For serious injuries:
  - Go to nearest adult hospital Emergency Department (not SickKids)
  - Call 911 then Protection Services @ 416-813-7122

Accident Reporting and Investigation:

- Report all accidents to supervisor
- Supervisor to provide accident report to SickKids PM

Tools and Equipment:

- Should not interfere with patient care or hospital operations
- Do not use SickKids tools or equipment unless authorized
- Clean surfaces of equipment
  - Should not be coming in dirty or dusty
- Working in a public space?
  - Use cones, barriers, and/or spotters to protect the public and staff

General Housekeeping:

- Keep work areas tidy, Do not leave things lying around
- Do not block aisles, doors, stairways or any safety equipment (ie. fire extinguishers and eyewash stations)
- Remove all debris and waste regularly
- Sweep/mop work areas to reduce dust
- Supply your own cleaning chemicals and equipment

Environmental Responsibility & Spills:

- No materials or chemicals down drains
- Dispose of hazardous materials as appropriate
- Immediately report any spills, floods or uncontrolled emissions to supervisor and SickKids PM
- Keep an appropriate spill kit onsite

SickKids Fragrance-Free Policy:

Products with fragrances can cause:

- Allergic reactions
- Headaches
- Nausea
- Shortness of breath

Can affect patients, visitors and staff

Avoid the use of fragranced products such as cologne, perfume, deodorants

Includes cleaning products or other materials with added fragrances

SickKids

High Noise Levels:

High noise can affect patient care

- Interrupts communication
- Disrupts sleep

Inform SickKids ahead of time about noisy work

Any high noise generating activity must be terminated upon request

Remember: If it is loud to you, it is loud to our patients and staff!

Indoor Air Quality:

- Contractor to take measures to contain airborne dust, vapors or odors
- Need to prevent these from migrating to occupied areas
- Equipment that exhausts hazardous materials or odors are not to be used unless controlled properly

Complaints from SickKids staff:

Always have an approved activity permit prior to starting work

If there is a complaint:

- Thank them for concerns and immediately contact your GC or SickKids PM

SickKids will work with you and department to resolve concerns

Protection Services / Emergency Codes

Protection Services Department

INFRASTRUCTURE

SickKids®

Protection Services

While at SickKids:

- Must wear SickKids contractor ID (> 5 days)
  - < 5 days supervised by someone with SickKids ID
- No smoking on property or within 9 m of any door
  - Includes loading dock
- Keep sites and tools locked/secured
- Report suspicious persons, thefts & incidents ASAP
- Area access to be arranged ahead of time
- After hours work only with approval from SickKids PM
- Park only in parking lots (not in loading docks)

Emergency Codes

In Case of Emergency, Call:

- Dial x5555 from house phone
- 416-813-5555
- 911 then Protection Services @ 416-813-7122

Hospital Emergencies:

- SickKids uses colour codes for emergencies
- Called at Hospital and Research Tower
- Hear a code call?

  Stop work and listen

  Follow directions

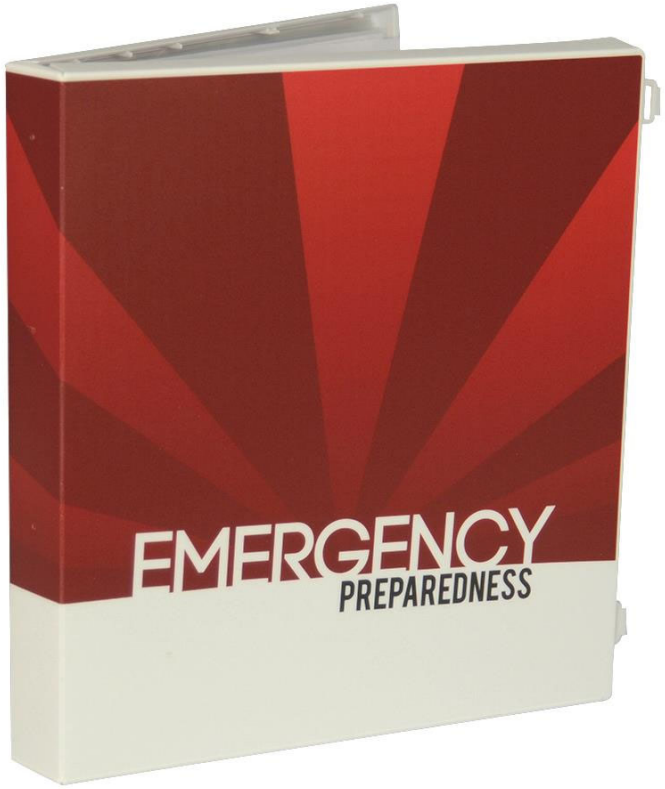

SickKids

Emergency Codes

SickKids Colour Codes:

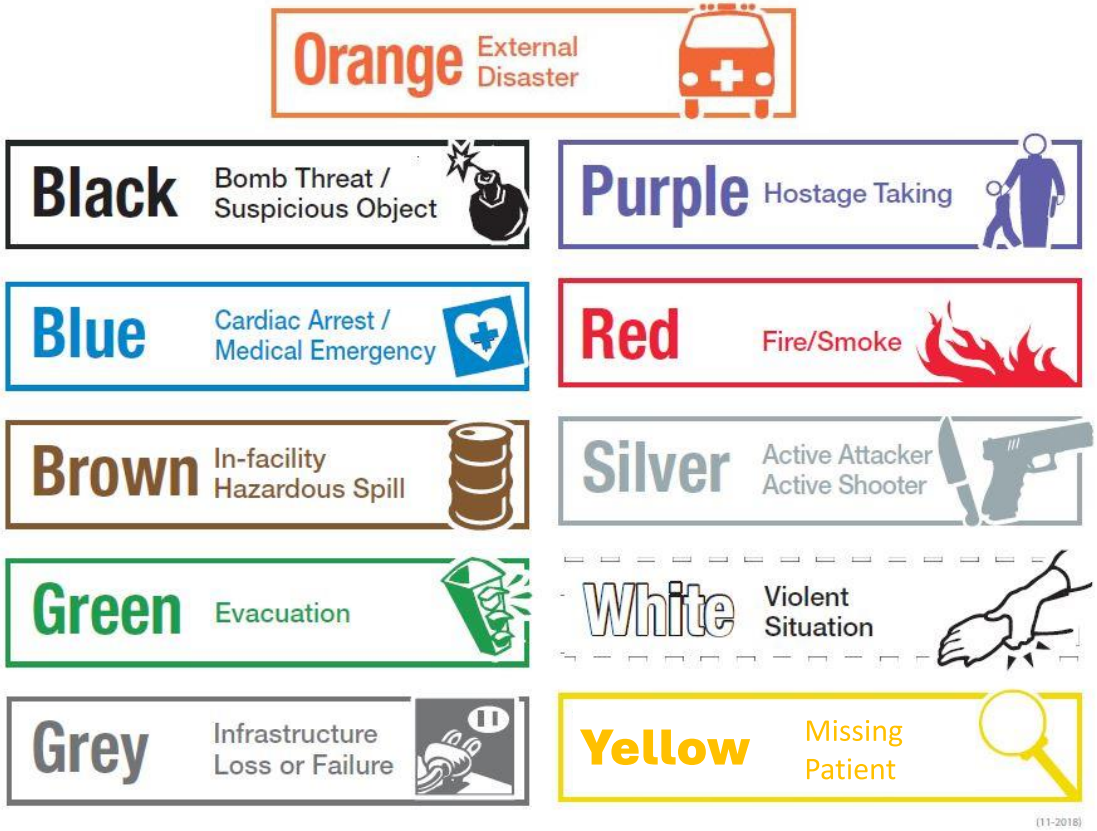

SickKids

Emergency Codes

Code Red – Fire:

- Follow R.E.A.C.T Accronym

Remove occupants

Ensure area secure

Activate alarm

Call – report the fire

Try to fight the fire

Code Orange – Internal/External Disaster:

- Disaster that may overwhelm hospital resources
- May result in disruption to contractor's work

Colour Code…
Red
Orange
Green
Yellow
Blue
Brown
Black
White
Purple
Silver
Grey

SickKids

Emergency Codes

Code Green – Evacuation:

- During a code green evacuation, personnel follow overhead announcements to safely evacuate the affected area.

Code Yellow – Missing Patient:

- Listen to description/search work area
- Call 416-813-7122 if you see them
- Listen for further instructions

Colour Code…
Red
Orange
Green
Yellow
Blue
Brown
Black
White
Purple
Silver
Grey

SickKids

Emergency Codes

Code Blue – Resuscitation:

Listen for location

- Stay out of way of code team

Happens on your site?

- Call 911 and then 416-813-7122
- Security will direct ambulance to site

Code Brown – Hazardous spill:

Listen for location

- Stay out of way of code team

Contractors responsible for spills on their site

Call 416-813-7122 to advise of spill

Colour Code…
Red
Orange
Green
Yellow
Blue
Brown
Black
White
Purple
Silver
Grey

SickKids

Emergency Codes

Code Black – Bomb Threat:

Stop and listen

Search site for suspicious packages

- Do not touch!
- Call 416-813-7122

Code White – Violent Person:

Listen for location

- Stay out of way of response team

Call 416-813-7122 if you need help

Colour Code…
Red
Orange
Green
Yellow
Blue
Brown
Black
White
Purple
Silver
Grey

SickKids

Emergency Codes

Code Purple – Hostage Situation:

- Hostage situations are often stationary/static events
- Intends to hold themselves or someone else against their will, issuing demands for resolution

Code Silver – Active Shooter/Attacker:

Listen for location

- Run – Leave area if possible
- Hide – Secure area; stay out of view
- Defend – Last resort

Code Grey – System/Infrastructure Failure:

- Listen to announcements
- May or may not impact work on site

Colour Code…
Red
Orange
Green
Yellow
Blue
Brown
Black
White
Purple
Silver
Grey

SickKids

Fire Safety

Randy Wiken & John Chartrand
Protection Services Department

INFRASTRUCTURE

SickKids®

What word do we use to respond to Code Red (fires)?

Remove occupants - if safe to do so

Ensure area secure– close doors to contain fire & smoke

Activate alarm – know location of 2 closest pull stations

Call – report the fire – x5555 or 416-813-5555 or 911

Try to fight the fire – if trained and it is safe to do so

Fire Safety

Fire Alarm System:

1st Stage Alarm – Alert/Warning

- Rings at 20 BPM – then Code Red announcement
- Overhead announcement of location
- Code Red team and Fire Department respond

2nd Stage Alarm – Evacuation

- Rings at 120 BPM – then **Code Green** announcement
- Evacuation of area/building

Accidental alarm activation by contractors may be back charged (~$1500)

Fire Safety & Emergency Codes

Response Procedures:

1st stage fire alarm (20 bpm tone):

- Stop work and listen for location/instructions
- If all clear is sounded, work can resume
- If you hear the evacuation tone or detect smoke/fire, proceed with evacuation

2nd stage evacuation alarm (120 bpm tone):

- Close doors behind you
- Do not use elevator; use stairwells instead
- Can't evacuate? Shelter in place and call (416) 813-5555 or 911

Smell smoke/see fire? Remember to REACT!

SickKids

Fire Prevention:

Contractors to have emergency plan that includes:

- Location of 2 exits from floor area
- Location of meeting point/assembly area
- Locations of pull stations and hose cabinets
- Locations of fire extinguishers
- Proof of attendance of fire safety & extinguisher training

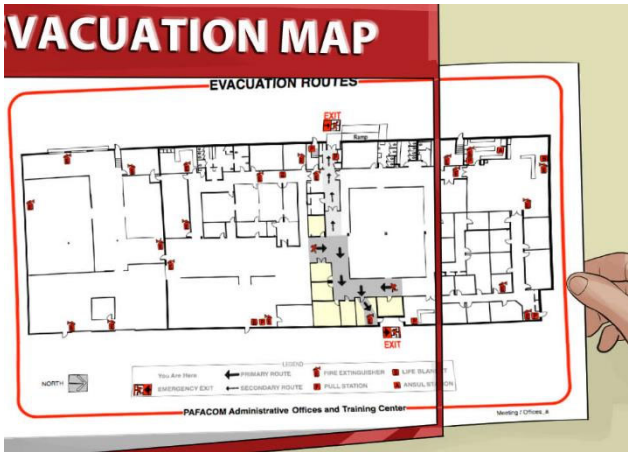

Fire Watch

- Site super needs to ensure fire watch during work
- Additional fire watch requirements for all **hot work** or **red tag work**

Fire Safety & Emergency Codes

Housekeeping:

- No accumulation of combustible material/garbage on site
- Do not block doors, aisles, hoses, extinguishers, pull stations
- Do not block/obstruct sprinkler heads or other devices
- Do not prop fire doors open
- Do not store items in electrical or service rooms

Fire Safety & Emergency Codes

Flammable Liquids :

- No propane cylinders on/inside any sites
- Flammable/combustible liquids must be stored in ULC-rated containers or cabinets
- Keep flammable liquid storage to minimum
  - Normal daily use
- Do not store flammables near exits

Compressed Gases:

- Gas cylinders to be properly secured
  - In use and when stored
- Valve caps in place when not in use

SickKids

Fire Safety & Emergency Codes

Fire Extinguishers:

- Contractor to supply at least 1 appropriate extinguisher with a 40 BC rating
- More may be needed depending on risk
- Do not use SickKids extinguishers
- Extinguisher inspected monthly and hung properly

Heat Producing Equipment

- Turn off any heat producing equipment when not in use and at end of day
- Follow all guidelines for welding and other hot work
- **Hot Work permits** are required for any work that creates heat, spark, or flame and for all cutting & welding work

Fire Safety & Emergency Codes

Fire Alarm & Sprinkler Systems:

- Impairment of fire alarm device/sprinkler not permitted without approval from SickKids Fire Marshal or Fire Coordinator
- Smoke/heat detectors not to be covered
- Removal of alarm devices/sprinkler systems not permitted unless approved by SickKids PM or Fire Marshal
- Unintended impairment of any fire safety system to be immediately reported to SickKids

SickKids

Fire Safety & Emergency Codes

Fire Bypass:

- Submitted 48 hours in advance (form @yourservice)
  Weekend/Monday request by 1 PM prev Thursday
- Bypass not completed until contractor has met on-site with Building Operator
- Contractor not to leave until fire system restored and devices are verified working by Building Operator
- No fire device left impaired/not functioning without approval from SickKids
- Alternative measures for fire protection must be put into place during bypass

Work on Fire Systems:

- Work done only by certified fire system installer

SickKids

Hot Work Permits

- Request submitted 48 hours prior
- Permit and fire bypass approvals needed
- Permit valid for 12 hours or 1 shift
- Return closed permits to SickKids security

Fire Watch:

- Fire watch done by contractor in bypassed areas
- 1 hour fire watch after completion of hot work
- Additional fire watch requirements may be specified by SickKids Fire Marshal

Fire Safety & Emergency Codes

Fire Protection Out of Service (Red Tag):

- Shutdown requests for fire protection equipment submitted at least 14 days in advance
- Obtain hard copy of Red Tag permit from Building Operator
- Before work fire watch to be established and fire safety measures in place
- Notify SickKids when work is complete

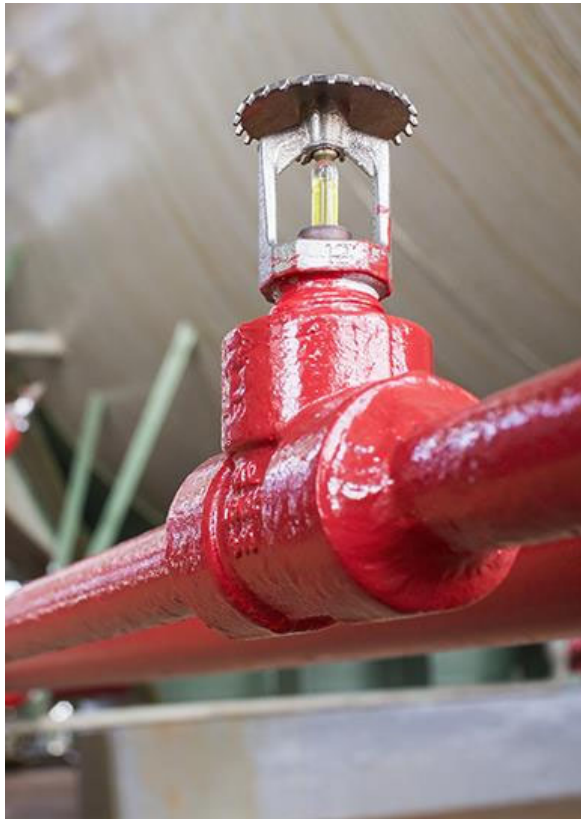

Questions or Concerns?

- Consult with GC or SickKids PM or Fire Marshal

Infection Control Requirements

Krista Cardamone

INFRASTRUCTURE

SickKids®

Why consider Infection Control?

- Most work has potential to disturb dust –sometime years' worth!
- Ceiling spaces, under sinks, behind cupboards and cabinets, cutting through walls
- Serious health risks for patients, staff, and visitors from construction, renovation, and maintenance activities
- Without containment, these activities can spread dust that is contaminated with bacteria and fungi

What is the risk?

- It's not just major projects that pose a risk to patients, minor activities can generate dust as well
- Dust particles can carry bacteria and fungi from the work site
- Any time dust will be created, it must be contained
- Not always visible –we aren't just concerned about seeing a messy space

What is the risk?

- Serious and life-threatening infections –blood, brain, lungs, skin
- Fungal disease kills
- Highest risk –immunosuppressed, really tiny babes
- Longer treatment and hospitalization –IV antibiotics with side effects, surgeries, skin grafts, loss of limbs

Who could be harmed?

- Our patients are immunocompromised –all types and stages of cancer
- Open wounds –heart surgery, severe burns, new organs like livers
- Respiratory diseases, cystic fibrosis, lung transplants
- Babies weighing less than a pound, skin not fully developed to protect them

Invasive Aspergillus Disease

- Construction-related infections caused by *Aspergillus* and other fungi have been well documented
- The death rate for aspergillosis (i.e., an *Aspergillus* infection) is 65% -100%
- Treatment involves lengthy IV meds, surgical interventions, incredible pain

How can we decrease risk?

- A lot of published guidelines exist
- SickKids policy
- Canadian Standards Association is the gold standard in Canada
- CSA Z317.13-17: Infection control during construction, renovation, and maintenance of health care facilities
- IPAC uses the CSA Standard when consulted about projects

Infection Control Risk Assessment

- Focus on the potential infection risks posed by construction, renovation activities
- Where is the work occurring? OR? NICU? Office?
- What patients are in that area? Supplies?
- How much dust is going to be disturbed or created?

Infection Control Risk Assessment

- IPAC team gathers this information
- CSA Standard is used as guideline
- Work with PMs to determine the safest way to proceed
- Measures are not meant to slow you down, make your job harder; it's all about protecting the kids

CSA Group

Preventative measures

- Vary based on job and area of project, specific to the work you are doing
- May differ from hospital to hospital based on type of patient and infrastructure
- Change over time as guidelines evolve –know more = do better
- Even if 5 years ago, you built the very wall you are working on today, the infection control requirements may have changed since then!

Preventative measures – Level I

- Identify if any high-risk patients should be moved away from the area during the work
- Identify measures required to minimize dispersion of dust
- Remove all patient care equipment and supplies from the construction zone
- If unable to be moved, protect patient care equipment and supplies from dust exposure
- Ensure the work area is terminally cleaned after the work has been completed

Preventative measures – Level II

- All level I measures, plus the following:
- Use 6 mil fire retardant poly barriers that are sealed to control dust
- Seal unused doors
- Plan a safe routing for the transportation of clean supplies and dirty debris
- Establish methods and provide the necessary equipment to minimize dust at the source, so it is not dispersed into the air
- Water mist work surfaces to control dust where cutting

Preventative measures – Level II … cont'd

- Block off/seal or isolate HVAC system supply and return air ducts
- Contain construction waste before transport in tightly covered containers that are cleaned on the outside before transport
- Wipe the wheels of mobile equipment, transport carts and bins
- Water lines in construction area and adjacent patient care areas are flushed for 10 min before reuse

Preventative measures – Level III-IV

- All Level I and Level II measures shall be implemented
- Infection Prevention & Control must be involved
- Negative air pressure required, electronic monitoring and data logging of differential pressures
- The monitor needs to be alarmed for immediate notification
- Dust barriers/hoarding constructed to enclose the area, 2 layers of 6 mil poly and drywall on steel studs

Preventative measures – Level III-IV .. cont'd

- Includes an anteroom as the designated access to and from the site
- Walk-off mats used at entrance/exit of site
- Contractors must be clean and free of debris when exiting site (i.e using a HEPA vacuum)
- Carefully remove barrier walls to minimize environmental contamination during removal

Preventative Measures

- Know what is required for your specific project
- Have the equipment and supplies needed to ensure your measures are in place
- Can’t meet requirement? Call PM and IPAC will be pulled in to discuss
- Remember why precautions are required -you, SickKids staff, and the kids!

- **If you are still with me… questions?**

Appendix M2

Contractor Orientation Sticker Policy

SickKids®

Scope: External Contractors
Document Type: Procedure, Policy
Approved on: Feb, 24th 2024
Next Review Date: Feb, 24th 2026

Construction Orientation Sticker Policy

Version: 1

1.0 Introduction

The objective of the Contractor Sticker Orientation Policy is to guarantee that contractors present on SickKids premises have undergone orientation within a two-year timeframe. This policy aims to facilitate the prompt identification of contractors who have surpassed the two-year orientation limit using a clearly visible identifier. Such identification assists SickKids staff in recognizing contractors who require orientation or need to refresh their orientation. The orientation process is crucial for acquiring the necessary insights into SickKids property to execute work safely.

2.0 Definitions

Contractor Orientation: Contractor orientation refers to a systematic process designed to familiarize contractors with the policies, procedures, and specific requirements of a particular organization or work site. This orientation is conducted before contractors begin their work or within 14 days of beginning work. It aims to provide contractors with essential information regarding safety protocols, regulations, and any unique aspects of the environment they will be operating in.

Contractor Orientation Sticker: A contractor orientation sticker is a visible identifier, in the form of a sticker, issued to contractors who have completed the orientation process. The sticker serves as a tangible proof that the contractor has undergone the necessary training, familiarization, and education required by Sickkids. These stickers must be affixed to the contractor's hard hat to ensure easy visual recognition.

The sticker will display the year in which the contractor finalized their orientation and will adopt the color corresponding to that specific year. This color will undergo an annual change, aiding SickKids personnel in promptly identifying individuals who are due for orientation renewal.

3.0 Policy

The purpose of this policy is to establish guidelines for the issuance and utilization of Contractor Orientation Stickers, aiming to ensure that contractors on SickKids property are appropriately identified based on their completion of orientation and the need for renewal.

4.0 Responsibilities

OHSS:

- Develop this procedure in consultation with Facilities Development and Protection Services
- Distribute stickers to contractors following in-person orientation sessions.
- Distribute orientation stickers to contractors that have completed their contractor orientation online. Only provide stickers to contractors that have proof of orientation completion (e-learning certificate).

©The Hospital for Sick Children ("SickKids"). All Rights Reserved. This document was developed solely for use at SickKids. SickKids accepts no responsibility for use of this material by any person or organization not associated with SickKids. A printed copy of this document may not reflect the current, electronic version on the SickKids Intranet. Use of this document in any setting must be subject to the professional judgment of the user. No part of the document should be used for publication without prior written consent of SickKids.

- Ensure contractors on-sites have completed or renewed their orientation.
- Provide consultation, as necessary.

Facilities Development/Project Managers/Responsible Persons:

- Ensure General Contractor/Constructors completed the orientation prior to or within 14 days of being on site for work on a project.

Contractors:

- Responsible for notifying SickKids that orientation needs to be completed or renewed (Bi-Annual).

Contractor Workers:

- Responsible for affixing the orientation sticker to their Hard Hat in a visible manner while on SickKids property.

5.0 Procedure

5.1 Orientation and Sticker Display

1. Contractors who have successfully completed the orientation process will be provided with a distinctive sticker.

2. Contractors will be provided with the sticker upon completion of the in-class orientation. If the orientation is completed online, contractors must present their e-learning orientation certificate to the OHS member distributing the stickers. *Note: For online participants, once the orientation is competed, they will receive details about the building, floor, room, date, and time for sticker pickup.*

3. Contractors must affix the sticker to their hard hats to ensure it is easily identified.

4. The sticker shall prominently display the year in which the contractor completed their orientation.

5. The color of the sticker will correspond to the specific year, and this color will change annually.

5.2 Renewal Recognition:

The annual color change serves as a visual cue for SickKids personnel to easily identify contractors who require orientation renewal.

1. Contractors with outdated stickers will be considered overdue for orientation and may be subject to necessary actions, including restricting access to the premises until orientation is renewed.

©The Hospital for Sick Children ("SickKids"). All Rights Reserved. This document was developed solely for use at SickKids. SickKids accepts no responsibility for use of this material by any person or organization not associated with SickKids. A printed copy of this document may not reflect the current, electronic version on the SickKids Intranet. Use of this document in any setting must be subject to the professional judgment of the user. No part of the document should be used for publication without prior written consent of SickKids.

5.3 Annual Sticker Designs:

Year 2024 (Dark Blue)

Year 2025 (Orange)

Year 2026 (Green)

Year 2027 (Red)

Year 2028 (Purple)

Year 2029 (Yellow)

Year 2030 (Light Blue)

6.0 Related Documents

SickKids Contractor Safety

7.0 References

Occupational Health and Safety Act, R.S.O. 1990, c. O.1

©The Hospital for Sick Children ("SickKids"). All Rights Reserved. This document was developed solely for use at SickKids. SickKids accepts no responsibility for use of this material by any person or organization not associated with SickKids. A printed copy of this document may not reflect the current, electronic version on the SickKids Intranet. Use of this document in any setting must be subject to the professional judgment of the user. No part of the document should be used for publication without prior written consent of SickKids.

Appendix N

Activity Permit Policy

SickKids®

Activity Permit Policy

This is a CONTROLLED document for internal use only, valid only if accessed from the Policies and Procedures site.

1.0 Introduction

An activity permit is a work authorization form that must be completed and approved by specified SickKids stakeholders prior to work being undertaken by any external constructor, contractors and/or subcontractors on construction projects in any owned or leased SickKids locations.

The activity permit must also be completed for maintenance and/or continuous improvement projects that meet any of the below criteria. For these projects only, Plant Operations/Facility Operations is considered the Project Manager.

- Located in a patient care area
- Located in a high visibility or high traffic area
- Involves multiple trades or vendors
- Near or in a construction site
- Will last longer than 24 hours

2.0 Definitions

Activity Permit: Work authorization that must be completed prior to any work being conducted by any constructor, contractors and/or subcontractors on any construction project at SickKids locations as well as some maintenance and/or continuous improvement projects as specified above. The intent of this permit is to ensure that SickKids stakeholders have been made aware of the scope of the work and what controls will be put into place to minimize risk both onsite and externally to SickKids patients, visitors, and staff.

3.0 Policy

This policy outlines the process for creation and approval of activity permits and is applicable to all construction projects by any constructor, contractors and/or subcontractors in any owned or leased SickKids locations as well as some maintenance and/or continuous improvement projects as specified above. It is the expectation of SickKids that the constructor, contractors, and/or subcontractors will abide by all requirements specified in this policy.

4.0 Procedure

4.1 Pre-Work

The activity permit process is coordinated by the respective SickKids Project Manager for the project in question. When planning for jobs or projects that are going to be utilizing constructors, contractors and/or subcontractors in any SickKids locations, the Project Manager must work with them to complete an activity permit for review and approval. The start of work will not be allowed until the activity permit is completed and approved.

©The Hospital for Sick Children ("SickKids"). All Rights Reserved. This document was developed solely for use at SickKids. SickKids accepts no responsibility for use of this material by any person or organization not associated with SickKids. A printed copy of this document may not reflect the current, electronic version on the SickKids Intranet. Use of this document in any setting must be subject to the professional judgment of the user. No part of the document should be used for publication without prior written consent of SickKids.

The approval of an activity permit is contingent on the review and approval of several key pieces of documentation as specified in the Work Summary section on the activity permit form. To this end, the SickKids Project Manager and constructor, contractors and/or subcontractors should allow sufficient time for this document review, as this could impact the permit approval and the start of work.

All activity permits should be submitted at least 5 business days prior to the anticipated date of work to allow for appropriate hazard and operational impact assessments. SickKids reserves the right to refuse any permits that are submitted with insufficient notice.

The following stakeholders are required to sign-off on the permit:

- Contractor/Constructor
- SickKids Facility Operations
- SickKids Fire Marshall
- SickKids Infection Prevention and Control
- SickKids Occupational Health and Safety Services
- SickKids Protection Services

Once the activity permit has been approved, the SickKids Project Manager will communicate this to other stakeholders as required.

*__Note:__ If an activity permit has been approved for a project, any related work that is required outside of the boundaries or scope of the original activity permit will require a review of the work. Depending on this review, revisions to the activity permit may be required.

4.2 During Work

The constructor, contractors and/or subcontractors is required to obtain a signed copy of the activity permit from the SickKids Project Manager. The permit must always be posted in a publicly visible location at the worksite.

Upon completion of the work, the constructor, contractor and/or subcontractors is to inform the SickKids Project Manager so that the activity permit can be closed off.

A work stoppage and revocation of the activity permit will be initiated by the SickKids Project Manager if it is found that the constructor, contractors and/or subcontractors are:

- Commencing project work without an approved activity permit
- Producing hazards in any public or staff area that exceed occupational exposure limits
- Creating previously undisclosed hazards in any public or staff area that puts patients, visitors, or staff at risk

This work stoppage will remain in effect until an activity permit has been evaluated and approved or until the hazard can be controlled by the constructor, contractor and/or subcontractors to the satisfaction of SickKids. Under these circumstances, the company performing the work will be responsible for the costs associated with these delays.

4.3 Unforeseen Circumstances/Emergency Work

For construction projects, if work is required immediately outside of the intended project scope due to unforeseen circumstances or emergency situations (flood remediations, etc.) the constructor will liaise with the SickKids

©The Hospital for Sick Children ("SickKids"). All Rights Reserved. This document was developed solely for use at SickKids. SickKids accepts no responsibility for use of this material by any person or organization not associated with SickKids. A printed copy of this document may not reflect the current, electronic version on the SickKids Intranet. Use of this document in any setting must be subject to the professional judgment of the user. No part of the document should be used for publication without prior written consent of SickKids.

Project Manager who may coordinate the revision of the activity permit and/or other required documentation at the onset of the work and coordinate sign-off with the various stakeholders.

For non-construction projects, if work is required immediately due to unforeseen circumstances or emergency situations (flood remediations, etc.) and meets the definition of a maintenance and/or continuous improvement project that requires an activity permit, the contractors and/or subcontractors with liaise with SickKids Plant Operations/Facility Operations who may coordinate the completion of an activity permit at the onset of the work and coordinate sign-off with the various stakeholders.

4.4 Process Map

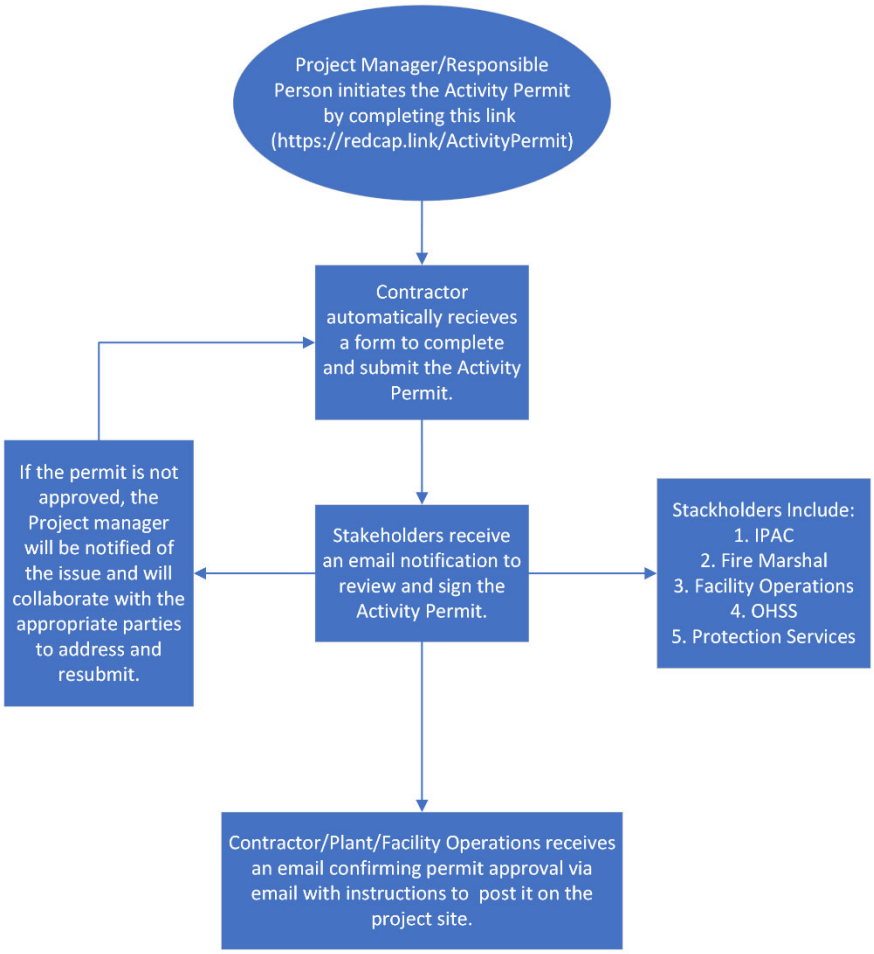

©The Hospital for Sick Children ("SickKids"). All Rights Reserved. This document was developed solely for use at SickKids. SickKids accepts no responsibility for use of this material by any person or organization not associated with SickKids. A printed copy of this document may not reflect the current, electronic version on the SickKids Intranet. Use of this document in any setting must be subject to the professional judgment of the user. No part of the document should be used for publication without prior written consent of SickKids.

5.0 Related Documents

RedCap – Activity Permit Link

RedCap - Activity Permit Full Form (PDF)

RedCap - Completed Activity Permit - Example (PDF)

SickKids Contractor Safety

6.0 References

Occupational Health and Safety Act, R.S.O. 1990, c. O.1

O. Reg. 213/91: Construction Projects

©The Hospital for Sick Children ("SickKids"). All Rights Reserved. This document was developed solely for use at SickKids. SickKids accepts no responsibility for use of this material by any person or organization not associated with SickKids. A printed copy of this document may not reflect the current, electronic version on the SickKids Intranet. Use of this document in any setting must be subject to the professional judgment of the user. No part of the document should be used for publication without prior written consent of SickKids.

Appendix O

Forms

SickKids®

Appendix O FORMS
(samples – not for use)

Hospital for Sick Children Appointment Form (ID Badge application)

PGCRL Badge Access Form

Fire Alarm By-Pass Form

Hot Work Permit

System Shutdown Request Form

Roof Work Review Form

Two Weeks Look Ahead Schedule (Sample)

Activity Permit

Code of Conduct & Privacy Compliance Attestation

SickKids

Appointment Form

Badge ID - HR use only

This form is required for individuals who are **not on payroll** and placed at SickKids for five (5) or more days. Complete and submit the form to your **HR Associate** at least 2 weeks prior to the start date. For Physicians, Clinical Fellows and Residents not on payroll, please contact **Medical Affairs.**

Legal First Name	Legal Middle Name	Legal Last Name	Preferred First and/or Last Name

Start Date	End Date	Department	Admin Contact Name and Extension	Previous/Current Badge ID

Individual is, or has previously been, at SickKids in a paid, unpaid or volunteer capacity: Yes (Badge ID Required) No/Don't Know

Individual is required to attend orientation: Yes No

If not Canadian citizen/Permanent Resident, is legally entitled to work/study in Canada. **Attach Work Permit and SIN.** Yes No

The following appointments must complete the **"Appendix A" Immunization Form** and provide the completed form to Occupational Health & Safety Services (OHSS).

- **Research Student** (externally funded and/or on site as part of course requirement)
- **Graduate Student - MSc Candiate** (externally funded only)
- **Graduate Student - PhD Candidate** (externally funded only)
- **Research Fellow** (externally funded)
- **Visiting Scientist** (RI Chief approval required)

The following appointments must complete the **"Healthcare Provider" Immunization Form** and provide the completed form to the designated Manager or Supervisor to retain in their files.

- **Student** (unpaid students on site as part of course requirement)
- **Medical Elective Student or Clinical Clerk** (identify which in description of activities)
- **Temporary Observer** (see **External Observer Request page** and **Observer policy** for requirements
- **Temporary Placement through Agency** (contact **Talent Acquisition Associate** for assistance)
- **Contractor** (includes vendors,trades, construction, commercial services)
- **Women's Auxiliary**

Brief description of activities:

Appointee Personal Information

Address:

Phone:

Personal email:

Note: HR does not maintain personal email address. Department must enter in HSC Directory.

Emergency Contact Information

Name:

Relationship to Appointee:

Phone:

Please submit this completed form along with all applicable backup documentation to your **HR Associate**. Note that the chart below is not an exhaustive list. **Additional backup may be requested and required to generate a 6-digit ID.**

	Memorandum of Understanding	Confirmation of Student Affiliation Agreement from LI	RTC Registry Form Confirmation Page	Appendix A Immunization Form	Healthcare Provider Form	Additional Documentation
Research Student	☑	☑ *U of T excepted	☑	Provide to OHSS		Valid Work/Study Permit/SIN - if applicable
Graduate Student	☑		☑	Provide to OHSS		Valid Study Permit - if applicable
Research Fellow	☑		☑	Provide to OHSS		Valid SIN (and Work Permit if applicable)
Visiting Scientist	☑			Provide to OHSS		Letter with RI Chief Approval
Student	☑	☑ *U of T excepted			Retained by Manager	Valid Work/Study Permit/SIN - if applicable
Medical Elective Student	☑ **				Retained by Manager	**Confidentiality Form
Temporary Observer					Retained by Manager	Refer to **External Observer** web page
Contractor	☑				Retained by Manager	

Manager's Name:	Manager's Signature:	Date:

The personal information contained on this form is collected in accordance with the Freedom of Information and Protection of Privacy Act to issue you a Hospital ID badge and obtain your emergency contact information. Questions about this collection can be directed to: Human Resources at 416-813-6680

Updated December 2023

PGCRL Badge Access Form

STEP 1 – REQUESTOR INFORMATION

Select one of the following: ☐ SickKids ☐ UHN ☐ U of T ☐ Other:_____

Employment status: ☐ Permanent ☐ Contract ☐ Volunteer ☐ Student ☐ Contractor ☐ External User ☐ Other:_____

Job Title: _____
First Name: _____
Last Name: _____
Preferred Name: _____

Phone/Ext: _____
Email: _____
Dept/Lab: _____
Manager: _____
Company: _____
Contractors only

SickKids ID: _____
6 Digit HID No: _____
*Found on reverse side of badge following the **

Start Date: _____
End Date: _____
If applicable

STEP 2 – ACCESS REQUIRED

Type of access: ☐ New ☐ Additional Access ☐ Extension ☐ Lost
Hours of access: ☐ 24/7 ☐ Mon-Fri (8am-6pm) ☐ After hours ☐ Weekends
Reason for access:
_____
_____

Floors required:
☐ Ground ☐ Bike Room ☐ SickKids-PGCRL Link
☐ 2 ☐ 5 ☐ 6 ☐ 8 ☐ 9 ☐ 10 ☐ 12 ☐ 14 ☐ 15 ☐ 16 ☐ 17 ☐ 18 ☐ 19 ☐ 20 ☐ 21

Rooms required:
_____

Special access required*:

**Access to special floors require authorization from the department Manager/Supervisor. Please obtain required approvals in Step 3.*

	Floor	Facility	Approvals Required (obtain one only)
☐	P1	Liquid Nitrogen Facility	Bijan Rafii, Craig Urekar
☐	LAS Dock	Lab Animal Services (LAS) loading dock	Bonny Welsh
☐	2	Behavioural Assessment Suite	Lisa Goos, Patricia Walton
☐	2	Centre for Advanced Structural Analysis (CASA)	Roland Pfoh, Stephanie Tammam
☐	3	Research Operations	Manager from Research Operations
☐	4/5	Lab Animal Services (LAS)	Sri Subbaraja, Urszula Kupinska
☐	5	Zebra Fish Facility	Ian Scott, Brian Ciruna, James Dowling, Sarah Hutchinson
☐	6	Data Centre	Wayne Arnold, Gary Nero
☐	6	Nanoscale Biomedical Imaging Facility	John Rubinstein, Samir Benlekbir
☐	7, 7UP, 22	Mechanical	Claudio Moro, Richard Ballesteros
☐	10	Dry Lab	Palma Ottaviani, PI from PEM Program
☐	11	Child Health Evaluative Sciences (CHES)	Marie Tavares, PI from CHES Program
☐	13	The Centre for Applied Genomics (TCAG) afterhours	Jo-Anne Herbrick
☐	18	Flow Cytometry Facility	Sheyun Zhao, John Moniakis

STEP 3 – APPROVALS

Last Name, First Name (Manager/Supervisor)	*Title*	
Last Name, First Name (Special Floor Access)	*Title*	
Last Name, First Name (Research Operations)	*Title*	

STEP 4 – SUBMISSION

Submit your completed form to Research Operations Reception (3rd floor). Additional access will be granted within 48 hours from the date of request. New badges can be collected on the individuals start date at the Badge Office, (555 University Ave, room M407).

SickKids
THE HOSPITAL FOR SICK CHILDREN

Fire Alarm System By-Pass Request Form

PROJECT INFORMATION	
Requester	
Date Service Required	
Location of Work / Room Number(s)	
Building	
Department	
Project Number	
Project Manager	
Project Details	

CONTRACTOR INFORMATION	
Prime Contractor	
On-Site Supervisor	
Contact Number (Cell)	

BY-PASS INFORMATION				
Type of By-Pass Requesting				
Zone(s) Affected				
Device Number(s)				
By-Pass Reason				
Work Being Done By				
Contact Number (Cell)				
Is On-Site Employee Licensed to Perform Work				
If Yes, Provide License #				
Fire Alarm Technician Certification Number is acceptable to the Ontario Fire Marshal's Office Test, Inspection, Repairs, Replaces or Alters components of the Fire Alarm System, Division C Section 1.2 of the Ontario Fire Code 2015 All person(s) inspecting, testing, maintaining or altering fire sprinkler systems must hold a valid certificate in good standing with the Ontario College of Trades as a Sprinkler and Fire Protection Installer.				
Inspection Frequency				
Scheduled By-Pass	Start Time		End Time	
Type of Testing (if required)				
Testing Start Time				

HOT WORK PERMIT INFORMATION			
Hot Work Permit Required			
Hot Work Permit #			
Type of Hot Work Being Performed			
If Other, Provide Details			
Start Time		End Time	
Company Performing Hot Work			
Contact Number (Cell)			
Name of Person Performing Work			
Cell Number			
Project Manager and Prime Contractor, Site Supervisor shall ensure that required precautions for hot work are followed.			

FIRE SPRINKLER IMPAIRMENT – RED TAG PROCEDURES			
Fire Sprinkler Impairment			
Impairment Equipment			
Area Protected			
Red Tag Permit # Equipment Valve Number(s)			
System Status			
Start Time		End Time	
Project Manager and Prime Contractor, Site Supervisor shall ensure that impairment checklist is completed.			

ADDITIONAL NOTES / COMMENTS / INSTRUCTIONS

BUILDING OPERATOR CHECKLIST	
Completed	**Task**
☐	Lead Hand: Assign Work-Order to Building Operator
☐	Building Operator: Meet with contractor
☐	Building Operator: Confirm devices to be bypassed
☐	Building Operator: Refer to bypass, Hot Work and Red Tag procedures
☐	Building Operator: Issue Hot Work and Red Tag permits (if required)
☐	Building Operator: B117 – Main Campus or P.G.C.R.L. 02.9604
☐	Building Operator: Call monitoring and security and T.F.S. as required
☐	Building Operator: Complete bypass
☐	Building Operator: Confirm bypass with Contractor
☐	Building Operator: Add notes to Work-Order and account for time
☐	Building Operator: Complete fire watch as required
☐	Lead Hand: Assign Work-Order to next shift Lead Hand for Restoration

RESTORTATION OF FIRE SYSTEM CHECKLIST	
Completed	**Task**
☐	Lead Hand: Assign Work-Order to Building Operator to restore fire system
☐	Building Operator: Meet with contractor
☐	Building Operator: Confirm devices to be restored
☐	Building Operator: Refer to bypass, Hot Work and Red Tag procedures
☐	Building Operator: Receive completed and signed Hot Work and Red Tag permits (if required)
☐	Building Operator: Ensure fire watch has been completed and signed – refer to procedures
☐	Building Operator: Call monitoring and security and T.F.S. as required
☐	Building Operator: Bypass audibles prior to restoration
☐	Building Operator: Complete restoration
☐	Building Operator: Confirm with contractor: All devices restored, no alarms, supervisories or troubles
☐	Building Operator: Return all completed permits to B117 – Main Campus or P.G.C.R.L. 02.9604
☐	Building Operator: Add notes to Work-Order, account for time and close Work-Order

BUILDING OPERATOR CONTACT INFORMATION Main Campus: B117 PGCRL: 02.9604	
Annex	**Atrium**
Pager: (416) 530-7011 Cell: (416) 771-4196	Pager: (416) 377-1854 Cell: (416) 771-8279

HOT WORK PERMIT

STOP!
Avoid hot work when possible! Consider using an alternative cold work method.

This Hot Work Permit is required for any temporary operation involving open flames or producing heat and/or sparks conducted outside a Hot Work Designated Area. This includes, but is not limited to brazing, cutting, grinding, soldering, torch-applied roofing and welding.

Part 1

Instructions for Permit Authorizer

1. Specify the precautions to take.
2. Fill out and keep **Part 1** during the hot work process.
3. Issue **Part 2** to the person doing the job.
4. Keep **Part 2** on file for future reference, including signed confirmation that the post-work fire watch and monitoring have been completed.
5. Sign off the final check on **Part 2**.

HOT WORK BY

☐ Employee

☐ Contractor _____

DATE	JOB NUMBER

LOCATION OF WORK (BUILDING/FLOOR/OBJECT)

WORK TO BE PERFORMED

NAME OF PERSON PERFORMING HOT WORK

NAME OF PERSON PERFORMING FIRE WATCH

I verify the above location has been examined, the Required Precautions have been taken, and permission is authorized for this work.

PERMIT AUTHORIZER (PRINT AND SIGN)

THIS PERMIT EXPIRES ON (LIMIT AUTHORIZATION TO ONE SHIFT):

DATE: TIME: ☐ AM ☐ PM

Note: Emergency notification on back of form.

Additional FM Resources:

Property Loss Prevention Data Sheet 10-3, *Hot Work Management*
Hot Work Permit form (F2630) via fmcatalog.com
Online training at fm.com/training-center
FM Approved equipment via fmapprovals.com

Required Precautions

Y	NA	
☐	☐	The fire pump is in operation and switched to automatic.
☐	☐	Control valves to water supply for sprinkler system are open.
☐		Extinguishers are in service/operable.
☐		Hot work equipment is in good working condition.

Requirements within 35 ft. (10 m) of hot work

☐	☐	Shield combustible construction using listed (e.g., FM Approved) welding pads, blankets and curtains.
☐	☐	Remove or shield nonremovable combustibles using listed (e.g., FM Approved) welding pads, blankets and curtains.
☐	☐	Isolate potential sources of flammable gas, ignitable liquid or combustible dust/lint (e.g., shut down equipment).
☐	☐	Remove ignitable liquid, combustible dust/lint and combustible residues.
☐	☐	Shut down ventilation and conveying systems.
☐	☐	Remove combustibles and consider a second fire watch on opposite side of floor, wall, ceiling or roof when openings exist or thermally conductive materials pass through.
☐	☐	Is work on a combustible building assembly (e.g., torch-applied roofing)? If yes, provide **ADDITIONAL REQUIRED PRECAUTIONS** below.

Hot work on/in closed equipment, ductwork or piping

☐	☐	Isolate equipment from service.
☐	☐	Remove ignitable liquid and purge flammable gas/vapor.
☐	☐	Prior to work, and/or during work, monitor for flammable gas/vapor. LEL reading(s):
☐	☐	Remove combustible dust/lint or other combustible materials.
☐	☐	Is work on/in equipment with nonremovable combustible linings or parts? If yes, provide **ADDITIONAL REQUIRED PRECAUTIONS** below.

Fire watch/fire monitoring the hot work area

Times listed are sufficient for majority. Use Table at back of permit for guidance for combustible concealed cavities, roof work or favorable factors.

☐		Perform a continuous fire watch during hot work.
☐		Perform a continuous fire watch post-work for ☐ 1 hour or Other ____ hours.
☐	☐	Perform fire monitoring for ☐ 3 hours or Other ____ hours.

ADDITIONAL REQUIRED PRECAUTIONS:

F2630 © 2018 - 2024 Factory Mutual Insurance Company
All rights reserved. (Rev. 08/2024)

WARNING

HOT WORK IN PROGRESS! Watch for fire!

Instructions

Person performing hot work: Record time started and display permit at hot work area. After hot work is completed, record time and leave permit displayed for fire watch.

Fire watch: Watch area during hot work and after work completion. Prior to leaving area, perform final inspection, sign, leave permit displayed and notify Fire Monitor or Permit Authorizer.

Fire monitor: Monitor area after post-work fire watch completion. Perform final inspection, sign and return to Permit Authorizer.

HOT WORK BY

☐ Employee

☐ Contractor _____

DATE	JOB NUMBER

LOCATION OF WORK (BUILDING/FLOOR/OBJECT)

WORK TO BE PERFORMED

NAME OF PERSON PERFORMING HOT WORK

NAME OF PERSON PERFORMING FIRE WATCH

I verify the above location has been examined, the Required Precautions have been taken, and permission is authorized for this work.

PERMIT AUTHORIZER (PRINT AND SIGN)

THIS PERMIT EXPIRES ON (LIMIT AUTHORIZATION TO ONE SHIFT):

DATE:	TIME:	☐ AM	☐ PM
Hot Work Date:	Start Time:	☐ AM	☐ PM
	Finish Time:	☐ AM	☐ PM
Post-Work Fire Watch Performed By	Finish Time:	☐ AM	☐ PM
Fire Monitor Name/Other ☐ Person ☐ Other	Finish Time:	☐ AM	☐ PM
Final Check Name	Time:	☐ AM	☐ PM

F2630 © 2018 - 2024 Factory Mutual Insurance Company
All rights reserved. (Rev. 08/2024)

Part 2

Required Precautions

Y	NA	
☐	☐	The fire pump is in operation and switched to automatic.
☐	☐	Control valves to water supply for sprinkler system are open.
☐		Extinguishers are in service/operable.
☐		Hot work equipment is in good working condition.

Requirements within 35 ft. (10 m) of hot work

☐	☐	Shield combustible construction using listed (e.g., FM Approved) welding pads, blankets and curtains.
☐	☐	Remove or shield nonremovable combustibles using listed (e.g., FM Approved) welding pads, blankets and curtains.
☐	☐	Isolate potential sources of flammable gas, ignitable liquid or combustible dust/lint (e.g., shut down equipment).
☐	☐	Remove ignitable liquid, combustible dust/lint and combustible residues.
☐	☐	Shut down ventilation and conveying systems.
☐	☐	Remove combustibles and consider a second fire watch on opposite side of floor, wall, ceiling or roof when openings exist or thermally conductive materials pass through.
☐	☐	Is work on a combustible building assembly (e.g., torch-applied roofing)? If yes, provide **ADDITIONAL REQUIRED PRECAUTIONS** below.

Hot work on/in closed equipment, ductwork or piping

☐	☐	Isolate equipment from service.
☐	☐	Remove ignitable liquid and purge flammable gas/vapor.
☐	☐	Prior to work, and/or during work, monitor for flammable gas/vapor. LEL reading(s):
☐	☐	Remove combustible dust/lint or other combustible materials.
☐	☐	Is work on/in equipment with nonremovable combustible linings or parts? If yes, provide **ADDITIONAL REQUIRED PRECAUTIONS** below.

Fire watch/fire monitoring the hot work area

Times listed are sufficient for majority. Use Table at back of permit for guidance for combustible concealed cavities, roof work or favorable factors.

☐		Perform a continuous fire watch during hot work.
☐		Perform a continuous fire watch post-work for ☐ 1 hour or Other ____ hours.
☐	☐	Perform fire monitoring for ☐ 3 hours or Other ____ hours.

ADDITIONAL REQUIRED PRECAUTIONS:

WARNING

HOT WORK IN PROGRESS!
Watch for fire!

In case of emergency, call the contacts listed below before attempting to extinguish the fire.

Contact	Number

Construction and Occupancy Factors for Post-Work Fire Watch and Monitoring Periods

Occupancy Factors	Construction Factors: Noncombustible construction or FM Approved Class 1 building materials		Construction Factors: Combustible construction without concealed cavities		Construction Factors: Combustible construction with unprotected concealed cavities	
	Watch	**Monitor**	**Watch**	**Monitor**	**Watch**	**Monitor**
Noncombustible with any combustibles contained within closed equipment (e.g., ignitable liquid within piping)	30 minutes	0 hours	1 hour	3 hours	1 hour	5 hours
Office, retail or manufacturing with limited combustible loading	1 hour	1 hour	1 hour	3 hours	1 hour	5 hours
Manufacturing with moderate to significant combustible loading except as noted below	1 hour	2 hours	1 hour	3 hours	1 hour	5 hours
Warehousing	1 hour	2 hours	1 hour	3 hours	1 hour	5 hours
Exceptions: Occupancies with processing or having bulk storage of combustible materials capable of supporting slow-growing fires (e.g., paper, pulp, textile fibers, wood, bark, grain, coal or charcoal)	1 hour	3 hours	1 hour	3 hours	1 hour	5 hours

When performing torch-applied roofing, apply additional precautions and conduct a minimum 2-hour fire watch and 2 hours fire monitoring. If an infrared camera is utilized, reduce to a 1-hour fire watch and 1 hour fire monitoring.

When performing hot work on/in equipment containing nonremovable combustible linings or parts, apply additional precautions and conduct a minimum 1-hour fire watch and 3 hours fire monitoring within the equipment, and in the surrounding areas per Table above.

SickKids

SHUT DOWN REQUEST FORM

Required to be completed and submitted to Project Manager for all shut down requests of any major services at SickKids sites

Shut Down Request Forms require to be submitted 20 business days prior to proposed physical shut down date

Date of Application _____

Date and Time of Shut Down _____

Anticipated period of shut down _____

SickKids Project Manager _____

SickKids Project Manager Contact No. _____

SickKids AR Number / Project Name _____

Project Cost Centre _____

Construction Company Name _____

Contractor Contact Person _____

Contractor's Contact No. _____ Cell Phone / Pager

Details of requested shut down

Description of Work Procedure and Risks

Approved by:

Project Manager _____ Date _____

Plant Operations Representative _____ Date _____

SickKids

ROOF WORK REVIEW FORM

The purpose of this review is to express any concerns over material, equipment, tools or debris on the roof work site area that may be at risk of descending from the roof area by placement of items to close to the edge of the roof, high winds or helicopter approach / take-off. The roof work area is to be kept in a safe condition at all times

SECTION 1

Roof Work Review Form is to be submitted by 1300 hrs the previous day of access to the roof area

Date of Application _____

Requested Date of Roof Access _____

Time Access Required _____

SickKids Project Manager _____

SickKids Project Manager Contact No. _____

Construction Company Name _____

Contractor Contact Person _____

Contractor's Contact No. _____ Cell Phone / Pager

ROOF WORK INFORMATION

Roof Location (mechanical room no. / roof access door no.

Type of work to be performed

SECTION 2

Date and Time Work Completed _____

Contractor's Verification

I have completed the work for the day and inspected the roof work area site. I verify that all material, equipment, tools and/or debris have been removed from the roof work area and is left in a safe condition

Contractor's Signature _____

PLANT OPERATIONS

SickKids' Building Operator _____

Date & Time of review _____

Building Operator Signature _____

Completed Form is to be submitted to Plant Operations at:
for Annex / Atrium: / Mcmaster / Alan Brown - Plant Operations office B 117
for PGCRL - Operations Control Room 02.9604

SickKids
THE HOSPITAL FOR SICK CHILDREN

Two Week Look Ahead Schedule (SAMPLE)

Project Name: IT Closet in Suite 039810
SickKids Project Manager: SK Project Manager's Name
Submission Date: June 25

Intended Work for the Week of: July 09
Contractor/Vendor Name: Company Name
Contractor PM Name & Contact: Project Manager, Contact Number

Monday	Tuesday	Wednesday	Thursday	Friday	Saturday	Sunday
Morning (6a.m.-12noon)	**Morning (6a.m.-12noon)**	**Morning (6a.m.-12noon)**	**Morning (6a.m.-12noon)**	**Morning (6a.m.-12noon)**	**Morning (6a.m.-12noon)**	**Morning (6a.m.-12noon)**
Mobilization Hoarding and Dust Controls Muffled noise periodically. **No shutdown required.**	Install Exhaust Fan Muffled noise periodically. **No shutdown required.**	Relocate Thermostat Install Emergency Power Muffled noise periodically. **No shutdown required.**	Install IT Rack **No shutdown required.**	Install Fiber & Panel Install Card Reader **No shutdown required.**	No Work Anticipated	No Work Anticipated
Noise Level: n/a	**Noise Level:** 5	**Noise Level:** 5	**Noise Level:** 10	**Noise Level:** 7	**Noise Level:** n/a	**Noise Level:** n/a
Afternoon (12noon-6p.m.)	**Afternoon (12noon-6p.m.)**	**Afternoon (12noon-6p.m.)**	**Afternoon (12noon-6p.m.)**	**Afternoon (12noon-6p.m.)**	**Afternoon (12noon-6p.m.)**	**Afternoon (12noon-6p.m.)**
Mobilization Hoarding and Dust Controls Muffled noise periodically. **No shutdown required.**	Install Exhaust Fan Muffled noise periodically. **No shutdown required.**	Relocate Thermostat Install Emergency Power Muffled noise periodically. **No shutdown required.**	Install IT Rack **No shutdown required.**	Install Fiber & Panel Install Card Reader **No shutdown required.**	No Work Anticipated	No Work Anticipated
Noise Level: n/a	**Noise Level:** 5	**Noise Level:** n/a	**Noise Level:** 10	**Noise Level:** 7	**Noise Level:** n/a	**Noise Level:** n/a
Evening/Night (6p.m.-6a.m.)	**Evening/Night (6p.m.-6a.m.)**	**Evening/Night (6p.m.-6a.m.)**	**Evening/Night (6p.m.-6a.m.)**	**Evening/Night (6p.m.-6a.m.)**	**Evening/Night (6p.m.-6a.m.)**	**Evening/Night (6p.m.-6a.m.)**
No Work Anticipated	No Work Anticipated	No Work Anticipated	Install Fiber & Panel **No shutdown required.**	Install Fiber & Panel Install Card Reader **No shutdown required.**	No Work Anticipated	No Work Anticipated
Noise Level: n/a	**Noise Level:** n/a	**Noise Level:** n/a	**Noise Level:** 7	**Noise Level:** 7	**Noise Level:** n/a	**Noise Level:** n/a

NOTE: Noise Level based on Scale of 5-10. Level 5: Quiet Work that may be heard periodically. Level 10: Impact to surrounding areas & floors above and/or below.

Site Safety Plan & Activity Permit

Please submit the Site Specific Safety Plan and complete the Activity Permit. If you have any issues or questions please reach out to the Sickkid's Project Manager.

Thank you!

General Information

Site safety plan

This plan must be reviewed and approved by SickKids prior to issuance of an Activity Permit. The General Contractor/Constructor is to amend as required by SickKids.

Construction Site Specific Safety Plan Template

The intent of this template is to identify the MINIMUM requirements of a Construction Site Specific Safety Plan for any constructor or designated contractor awarded work at any SickKids location. Submitters are required to elaborate and expand upon these requirements. Note that you may also be required to develop a separation and hoarding plan.

The Construction Site Specific Safety Plan shall be provided to the SickKids Project Manager prior to the start of work. Failure to submit the SSSP will result in the activity permit issuance, which will result in a delay of the start date.

DO NOT SUBMIT your company's safety manual.

Construction Site Specific Safety Plan Template (minimum requirements)

a. **Scope of Work:** narrative of the project scope associated with your contract including schedule and major project milestones.

b. **Designated On-Site Supervisor and Safety Representatives:** include contact information

c. **Safety Orientation Program:** process to orient workers and subcontractors to your safety rules and expectations including ongoing toolbox safety talks.

d. **Hazards Communication Program & Incident Reporting/Inspection**

e. **Hazard Assessment:** identification of hazards associated with defined project tasks. Please elaborate on highly hazardous tasks associated with the work (crane picks, scaffolding, working at heights, confined spaces, utility shut-downs, lockout/tagout, hazardous material abatement, hot work, trenching, etc.).

f. **Site Specific Emergency Response Plan & 24-hour emergency points of contact**

g. **Site Logistics Plan:** plan shall address staff/patient/public protection (including infection control), traffic plan, equipment and lay-down areas, site security, tire washing, emergency evacuation muster points, etc.

h. **PPE requirements**

i. **Accident Reporting and Investigation Procedures**

j. **Safety Audit/Inspection Procedures**

k. **Project Clean-Up Plan:** detail how your company plans on keeping the workplace clean and free of potential hazards.

(e.) This is an example of a site specific hazard assessment

Attachment: Hazard Assessment-Template(3).xlsx (404.3 kB)

Next Page >>

Save & Return Later

Powered by REDCap

Site Safety Plan & Activity Permit

Checklist and Upload

Site-supervisor Name

* must provide value

Site-supervisor contact number

* must provide value

Site Specific Safety Plan Checklist

* must provide value

- [ ] A. Scope of Work
- [ ] B. Designated On-Site Supervisor and Safety Representatives
- [ ] C. Safety Orientation Program
- [ ] D. Hazards Communication Program & Incident Reporting/Inspection
- [ ] E. Hazard Assessment
- [ ] F. Site Specific Emergency Response Plan & 24-hour emergency points of contact
- [ ] G. Site Logistics Plan
- [ ] H. PPE Requirements
- [ ] I. Accident Reporting and Investigation Procedures
- [ ] J. Safety Audit/Inspection Procedures
- [ ] K. Project Clean-Up Plan

Does your plan include the following topics

Please upload your Site Safety Plan

* must provide value

<< Previous Page

Next Page >>

Save & Return Later

Powered by REDCap

Site Safety Plan & Activity Permit

A A A

Activity Permit

Liability insurance & WSIB clearance certificates provided
* must provide value

- ◯ Yes
- ◯ No

Infection Control Prevention Measures Specified
* must provide value

- ◯ YES
- ◯ N/A

Afterhours access required?
* must provide value

- ◯ YES
- ◯ N/A

Security assistance required (keys, watches, etc.)?
* must provide value

- ◯ YES
- ◯ N/A

Fire alarm bypasses and/or sprinkler drain down required?
* must provide value

- ◯ YES
- ◯ N/A

Hot works permit required?
* must provide value

- ◯ YES
- ◯ N/A

Work in ceiling or removal of ceiling tiles required?
* must provide value

- ◯ YES
- ◯ N/A

Specified infection control measures in place?
* must provide value

- ◯ YES
- ◯ N/A

Roof access required?

- ◯ YES
- ◯ N/A

Loading dock access required?
* must provide value

- ◯ YES
- ◯ N/A

Waste bin required?
* must provide value

- ◯ YES
- ◯ N/A

Elevators booked/coordinated?
* must provide value

- ◯ YES
- ◯ N/A

Services shutdown requests completed?
* must provide value

- ◯ YES
- ◯ N/A

Dust, excessive noise, or odor generating activities?
* must provide value

- ◯ YES
- ◯ N/A

Asbestos or lead present in area?
* must provide value

- ◯ YES
- ◯ N/A

Designated Substances
* must provide value

- ◯ YES
- ◯ N/A

SDS's sent to PM
* must provide value

- ◯ YES
- ◯ N/A

Contractor Signature
* must provide value

<< Previous Page

Submit

Save & Return Later

Powered by REDCap

REDCap

Approved Activity Permit

The Sample activity permit has been approved by the OHS, IPAC, Security, and Fire Safety stakeholders.

Project Information

Sickkids PM	Contractor Name	Contractor Contact
Sample	Sample	_____
Sample		_____

Description of Activity

Work Location	
Sample	
Scope of Work	
Sample	
Start Date	**Expected Completion**
21-03-2024	21-03-2024

SAMPLE OF COMPLETED ACTIVITY PERMIT

Required Submittals

Liability Insurance & WSIB	Infection Control Preventative Measures
_____	_____

High-Risk Activities

Afterhours Access	Security assistance required	Fire alarm bypass/Sprinkler drain down
_____	_____	_____
Hot Works Permit	**Work in ceiling/Removing of Ceiling Tiles**	**Specified infection control measures in place**
_____	_____	_____
Roof Access Required	**Loading Dock Access**	**Waste bin**
_____	_____	_____
Elevators booked/coordinated	**Service shutdown**	**Dust, excessive noise, or odour generating activites**
_____	_____	_____
Asbestos or lead present	**Designated substances**	**SDS sent to PM**
_____	_____	_____

Approvals

OHS Signature	IPAC Signature	Fire Marshal	Protection Services
Justin Da Silva	Krista Cardamone	Randy Wiken	Randy Wiken

OHS Department Contact: 416-813-7654 X 415305

IPAC Department Contact: 416-813-8849 X 408849

Select the "Print" option in your web browser and choose to print to PDF to retain a copy for your records

This Project Activity Permit must be printed & posted in a conspicous place for the entire project

Attestation: Code of Conduct & Privacy Compliance

Project Number: …….

Project Name: ……

Contractor Company Name: ……

Site Supervisor Name & Badge Number: …….

Code of Conduct and Privacy Compliance Sign-off

Site Supervisors are responsible for ensuring all individuals with an affiliation with SickKids who are under their authority have read, understood, the following:

- *Code of Conduct Summary*, and
- *Privacy and Information Security Summary*.

By signing below, I acknowledge the above and agree that all individuals under my authority and I will:

- comply with the expectations/requirements outlined in the *Code of Conduct Summary* and *Privacy and Information Security Summary*.
- maintain the confidentiality of all information obtained in the course of our association with SickKids.
- only access, use, share or disclose private and/or confidential information for authorized purposes directly related to and required to carry out our job responsibilities at SickKids, and
- immediately report any instance (confirmed or suspected) of inappropriate access, use, sharing, disclosure of private and/or confidential information, and/or lost or stolen private and/or confidential information to Privacy.Office@SickKids.ca.

_____ _____

Name (Site Supervisor Signature) **Date**

The Hospital for Sick Kids Network Cabling Specifications

November 15th 2024

Ian Stegman
Senior Manager Network Service

Due to the competitive nature of this document, the information contained within is considered proprietary and confidential and shall not be copied, printed or otherwise reproduced without the express written permission of The Hospital for Sick Kids.

Specification Version History

Version #	Implemented	Revision	Approved	Approval	Reason
1	Gary Nero	1.1			
2	Gary Nero	1.2			Updated part numbers

Table of Contents

Section	Page #
I. General	**4**
A. Purpose of Document	4
B. Scope of Work – Typical	4
C. General Guidelines	5
D. Terminology from TIA 569	5
E. Applicable Regulatory References	8
F. The Hospital for Sick Kids Substitution Policy	12
G. Contractor Qualifications	12
H. Warranty	14
II. Subsystems and Components	**16**
A. Cabling Subsystem 1 – Horizontal Copper Cabling System	16
B. Cabling Subsystem 2 – Intrabuilding & Interbuilding Fiber	20
C. Racks, Cabinets, and Cable Management	23
D. Communications Grounding Network	26
E. Cable Pathways	32
F. Network Infrastructure Labeling	33
G. Cabling Accessories	34
III. Testing and Acceptance	**36**
A. General	36
B. Copper Channel Testing	36
C. Fiber Testing	36
D. System Documentation	37
E. Inspection and Acceptance	38
F. Post Installation Maintenance Agreement	39
IV. Sick Kids Special requirements	**40**
A. Additional and project specific requirements	40
B. Sick Kids Scope of Work Green Filed & Brown Field	40
V. Appendix A – Materials List	**41**

I. General

A. Purpose of Document

1. This document is to provide a standard defining the structured communications cabling systems to be installed within The Hospital for Sick Kids facilities. It is geared toward leveraging our legacy cabling infrastructure while upgrading to more recent technologies in new installations. The goal is to accomplish this in the most economic and systematic fashion possible, and in a manner compliant with the latest codes, cabling standards, and industry best practices.

2. Within this document, the facilities owner is The Hospital for Sick Kids, and shall be referred to as such, or as Network and Support services. Bidding low-voltage installers shall be referred to as “Installer” or “Contractor”.

3. It is the responsibility of the installing Contractor to evaluate these general recommendations and adapt them effectively to actual projects. The contractor is responsible for identifying and bringing to the attention of The Hospital for Sick Kids any design directions that may be improved. All such changes shall be approved in writing from Network and Support services.

4. This specification defines quality standards and practices common to all The Hospital for Sick Kids network cabling upgrades and Greenfield (new) projects. The system offered and quoted shall incorporate all features and facilities listed in this specification.

5. In addition to this cabling standard, individual projects will also have associated documentation such Requests for Proposals (RFP), facility drawings, and project schedules pertaining to that particular job. Such collateral will be referred to in this document as “Project-specific Documentation”, “Project Documentation”, or simply “Construction Documents”. Many of the requirements described herein may be detailed or expanded upon by such project-specific documents.

6. Any conflict between this general specification and any project-specific documentation shall be brought to the attention of The Hospital for Sick Kids and will be resolved by The Hospital for Sick Kids in writing.

7. Note that while many portions of this specification are addressed to "The Contractor", these requirements apply equally to architects, engineers, project managers, planning, or anyone doing network cabling and infrastructure work within The Hospital for Sick Kids facilities, whether those persons are outside contractors or persons directly employed by The Hospital for Sick Kids.

B. Scope of Work – Typical

1. Contractor shall be solely responsible for all parts, labor, testing, documentation, and all other processes and physical apparatus necessary to turn over the completed cabling system and associated infrastructure fully warranted and operational for acceptance by The Hospital for Sick Kids.

2. This specification includes structured cabling for the production Ethernet network but may address other systems that have converged onto Ethernet-style cabling. These associated systems may include VoIP, Building Automation Systems (BAS), Building Access Control, Security Cameras and Audio-Visual Systems.

3. The following cabling subsystems will be defined:

    a. Cabling Subsystem 1 – Horizontal Copper Cabling

    b. Cabling Subsystem 2 – Intrabuilding & Interbuilding Fiber Backbone Cabling OS2

    c. Cabling Subsystem 3 – Data Center Fiber Backbone Cabling OM3 and OS2

    d. Racks and Cable Management

    e. Bonding and Grounding

    f. Cable Pathways

    g. Network Labeling

    h. Cabling Accessories

4. If requirements of the project documents cannot be met during design or installation, a written description of the need for variance will be submitted to the Hospital for Sick Kids Project Manager for review by the Network and Support services Team.

C. General Guidelines

1. All voice telephony systems shall be VoIP unless otherwise specified in the project-specific documentation.

2. Any copper or fiber patch cords shall be factory terminated. Hand terminated patch cords will not be accepted.

3. All Greenfield (new) & Brownfield (existing) projects shall use Cat 6A cable.

4. Any deviation from Cat 6A cabling shall be approved in writing by The Hospital for Sick Kids.

5. The wiring configuration on Cat 6A systems shall be T568A.

6. Any communications/IT consulting engineers retained by The Hospital for Sick Kids shall be at the sole discretion of Network and Support services.

D. Terminology from TIA 569

1. New Terms for Telecommunications Spaces (Rooms)

    a. This section reviews some of the current terminology for communications rooms and spaces as defined in TIA 569-D (April 2015).

    b. Awareness of these new terms is important for communicating accurately and for clearly understanding language used in specifications and other documents.

    c. This specification will use both new and old terms side-by-side for clarity.

d. The table below shows some of the most important new terms and how they relate to traditional terminology:

Old Term(s)	New Term
Entrance Facility.	Entrance Room
Telecommunications Room, Equipment Room.	Distributor Room
Telecommunications Room, Equipment Room.	Telecommunications Space
Cross-connect, Patching System, Optical Enclosure.	Distributor
Horizontal Cross-connect. Usually copper patch panels in enterprise installations.	Distributor A
Intermediate Cross-connect, Intermediate Distribution Frame. Usually multimode optical enclosure in enterprise installations. Can apply to intra and interbuilding fiber cabling subsystems.	Distributor B
Main Cross-connect, Main Distribution Frame. Usually, Singlemode optical enclosure in enterprise installations. Can apply to intra and interbuilding fiber cabling subsystems.	Distributor C
Faceplate, Surface Box, Work Area Appliance.	Equipment Outlet
Work Area.	Equipment Outlet Location
Horizontal Cabling. Extends from Equipment Outlet to Distributor A, B, or C depending on size of cable plant. Usually balanced twisted pair cable in enterprise installations.	Cabling Subsystem 1
Extends from Distributor A to Distributor B or C, depending on size of cable plant. Usually 10 -micron intra-building & inter-building backbone fiber cable in enterprise installations. Singlemode fiber.	Cabling Subsystem 2
Connects Data Center installations, this is usually OM3-OM4 Multimode fiber & OS2 Singlemode Fiber.	Cabling Subsystem 3

Example of a logical cabling topology with the new terminology see illustration below:

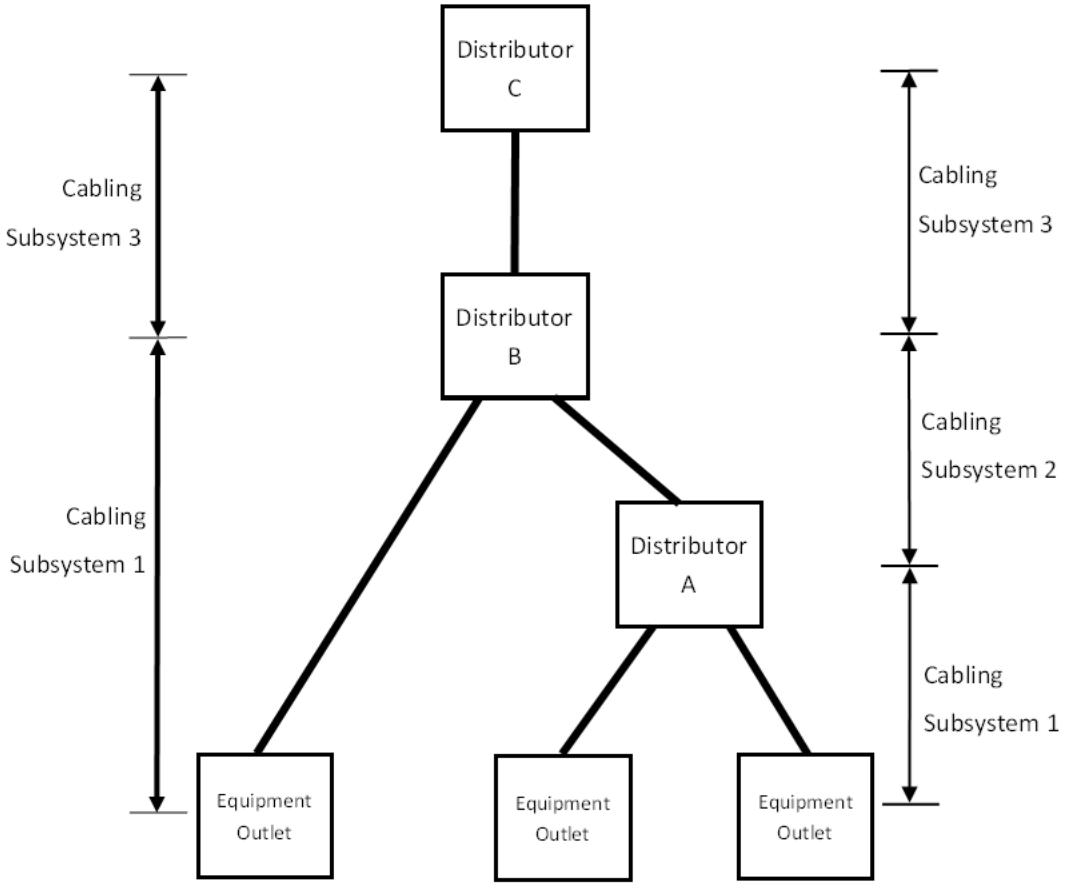

E. Applicable Regulatory References

1. The contractor is responsible for knowledge and application of current versions of all applicable standards and codes. In cases where listed standards and codes have been updated, Contractor shall adhere to the most recent revisions, including all relevant changes or addenda at the time of installation.

2. ANSI/TIA:

   a. ANSI/TIA-526-7-A (July 2015) Measurement of Optical Power Loss of Installed Single-Mode Fiber Cable Plant

   b. TIA-526.2-A (July 2015) Effective Transmitter Output Power Coupled into Single-Mode Fiber Optic Cable - Adoption of IEC 61280-1-1 ed. 2 Part 1-1: Test Procedures for General Communication Subsystems – Transmitter Output Optical Power Measurement for Single-Mode Optical Fiber Cable

   c. ANSI/TIA-4994 (March 2015) Standard for Sustainable Information Communications Technology

   d. ANSI/TIA-526-14-C (April 2015) Optical Power Loss Measurements of Installed Multimode Fiber Cable Plant

   e. ANSI/TIA-568.0-D (September 2015) Generic Telecommunications Cabling for Customer Premises (supersedes TIA-568-C.0 and TIA-568-C-1)

   f. ANSI/TIA-568-C.2 (August 2009) Balance Twisted Pair Communications and Components Standards

   g. TIA-568-C.2-1 (July 2016) Balanced Twisted-Pair Telecommunications Cabling and Components Standard, Addendum 1: Specifications for 100 Next Generation Cabling

   h. TIA-568-C.2-2 (November 2014) Balanced Twisted-Pair Telecommunications Cabling and Components Standard, Addendum 2: Additional Considerations for Category 6A Patch Cord Testing

   i. TIA-568-C.3 (June 2008) Optical Fiber Cabling Components Standard (will be superseded by ANSI/TIA-568.3-D after default ballot)

   j. TIA-568-C.3-1 (October 2011) Optical Fiber Cabling Component Standard- Addendum 1, Addition of OM4 Cabled Optical Fiber and array connectors (will be superseded by ANSI/TIA-568.3-D after default ballot)

   k. ANSI/TIA-568-C.4 (July 2011) Broadband Coaxial Cabling Components Standard

   l. ANSI/TIA-568.1-D (September 2015) Commercial Building Telecommunications Infrastructure Standard (supersedes ANSI/TIA-C.1)

   m. ANSI/TIA-569-D (April 2015) Telecommunications Pathways and Spaces

   n. ANSI/TIA-598-D (July 2014) Optical Fiber Cable Color Coding

   o. ANSI/TIA-570-C (August 2012) Residential Telecommunications Infrastructure Standard

   p. ANSI/TIA-606-B (June 2012) Administration Standard for Telecommunications Infrastructure

   q. ANSI/TIA-606-B-1 (December 2015) Administration Standard for Telecommunications Infrastructure Addendum 1 - Automated Infrastructure Management Systems - Addendum to ANSI/TIA-606-B

r. ANSI/TIA-607-D (November 2015) Generic Telecommunications Bonding and Grounding (Earthing) for Customer Premises

s. ANSI/TIA-758-B (March 2012) Customer-Owned Outside Plant Telecommunication Infrastructure Standard

t. ANSI/TIA-862-B (February 2016) Structured Cabling Infrastructure Standard for Intelligent Building Systems

u. ANSI/TIA-942-B (July 2017) Telecommunications Infrastructure Standard for Data Centers

v. ANSI/TIA-1005-A (May 2012) Telecommunications Infrastructure Standard for Industrial Premises

w. ANSI/TIA-1005-A-1 (January 2015) Telecommunications Infrastructure Standard for Industrial Premises, Addendum 1- M12-8 X-Coding Connector - Addendum to TIA-1005-A

x. ANSI/TIA-1183 (August 2012) Measurement Methods and Test Fixtures for Balun-Less Measurements of Balanced Components and Systems

y. ANSI/TIA-1183-1 (January 2016) Measurement Methods and Test Fixtures for Balun-Less Measurements of Balanced Components and Systems, Extending Frequency Capabilities to 2 GHz - Addendum to TIA-1183

z. TIA-1152 (November 2016) Requirements for Field Test Instruments and Measurements for Balanced Twisted-Pair Cabling

aa. TIA-1179-A (September 2017) Healthcare Facility Telecommunications Infrastructure Standard

bb. ANSI/TIA-4966 (May 2014) Telecommunications Infrastructure Standard for Educational Facilities

cc. TIA-455-104-B (February 2016) FOTP 104- Fiber Optic Cable Cyclic Flexing Test (supersedes TIA-455-104-A)

dd. TIA/EIA-455-25-D (February 2016) FOTP-25 Impact Testing of Optical Fiber Cables

ee. TIA-604-18 (November 2015) FOCIS 18 Fiber Optic Connector Intermateability Standard – Type MPO-16

ff. TIA-604-5-E (November 2015) FOCIS 5 Fiber Optic Connector Intermateability Standard- Type MPO

gg. TIA-5017 (March 2016) Telecommunications Physical Network Security Standard

hh. TIA-TSB-155-A (Reaffirmed 10-6-2014) Guidelines for the Assessment and Mitigation of Installed Category 6 Cabling to Support 10GBASE-T

ii. TSB-184 (July 2009) Guidelines for Supporting Power Delivery Over Balanced Twisted-Pair Cabling

jj. TSB-4979 (August 2013) Practical Considerations for Implementation of Multimode Launch Conditions in the Field

kk. TSB-190 (June 2011) Guidelines on Shared Pathways and Shared Sheaths

ll. TIA-TSB-162-A (November 2013) Telecommunications Cabling Guidelines for Wireless Access Points

mm. TSB-5018 (July 2016) Structured Cabling Infrastructure Guidelines to support Distributed Antenna Systems

nn. TIA-492AAAE (June 2016) Detail Specification for 50-µm Core Diameter/125-µm Cladding Diameter Class 1a Graded-Index Multimode Optical Fibers with Laser-Optimized Bandwidth Characteristics Specified for Wavelength Division Multiplexing

oo. TIA-492AAAB-A (November 2009) Detail specification for 50-µm core diameter/125-µm cladding diameter class Ia graded-index multimode optical fibers

pp. TIA-455-243 (March 2010) FOTP-243 Polarization-mode Dispersion Measurement for Installed Single-mode Optical Fibers by Wavelength-scanning OTDR and States-of-Polarization Analysis

qq. TSB-172-A (February 2013) Higher Data Rate Multimode Fiber Transmission Techniques

3. ISO/IEC

a. ISO/IEC TR 11801-99-01 Information technology – Generic cabling for customer premises: Guidance for balanced cabling in support of at least 40 GBit/s data transmission: Parts 1 and 2

b. ISO/IEC TR 29106 AMD 1 Information technology -- Generic cabling -- Introduction to the MICE environmental classification

c. ISO/IEC 24764 AMD 1 Information technology – Generic cabling for data centers

d. ISO/IEC 11801 AMD 1 AMD 2 Information technology – Generic cabling for customer premises

e. ISO/IEC 15018 AMD 1 Information technology – Generic cabling for homes

f. ISO/IEC 24702 AMD 1 Information technology – Generic cabling – Industrial premises

g. ISO/IEC 14763-1 AMD 1 Information technology – Implementation and operation of customer premises cabling – Part 1: Administration

h. ISO/IEC 14763-2 Information technology – Implementation and operation of customer premises cabling – Part 2: Planning and installation

i. ISO/IEC 14763-2-1 Information technology – Implementation and operation of customer premises cabling – Part 2-1: Planning and installation – Identifiers within administration systems

j. ISO/IEC 14763-3 Ed 2.0 Information technology -- Implementation and operation of customer premises cabling -- Part 3: Testing of optical fiber cabling

k. ISO/IEC TR 24704 Information technology – Customer premises cabling for wireless access points

l. ISO/IEC TR 24750 Information technology – Assessment and mitigation of installed balanced cabling channels in order to support 10GBASE-T

m. ISO/IEC TR 29125 IT Telecommunications cabling requirements for remote powering of terminal equipment

4. BICSI – Building Industry Consultative Services International – Published Standards

a. ANSI/BICSI 001-2009, Information Transport Systems Design Standard for K-12 Educational Institutions

b. ANSI/BICSI 002-2014, Data Center Design and Implementation Best Practices

c. ANSI/BICSI-003-2014 Building Information Modeling (BIM) Practices for Information Technology Systems

d. BICSI 004-2012, Information Technology Division Systems Design and Implementation Best Practices for Healthcare Institutions and Facilities

e. ANSI/BICSI 005-2016, Electronic Safety and Security (ESS) System Design and Implementation Best Practices

f. BICSI 006-2015 Distributed Antenna System (DAS) Design and Implementation Best Practices

g. ANSI/NECA/BICSI 568-2006, Standard for Installing Commercial Building Telecommunications Cabling

h. NECA/BICSI 607-2011, Standard for Telecommunications Bonding and Grounding Planning and Installation Methods for Commercial Buildings

5. BICSI – Building Industry Consultative Services International – Manuals

a. Telecommunications Distribution Methods Manual, 13th Edition

b. Information Transport Systems Installation Methods Manual (ITSIMM), 6th Edition

c. Outside Plant Design Reference Manual, 5th Edition

d. BICSI's ICT Terminology Handbook, Version 1.0

e. Telecommunications Project Management Manual (TPMM), 1st edition

f. Telecommunications Project Management Reference Document (TPMRD), 2nd Edition

g. BICSI's Special ICT Design Considerations, Version 1.0

h. Essentials of Bonding and Grounding, Version 1.0

6. National Electric Codes – Canadian electrical code applicable

a. National Electrical Safety Code (NESC) (IEEE C2-2012)

b. NFPA 70-2016, National Electrical Code© (NEC©)

c. ANSI/IEEE C2-207, National Electrical Safety Code®

d. National Electrical Code (NEC) (NFPA 70)

e. NFPA 72 National Fire Alarm and Signaling Code

f. Canadian Electrical code CEC CSA C22.1

7. ASHRAE

a. ASHRAE Standard 90.4P, Energy Standard for Data Centers and Telecommunications Buildings

8. OSHA Standards and Regulations – all applicable

9. Local Codes and Standards – all applicable

10. Anywhere cabling standards conflict with one another or with electrical or safety codes, Contractor shall defer to the NEC and any applicable local codes or ordinances, or default to the most stringent requirements listed by either.

11. Knowledge and execution of applicable standards and codes is the sole responsibility of the Contractor.

12. Any violations of applicable standards or codes committed by the Contractor shall be remedied at the Contractor's expense.

F. The Hospital for Sick Kids Substitution Policy

1. This is a performance-based specification developed from the experience of the Hospital for Sick Kids Network and Support services in providing exceptional solutions for all our facilities and departments. As such, substitution of specified products or systems is not allowed.

2. The contractor shall assume all costs for removal and replacement of any product installed in substitution of those specified. Such costs shall include but not be limited to labor, materials as well as any penalties, fees or costs incurred for late completion.

G. Contractor Qualifications

1. General

a. Contractor shall be a current Panduit One℠ Partner that has completed the Structured Cabling Deployment training (Panduit Certified Installer). A copy of the corporate Panduit manufacturer certification shall be included with all quotes.

b. Contractor shall have at least 5 years documented experience installing and testing structured cabling systems of similar type and size.

c. Contractor shall employ at least one BICSI Registered Communication Distribution Designer (RCDD) to sign off on all designs offered, including stamping the design with their current BICSI/RCDD stamp.

d. Contractor shall have all necessary permits, licenses, and inspections required for the performance of data, voice, and fiber optic cable installations.

e. At least 30 percent of the technicians installing low-voltage copper systems on the job shall have a current Panduit Certified Copper Technicians certificate.

f. At least 30 percent of the technicians installing any Fiber Distribution Systems shall have a current Panduit Certified Fiber Technicians certificate.

g. The Telecommunications contractor shall provide a Project Manager to serve as the single point of contact to manage the installation, speak for the contractor and provide the following functions:

- Initiate and coordinate tasks with the Hospital for Sick Kids Project Manager and others as specified by the project schedule.
- Provide day-to-day direction and-site supervision of Contractor personnel.
- Ensure conformance with all contract and warranty provisions.
- Acknowledge and remediate findings of The Hospital for Sick Kids weekly site project meetings.
- This individual will remain Project Manager for the duration of the project. The contractor may change Project Manager only with the written approval of The Hospital for Sick Kids.

h. Contractor Project Manager on site shall have completed the Panduit Structured Cabling Deployment training and hold certificates for both copper and fiber.

2. References and Response Times

a. Communication Contractor shall provide with bid, a list of four (4) reference accounts where similar Data, Voice, Fiber Optic Cable, and related equipment installation work was performed within the last year (twelve-month period).

3. Termination of Services

a. The Hospital for Sick Kids reserves the right to terminate the Communication Contractor's services if at any time it is determined the Communication Contractor is not fulfilling their responsibilities as defined within this document and all associated project documentation.

b. Upon termination, the Communications Contractor shall be restricted from the premises and compensated for the percentage of work completed satisfactorily.

c. Contractor's appearance and work ethic shall be of a professional manner. Dress shall be appropriate to the work being performed.

d. Conduct on The Hospital for Sick Kids property will be professional in nature.

e. Any person in the Contractor's employ working on a The Hospital for Sick Kids project considered by The Hospital for Sick Kids to be incompetent, disorderly, or for any other reason unsatisfactory or undesirable to Network and Support services, such person shall be removed from the Hospital for Sick Kids project.

4. Other Contractor Responsibilities

a. Confirmation of Pathway and Cable Manager sizing:

- Wherever cabling pathways or managers are installed, it is the Contractor's responsibility to confirm pathway or manager sizing to represent no more than 25% fill upon installation according to manufacturer's fill tables.

- Pathways deemed overfilled upon installation will not be accepted and shall be remedied at Contractor expense.

b. Contractor is responsible for the removal and disposal of all installation and construction debris created in the process of the job.

c. All work areas will be cleaned at the conclusion of the workday and no tools or materials shall be left in a manner as to pose a safety hazard.

d. Projects are not considered finished and will not be paid by The Hospital for Sick Kids until all debris, dust, etc. has been cleaned and removed to the satisfaction of The Hospital for Sick Kids.

e. Contractor shall remove all abandoned cable per Article 800 of the National Electrical Code and per TIA and BICSI standards, recycling these materials where possible. Removal of orphaned cable is mandatory. Contractors shall consider this when placing bids.

f. Contractor shall abide by all The Hospital for Sick Kids Security Policies pertaining to access and conduct while on The Hospital for Sick Kids property.

g. Contractor shall obey all posted speed limits and parking regulations at the Hospital for Sick Kids facilities where the work is being performed.

h. Contractor understands that illegally parked vehicles will be towed, Contractor is responsible for and will assume all costs associated with towing.

H. Warranty

1. The contractor shall be Panduit PCI (certified installer) and shall provide a 25-year Panduit System Warranty on all copper and fiber links and/or channels.

2. Panduit System Warranty shall meet the following criteria:

   a. A 25-year guarantee that the installed cabling system will pass the Commercial Building Telecommunications Standards cited in this document.

   b. This warranty will cover all registered links and/or channels.

   c. Contractor shall indicate in warranty documentation whether registered links are to be link or channel.

      - If links are covered, this warranty may be invoked only if the links are comprised entirely of Panduit components.

      - If channels are covered, this warranty may be invoked only if entire channel links are comprised of continuous Panduit components and patch cables.

   d. The communications Contractor will correct any problems and malfunctions that are warranty-related issues without charge for the entire warranty period.

   e. If the Panduit System Warranty is needed by The Hospital for Sick Kids within the warranted period and the original installer is no longer in business, Panduit shall find a substitute Panduit PCI (certified installer) contractor and assume costs to fulfill the obligations of the warranty.

f. Upon acceptance of the warranty paperwork and test results from the Contractor, Panduit will mail a notification letter to the installer and a notification letter with warranty certificate to The Hospital for Sick Kids.

g. The warranty period shall commence following the final acceptance of the project by The Hospital for Sick Kids and written confirmation of warranty from Panduit.

<END OF SECTION>

II. Subsystems and Components

A. Cabling Subsystem 1 – Horizontal Copper Cabling System

1. See Appendix A for Part Numbers

2. Installation Guidelines

   a. The installation of horizontal cabling shall be compliant with most recent versions of all applicable standards, national and local codes, as well as the local Authority Having Jurisdiction (AHJ).

   b. The cabling system and support hardware shall be installed so as not to obscure any valves, fire alarm conduit, boxes, or other control, security or life safety devices.

   c. Contractor shall use the same Category of performance for both cable and connecting hardware through the entire horizontal channel.

   d. Anywhere there is a conflict between standards, codes, installation specifications or project specific documentation contractor shall default to the most stringent.

   e. If clarification is needed, the contractor shall submit a written request for clarification to The Hospital for Sick Kids. Response from The Hospital for Sick Kids shall be in writing.

   f. All cable pulled and terminated shall be Cat 6A unless specified otherwise in the project documentation.

   g. Contractor is responsible for maintenance of maximum pulling tensions, minimum bend radius, and approved termination methods required by cited standards, as well as manufacturer's recommendations and industry accepted best practices.

   h. Contractor shall use low to moderate force when pulling cable. Maximum tensile load may not exceed 25' lbs. maximum pulling force per 4 pair cable.

   i. Bundles of cable shall be pulled using pulling socks to distribute the tensile force over all cables in the bundle.

   j. Contractor shall take care not to knot, snag or otherwise deform the cable while pulling. The jacket on installed cable shall be continuous, free from pinholes, splits, blisters, burn holes or other imperfections. Damaged or deformed cable shall be removed and replaced at no cost to The Hospital for Sick Kids.

   k. Bend radius on 4 pair cable shall never be below 4 times the cable outer diameter, or manufacturer's requirements, whichever is most stringent.

   l. Cables shall not be attached to lighting support wires nor touch the drop-ceiling assembly. Any portion of the communications cabling in contact with ceiling structures shall be remedied at Contractor expense.

   m. Cables shall be kept as far away from potential sources of EMI (electrical cables, transformers, light fixtures, etc.) as practical and in shall in no cases pass closer than recommended in cited TIA standards.

n. When using miniature horizontal cable or small diameter patch cables, the channel length shall be de-rated per manufacturer's recommendations.

o. The contractor shall take care to never deform the cable by over cinching with cable ties. All cable ties shall be cinched firmly, but not so firmly that the tie cannot be rotated or moved on the bundle by hand.

p. Cable bundles in telecom spaces (rooms) shall be dressed using only hook and loop style cable ties. Plastic ties shall not be used in The Hospital for Sick Kids telecom rooms and shall be removed and replaced with hook and loop ties at Contractor expense.

q. Cable ties on all cable bundles shall be applied at random intervals to avoid harmonic effects.

r. All horizontal cabling installed shall include a cable slack loop of not less than 12 inches at the Equipment Outlet and not less than 36 inches in the horizontal telecom room.

s. Equipment outlet cable slack shall be stored in the box behind the faceplate if there is room to do so without violating the bend radius of the cable according to manufacturer's recommendations.

t. Contractor may affix 12-inch slack loop above ceiling using hook and loop cable ties if allowed in the project specific documentation or otherwise in writing from The Hospital for Sick Kids. Cable loops touching the drop ceiling shall not be accepted.

u. Service loops in the telecommunications room may be wall mounted or contained in pathways or racking systems if done according to manufacturer and industry best practices.

v. All terminations on the new (Greenfield) Hospital for Sick Kids projects shall be terminated using the T568A pin-out (wire map).

w. All terminations in existing Hospitals for Sick Kids facilities (Brownfield), shall match the pin-out, unless otherwise specified in the project documentation.

x. Contractor shall terminate twisted pairs so that the last twist is never more than ½ inch from the point of termination (insulation displacement clip). Maintaining the last twist closer than ½ inch is preferred.

y. The contractor shall maintain the cable jacket as close as possible to the connecting hardware. Twisted pair conductors deemed by The Hospital for Sick Kids to be unnecessarily exposed shall be re-terminated at Contractor's expense.

z. Contractor shall be responsible for using plenum cable, ties and appliances in any air-return (plenum) spaces as required by applicable codes, standards, and the local AHJ (Authority Having Jurisdiction).

3. Copper patch cords Color Code

a. Blue: (D) Data

b. Green: (AV) Audio Visual

c. Violet: (WAP) Wireless Access Point

d. White: (BAS) Building Automation System

4. Copper Horizontal Cable **(Brown field and green field)**

- Category 6A copper cable, 4-pair, 23AWG, U/UTP, CMP, Blue, **(Green Field -New Building or Renovation, Brown Field)**
    - Category 6A/Class EA cable shall be constructed of 23 AWG copper conductors with FEP Plenum (CMP) or PE Riser (CMR) insulation.
    - The copper conductors shall be twisted in pairs and separated by a cross-divider.
    - All four pairs shall be surrounded by a metallic Vari-MaTriX tape cut into segments of varying length and a flame-retardant jacket.
    - The Vari-MaTriX tape shall minimize the cable diameter and suppress the effects of alien crosstalk while retaining UTP electromagnetic interference immunity.
    - Cable diameter: Plenum (CMP): 0.250 in. (6.4mm) nominal, Riser (CMR): 0.260 in. (6.6mm) nominal

5. Equipment Outlet Connectors

    a. Copper connectors shall have the following attributes **(Green Field - New Building or Renovation, Brown Field):**

    - Category 6A/Class EA channel and component performance.
    - 2 Certified channel performance in a 4-connector configuration up to 100 meters and exceeds the requirements of ANSI/TIA-568.2-D Category 6A and ISO 11801 Class EA standards swept up to 650 MHz for supporting 10GBASE-T transmission over twisted-pair cabling systems as part of the Panduit® TX6A™ 10Gig UTP Copper Cabling System Exceeds component requirements of ANSI/TIA-568.2-D Category 6A and ISO 11801 Class EA standards for supporting 10GBASE-Ttransmission over twisted-pair cabling systems.
    - PoE & PoH compliance: Rated for 2500 cycles with IEEE 802.3af / 802.3at and 802.3bt type 3 and type 4. Supports Power over HDBaseT up to 100 watts.
    - Conductor termination range: Wire cap compatible with 22 – 26 AWG solid or stranded cable with conductor insulation diameters of 0.060 in. max and overall cable O.D. 0.200 in. to 0.330 in

6. Equipment Outlet Appliances – Adapter

    a. Adapter shall have the following attributes:

    - Mounts behind standard GFCI faceplates.
    - Mini Com rectangular adapter.

7. Equipment Outlet Appliances – Surface Mount Boxes

    a. Surface mount boxes shall have the following attributes:

    - Mounts easily with screws, adhesive tape or optional magnet.
    - Box is made of ABS.

- Quick Release Cover.
- Available in 1, 2 ,4, 6 port configurations.
- Accepts most Mini-Com® Modules, for easy moves, adds, and changes.

8. Copper Horizontal Patch Panels

   a. Patch panels shall have the following attributes:

      - 24-port, 1 RU
      - 48-port, 2 RU

9. Copper Patch Cords – Work Area

   a. Copper patch cords shall have the following attributes:

      - Category 6/Class E or Category 6A/Class Ea.
      - 24 AWG UTP patch cord with
      - Patch cords are offered in multiple lengths and colors for design flexibility.

10. Copper Patch Cords – Telecom Room

    a. Copper patch cords shall have the following attributes:

       - Category 6A/Class Ea.
       - UTP, small diameter patch cords are constructed of 28 AWG, unshielded, twisted pair, stranded copper (dual-rated CM/LSZH) cable with high performance RJ45 modular plugs.
       - Patch cords are offered in multiple lengths and colors for design flexibility.

11. Zone Cabling – Zone Enclosures

    a. Zone enclosures shall have the following attributes:

       - Attribute to be determined by: The Hospital for Sick Kids.

12. Special Applications – Field Term Plugs

    a. Field term plugs shall have the following attributes:

       - The TX6A™ Category 6A UTP Field Term RJ45 Plug is a simple-to-attach plug for field termination of 4-pair unshielded twisted pair cable.
       - Providing Category 6A performance the TX6A™ plug is also compatible with Category 6 and 5e systems.

- The two-piece straight and up/down angled TX6A™ plug terminates 4-pair, 22 - 26 AWG, 100-ohm unshielded twisted pair cable and uses proven TG-style forward motion termination technology to optimize performance by maintaining cable pair geometry while eliminating conductor untwist.

B. Cabling Subsystem 2 – Intrabuilding & Interbuilding Fiber

1. See Appendix A for Part Numbers

2. Installation Guidelines (Applies to all Fiber Trunks)

   a. Fiber terminations shall be done according to recommendations of TIA, manufacturer's requirements, and accepted industry best practices.

   b. Fiber optic cabling system additions and upgrades to existing facilities (Brownfield) shall match the fiber type (OM/OS designation) of the system to which it is being installed. Contractor shall under no circumstances mix different OM/OS classes of cable or termination devices (connectors) within the same channel unless specifically instructed to do so within the project specific documentation.

   c. When installing fiber cable, Contractor shall maintain a minimum bend radius of 20 times the outer diameter of the cable when it is under load (being pulled).

   d. Fiber service loops shall be stored to maintain a minimum bend radius of 10 times the outer diameter of the cable.

   e. Optical fiber shall only be pulled using its internal strength member in conjunction with a properly rated multi-weave mesh grip and swivel pulling eye.

   f. All unjacketed fiber shall be contained within appropriate fiber enclosures. Exposed tight-buffered, fan-out or loose-tube strands will not be tolerated and shall be remedied at Contractor's expense.

   g. Direct connection of terminated fiber backbone links to equipment is not allowed. All fiber connections shall go through a fiber enclosure interconnect and connect to active equipment via fiber jumpers.

   h. Contractor shall perform fiber testing of all strands according to guidelines in the "Testing and Acceptance" section of this document.

   i. Service loop (slack) in telecommunications rooms shall be at least 3 meters. Consult project documentation for length of service loops and storage method within a specific telecom room or space.

   j. Slack shall be stored per manufacturer instructions inside the enclosure or stored outside the enclosure using appliances built for that purpose. Consult project documentation for details on storage of service loops.

   k. Fiber pulls using multiple pull points shall use the "figure-8" technique any time excess cabling is piled on the floor as slack to supply the next pull-point.

   l. Cable shall be rolled off the spinning cable reel, not pulled off the end.

   m. During all fiber cable pulls Contractor shall have one person at each end of the pull to ensure proper cable pay out and pile up without damage to the fiber.

n. Fiber backbone cables shall be installed separately from horizontal distribution cables. Under no circumstances may copper and fiber cables be pulled in common bundles.

o. In pathways containing both fiber and copper cables, the fiber cable must either be of armored construction, or segregated in innerduct.

p. Where cables are housed in sleeves or conduits, the backbone and horizontal cables shall be installed in separate conduits or the fiber segregated in separate innerduct within the conduits.

q. Fiber shall be segregated within racks and patching systems unless instructed otherwise in the project documentation.

r. Where possible fiber enclosures shall be mounted at the top of equipment racks and the fiber cable kept separate from copper cable.

s. Contractor shall inspect fiber end faces with a fiber scope and clean the connectors (if needed) whenever plugging in a fiber connector.

3. Fiber Between Telecom Rooms

a. Backbone fiber cable between telecoms rooms on different floors within building shall have the following attributes:

- Panduit® Opti-Core® Fiber Optic Indoor Interlocking Armored and or non-Armored Cable is an integral part of the Panduit end-to-end fiber optic solution, designed to support today's data needs while meeting tomorrow's ever-advancing network requirements.
- Opti-Core® Fiber Optic Indoor Interlocking Armored and or non-Armored Cable is used within buildings to provide high-density connectivity and ease of installation.
- Interlocking aluminum armor eliminates the need for inner duct or conduit to provide a smaller crush resistant pathway for improved design flexibility and lower installed cost.
- Applications include intra-building backbones, building backbones, and horizontal installations for riser (OFCR), plenum (OFCP), and harsh environments.
- Singlemode fiber

4. Intrabuilding Fiber Cable (Optical Multimode)

a. Intrabuilding fiber cable between telecoms rooms on different floors within building shall have the following attributes:

- Opti-Core® Fiber Optic Distribution Cable is an intra building backbones, routing between telecommunications rooms and connectorized cables in riser and plenum environments.
- Opti-Core® Fiber Optic Distribution Cable meets or exceeds the requirements of Telcordia GR-409 and with relevant EIA/TIA-455 series FOTPs for fiber optic cables.
- Opti-Core® Fiber Optic Distribution Cable features the highest quality OM3 and OM4 laser optimized fiber to support10 Gb/s applications while maintaining compatibility with existing 50µm multimode systems.

- Standard Singlemode “single jacket” designs feature 900µm tight-buffered fibers surrounded by aramid yarn strength members.

5. Data Center

   a. Data center fiber optic infrastructure Multimode and Single mode pre-terminated fiber and copper system.

6. Fiber Connectors

   a. Fiber connectors shall have the following attributes:

      - LC OptiCam® Pre-Polished Connectors with rear pivot latch shall be ANSI/TIA-604-FOCIS-10 compatible and contain a factory-terminated fiber, eliminating field polishing and adhesive.
      - LC pre-polished connectors shall have an average insertion loss of 0.3dB per mated pair for multimode and Singlemode fiber.
      - LC pre-polished connectors shall captivate fiber and buffer in one action allowing for up to two re-terminations with no degradation in performance.

   b. Fiber Adapter Panels shall have the following attributes:

      - Fiber adapter panels contain TIA/EIA-604 FOCIS compliant or compatible simplex or duplex fiber optic adapters and meet or exceed TIA/EIA-568-C.3 requirements.
      - Fiber adapter panels include horizontal and vertical MPO adapters, LC, keyed LC, SC, ST, FC, MT-RJ or E-2000 fiber optic adapters.
      - Fiber optic adapters include phosphor bronze or zirconia ceramic split sleeves to fit specific network requirements.

7. Fiber Patch Cords (jumpers)

   a. Fiber patch cords (jumpers) for intrabuilding fiber shall have the following attributes:

      - Fiber optic patch cords and pigtails provide interconnect and cross-connect of applications over installations in entrance facilities, telecommunications rooms, data centers and at the desk.
      - Patch cords support network applications in main, horizontal and equipment distribution areas and are available in riser (OFNR), and low smoke zero halogen (LSZH) rated jacket materials to comply with local cabling ordinances.
      - Pre-terminated fiber optic pigtails support fusion splice field termination applications.
      - Fiber optic patch cords and pigtails are available in OM4, OM3, OM2, OM1, or OS1/OS2 fiber types to meet the demands of Gigabit Ethernet, 10 Gigabit Ethernet.

8. Fiber Enclosures

   a. Fiber enclosures for fiber links between buildings shall have the following attributes:

- Rack mount fiber enclosures shall house, organize, manage and protect fiber optic cable, terminations, splices, connectors and patch cords.
- Enclosure shall accommodate all Panduit trunk cables, connectors, patch cords, fiber adapter panels (FAP) and fiber mount panels (FMP).
- The enclosure shall include integral cable management and bend radius control for transition to vertical cable managers.
- Fiber optic enclosures shall be constructed of steel material.
- Molded front and back doors shall be removable for cabling and connector installation.
- 1 RU and 2 RU enclosures shall provide full front and rear access with a drawer that slides forward and backward.
- Fiber Splicing shall be fusion splicing with the use of splice trays and required materials for splicing.

C. Racks, Cabinets, and Cable Management

1. See Appendix A for Part Numbers

2. Installation Guidelines

   a. Racks shall be securely attached to the concrete floor using appropriate mounting hardware.

   b. All racks shall be grounded to the telecommunications ground bus bar in accordance with cited standards the bonding and grounding section of this document.

   c. Rack mount screws (#12-24) not used for installing fiber panels and other hardware shall be bagged and left with the rack upon completion of the installation

   d. In telecommunications rooms with multi-bay rack rows, Contractor is responsible to include in design interbay routing pathways at the top, middle, and bottom of each rack to provide efficient and neat patch routing between any two points within rack rows.

e. See the 2-post rack configuration example below for general guidelines for pathways between ganged racks:

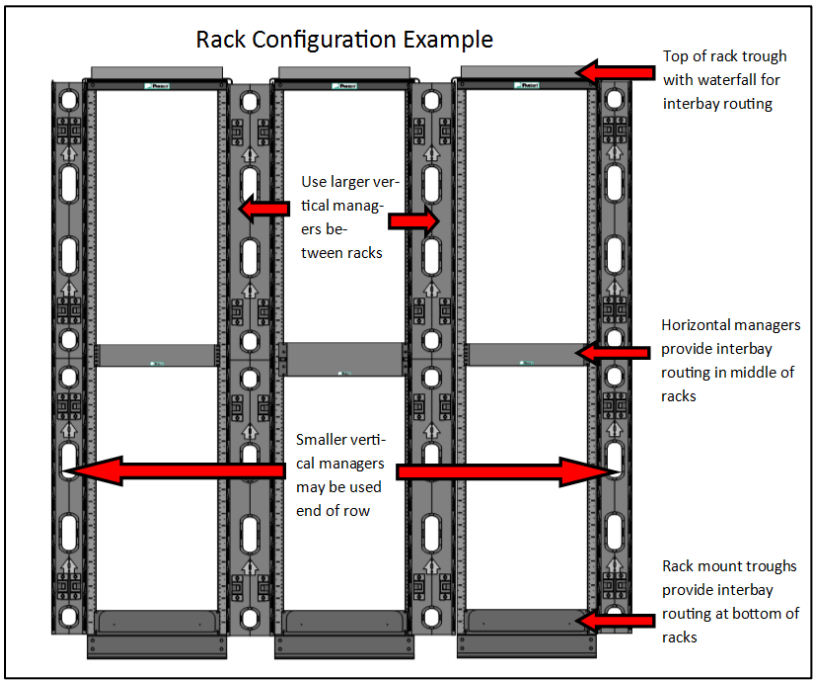

f. For bottom-of-rack interbay routing where cable quantities exceed capacity of interbay troughs, Contractor should substitute 4RU troughs.

g. All racks shall be outfitted with a vertical grounding busbar along one rail, with all equipment bonded to ground according to the Bonding and Grounding Standards cited in this document. See Bonding and Grounding section of this document for details.

h. Cabinets should be positioned to create aisle widths able to accommodate the movement and installation of the largest equipment anticipated.

i. Minimum aisle width is 3 feet clearance in the front of the cabinet and not less than 2 feet of clearance in the rear. Consult project documentation for clearance requirements on a specific job.

j. Cabinets shall be secured to the building structures according to the manufacturer's instructions and in compliance with applicable codes, standards, and the requirements of the local AHJ. Please also refer to project-specific documentation as appropriate.

k. Racks and cabinets shall be individually electrically bonded to the communications earthing system according to the manufacturer's instructions and in compliance all applicable standards, codes and the requirements of the local AHJ.

l. All cabinets shall be clearly identified at both the top and bottom of the in both the front and back of each cabinet with a large label (not less than 1" in height). Labels must be visible with the cabinet doors open or closed.

m. Empty horizontal spaces in cabinets in equipment rooms may be blanked with panels or blanking shades to facilitate hot/cold aisle cooling strategies. Consult project documentation for blanking requirements.

n. Cable entrances in tops of cabinets shall be sealed using preinstalled brushes or using the appropriately sized Panduit cool boot seals.

3. Four-Post Communication Racks

a. Four-post communications racks shall have the following properties:

- The telecommunications rack shall meet EIA/ECA-310-E standards, be 42, 45 or 52 RU, constructed of steel and capable of accepting 19" wide EIA equipment.
- The rack shall include adjustable front and rear equipment mounting rails. The equipment mounting rails shall be #12-24 or cage nut square opening style mounting.
- The adjustable equipment mounting rails shall include printed rack unit numbering and can be flipped by the user for either numbers up or numbers down.
- The rack shall accept shelve units and equipment brackets.
- The front and rear structural posts of the rack shall be capable of mounting PatchRunner™ Vertical Cable Managers and accessories such as power outlet units, slack spools, zero RU brackets, thermal ducting and vertical filler panels.
- The rack shall also accept optional casters mounted to the bottom of the rack.
- The construction method shall ensure an electrically bonded structure for ease of grounding data equipment rack shall meet EIA-310D standards and be constructed of extruded aluminum or steel capable of accepting 19" wide EIA equipment.

4. Two-Post Communications Racks

a. Two-post communications racks shall have the following properties:

- The data equipment rack shall meet EIA-310D standards and be constructed of extruded aluminum or steel capable of accepting 19" wide EIA equipment.
- The telecommunications rack shall be constructed of extruded aluminum.
- Rack construction method shall ensure an electrically bonded structure for ease of grounding.
- The 3" channel rack shall be UL listed for 1000 lbs. load rating and the 6" channel rack shall be UL listed for 1500 lbs. load rating.
- The equipment mounting rails shall be double-sided #12-24 EIA universal mounting hole spacing.
- The equipment mounting rails shall include printed rack space identification on the front and back and be numbered up.
- The channel of the rack shall be capable of mounting PatchRunner™ Vertical Cable Managers. 24 #12-24 mounting screws shall be included with the rack.

5. Rack-mounted Cable Management – Vertical Managers

   a. Contractor shall size vertical cable managers to represent not more than 25% fill by manufacturer tables based on worst cast density estimates.

   b. Contractor shall use larger vertical cable managers between racks as described elsewhere in this section.

   c. Rack-mounted cable management – vertical managers shall have the following properties:

      - The vertical cable manager shall consist of a metal backbone with cable management fingers that align with EIA rack spacing.
      - The fingers shall be molded out of plastic and provide integral bend radius control throughout the entire length.
      - The backbone shall have pass through holes for front to back cabling, with the option to blank off with a plug.
      - The manager shall accept a metal, hinged, push-to-close door that can open to the right or left. The door support brackets shall be integrated into the manager with no assembly required.
      - The manager shall accept plastic slack management spools that can be repositioned as required. The vertical panel shall be able to manage all the cable on the rack without the aid of horizontal cable managers.

6. Rack-mounted Cable Management – Horizontal Managers

   a. Contractor shall size horizontal cable managers to represent not more than 25% fill by manufacturer tables based on worst cast density estimates.

   b. Rack-mounted cable management – horizontal managers shall have the following properties:

      - The high capacity horizontal cable managers shall be capable of managing high performance cable on the front and rear of any 19" EIA rack.
      - The high capacity horizontal cable managers shall be molded plastic with bend radius fingers that protect the cable.
      - The fingers shall be inset towards the rack to allow easy access to patch cords and terminations. Standard pass through holes shall incorporate bend radius control.
      - Dual hinged covers shall allow access to the cable pathway.

D. Communications Grounding Network

1. See Appendix A for Part Numbers

2. Installation Guidelines

a. Contractor is responsible for bonding to ground all newly placed equipment and installed racks or cabinets per the TIA Standards.

b. All racks, metallic backboards, cable sheaths, metallic strength members, splice cases, cable trays, etc. entering or residing in the entrance facility or distributor (telecom) rooms shall be grounded to the respective PBB (Primary Bonding Busbar otherwise known as TMGB – Telecommunications Main Grounding Busbar) or SBB (Secondary Bonding Busbar otherwise known as TGB – Telecommunication Grounding Busbar) using a minimum #6 AWG stranded copper bonding conductor and compression connectors.

c. Metallic panels attached to the rack or cabinet shall be bonded to the rack or cabinet using a green thread forming screw.

d. The copper conductor size shall be upgraded based on the largest power conductor feeding any rack-mount equipment.

e. All jacketed wires used for telecommunications grounding purposes should be identified with green or green with yellow stripe insulation. Non-insulated wires shall be identified at each termination point with a wrap of green tape.

f. All cables and busbars shall be identified and labeled in accordance with the labeling standards cited in the Regulatory References section of this specification.

g. The TBB (Telecommunications Bonding Backbone) shall adhere to the recommendations of the ANSI/TIA grounding and bonding standards cited in the Regulatory References section of this document and shall be installed in accordance with cited standards and best industry practices.

h. Installation and termination of the main bonding conductor to the building service entrance ground shall be performed by a licensed electrical contractor.

3. Room Busbars

a. All Telecommunications spaces and distributor rooms shall have installed an appropriately sized wall-mount busbar with BICSI hole spacing that bonds to the building bonding backbone.

4. Bonding to the Service Equipment (Power) Ground

a. The bonding conductor for telecommunications shall bond the PBB (Primary Bonding Busbar) to the service equipment (power) ground and building steel.

5. Entrance Room

a. The following figure illustrates the grounding in an Entrance Room.

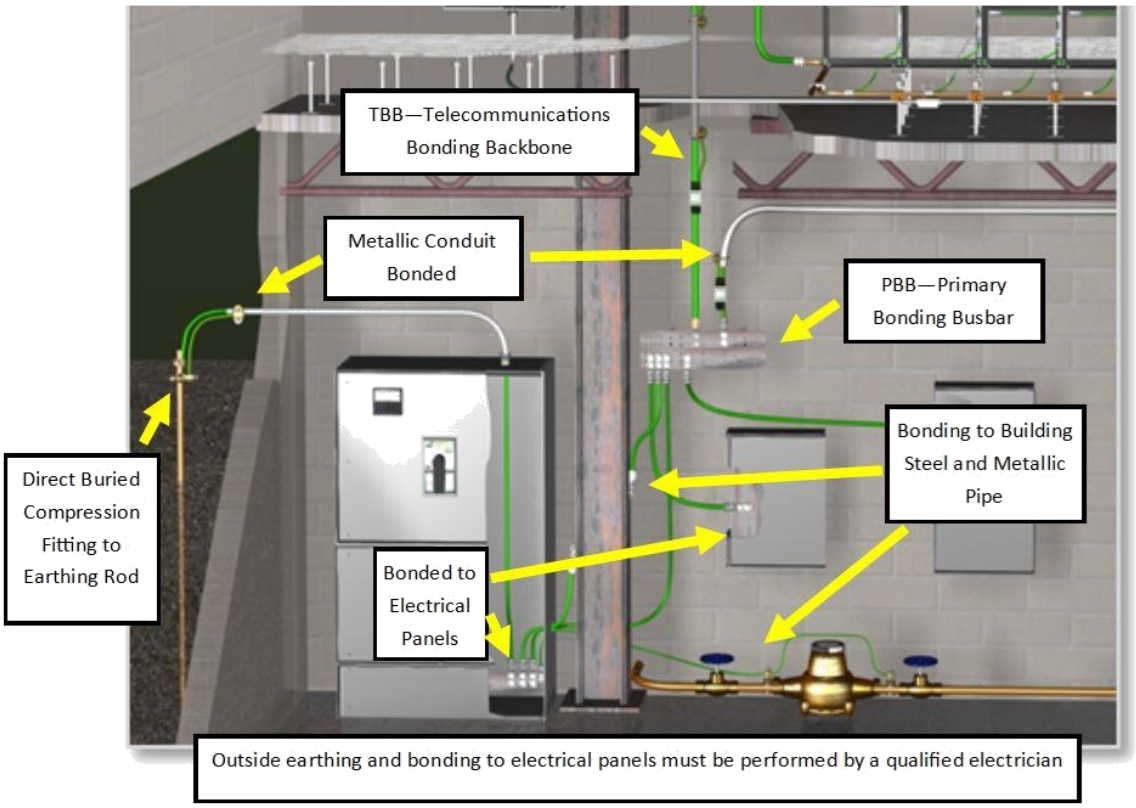

b. Entrance room bonding shall have the following properties:

6. Distributor (Telecommunications) Rooms

a. Within the telecommunications rooms and data centers all pathways and racks shall be grounded and bonded as indicated in the diagram below.

b. The contractor is responsible for properly grounding all network equipment, racks and cabinets and bonding them to the wall mounted busbars as described in the TIA 607 series of standards.

c. All newly installed racks and cabinets shall have installed a Panduit vertical strip mounted along one equipment rail to serve as a clean, low-resistance bonding place for equipment grounding jumpers used to bond equipment such as chassis switches, that come equipped with a designated grounding pad, back to the rack.

d. Smaller equipment without an integrated grounding pad shall be bonded to the vertical busbar through the use of a thread-forming grounding screw that is anodized green and includes serrations under the head to cut through oxidation or paint on the equipment flange.

e. Larger equipment (chassis switches) with a designated grounding terminal shall be bonded to the vertical busbar with an EBC (equipment bonding conductor) kit built to that purpose.

f. Contractor shall take care to clean (wire brush, Scotch Brite pads) any metallic surface to be bonded down to bare metal and apply a film of anti-oxidation paste to the surfaces prior to effecting the bond.

g. All bonding lugs on racks and busbars shall be of two-hole irreversible compression type. Mechanical lugs and single-hole lugs will not be accepted and shall be removed and replaced at Contractor's expense.

h. Every rack or cabinet shall have an individual bonding conductor into the grounding network, serially connecting (daisy-chaining) of racks is expressly forbidden and will not be accepted.

i. Rack Bonding Conductors (RBC) may tap into an overhead or underfloor aisle ground, or may run to the wall-mounted grounding busbar in smaller Telecommunications rooms containing 5 racks or less.

j. A minimum of every other rack or cabinet shall be outfitted with a properly installed and bonded ESD (electro-static discharge) port along with a wrist strap and lead to be used by any technicians servicing network equipment. On four post racks and cabinets these ESC ports and straps shall be provided on front and back to be accessible and able to reach any active equipment needing servicing.

k. Armored cables shall be properly bonded to the earthing system on both ends with a kit built to that purpose.

l. For an example of telecom room grounding, refer to the illustration that follows:

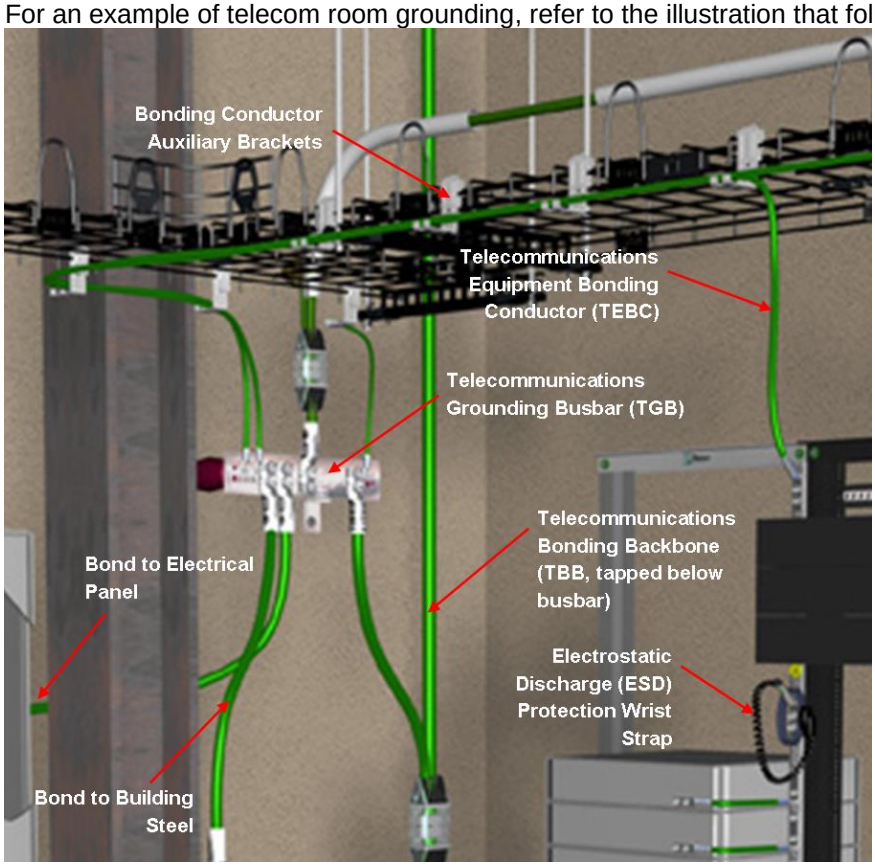

m. For an example of proper rack grounding, see the illustration below:

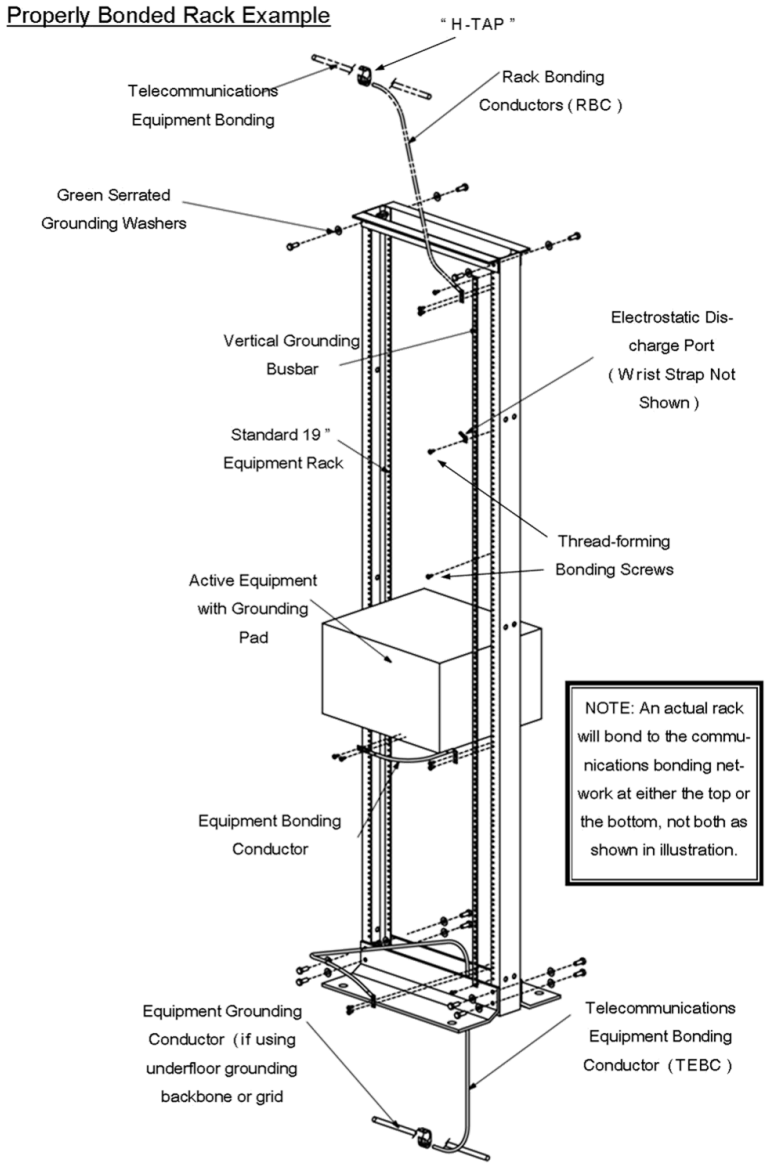

n. For an example of proper cabinet grounding, see the illustration below:

Properly Bonded Standard Equipment Cabinet

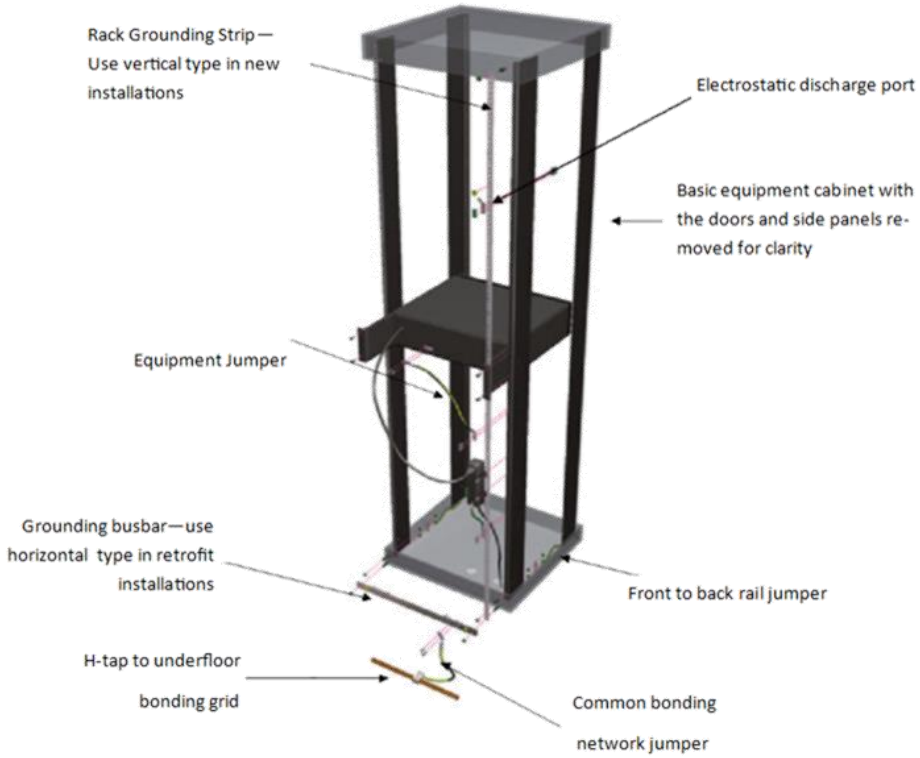

7. Rack/Cabinet Grounding Hardware – RBC (Rack Bonding Conductor)

   a. Rack bonding conductors for telecommunications shall have the following properties:

      - See Appendix A for suggested parts

8. Rack/Cabinet Grounding Hardware – Electrostatic Discharge Kit

   a. Rack electrostatic discharge kits shall have the following properties:

      - See Appendix A for suggested parts.

9. Rack/Cabinet Grounding Hardware – ESD Wrist Strap for ESD Kit

   a. ESD wrist strap for ESD kit shall have the following properties:

      - See Appendix A for suggested parts.

10. Rack/Cabinet Grounding Hardware – Green Bonding Screws

a. Green bonding screws shall have the following properties:

- See Appendix A for suggested parts.

11. Rack/Cabinet Grounding Hardware – Thread Forming Screws

a. Thread forming screws shall have the following properties:

- See Appendix A for suggested parts.

12. Rack/Cabinet Grounding Hardware – Unit Bonding Conductor (UBC)

a. Unit bonding conductors shall have the following properties:

- See Appendix A for suggested parts.

13. Grounding Busbars – Primary Bonding Busbar (PBB)

a. Primary bonding busbar shall have the following properties:

- [See Appendix A for suggested parts.

14. Grounding Busbars – Rack Bonding Busbar (RBB)

a. Rack bonding busbar shall have the following properties:

- See Appendix A for suggested parts.

E. Cable Pathways

1. See Appendix A for Part Numbers

2. Installation Guidelines

a. Installation of cable pathways shall be compliant with most recent versions of all applicable standards, national and local codes, as well as the local Authority Having Jurisdiction (AHJ).

b. Anywhere there is a conflict between standards, codes, installation specifications or project specific documentation contractor shall default to the most stringent.

c. If further clarification is needed, the contractor shall submit a written request for clarification to The Hospital for Sick Kids. Response from The Hospital for Sick Kids shall be in writing.

3. Wyr-Grid

a. Metallic pathway shall have the following attributes:

- See Appendix A for suggested parts and Application guides.

4. FiberRunner

a. Plastic Fiber Duct shall have the following attributes:

- See Appendix A for suggested parts and Application guides.

5. J-Hooks

a. J-Pro system shall have the following attributes:

- The J-Pro™ Cable Support System is designed to provide a competitive alternative to metal J hooks for routing cables throughout the physical infrastructure.
- This system provides complete bend radius control and includes many easy to use mounting options to provide the lowest installed cost.
- The selection of multiple sizes, colors, and pre-riveted J hook assemblies meet the requirements of a wide variety of applications and are suitable for use in air handling spaces.

F. Network Infrastructure Labeling

1. See Appendix A for Part Numbers

2. Installation Guidelines

a. Contractor is responsible to coordinate the labeling scheme required for each project at The Hospital for Sick Kids IT department. Currently each building has its own specific labeling scheme. See locations below to comply with Building and SickKids IT.

i. 555 University Ave. Main Hospital

ii. 525 University Ave. (Lease office space)

iii. PGCRL Building (Research Tower)

iv. PSC Building (Patient Support Center)

b. All newly installed cable and associated apparatus shall be labeled according to the guidelines in ANSI/TIA 606-C or the most recent version of the standard.

c. All newly installed cables shall be labeled within 3 inches at both ends using permanent self-laminating cable labels built to that purpose and designed to outlast the cable to which they attach.

d. The end of each cable shall have the same label.

e. Labels shall be legible and placed in a position that insures ease of visibility.

f. The contractor shall, wherever possible, pre-print labels using Panduit Easy-Mark software and a desktop printer.

g. The Panduit MP300 hand-held thermal transfer printer shall be used onsite to print labels that were unanticipated, or that become damaged in application.

h. The contractor is responsible for ordering the correct self-laminating cable labels appropriate to the cable outer diameter.

i. The same identifier shall be contained in one line and repeated to be visible from all sides without having to rotate the cable to read it.

j. All labels shall be machine printed, bold font and centered at the highest point that can fit all characters legibly. Handwritten labels will not be accepted and shall be remedied at Contractor's expense.

k. This labeling strategy shall, at a minimum, clearly identify all components of the system: racks, cables, panels and outlets, grounding, pathways and spaces like telecommunications rooms per the requirements in the cited standards.

l. Racks and patch panels shall be labeled to identify the location within the cable system infrastructure.

m. All test documents shall accurately reflect the labeling scheme.

n. Outlet, patch panel, and wiring block labels shall be installed on, or in, the space provided on the device.

o. Machine-generated labels shall be installed behind the clear lens or cover on any device that provides such an option.

p. All labels will be permanently affixed to installed cables, patch panels, racks, cabinets, and enclosures.

q. Conduit shall be marked indicating the identification of the cable within.

r. Consult project specific documentation for the labeling scheme for a project.

3. For labeling type see appendix A for specific parts.

G. Cabling Accessories

1. Refer to Appendix A for Part Numbers

2. Plastic Cable Ties

3. Plastic Cable Ties – Plenum

4. Hook and Loop Ties

5. Hook and Loop Ties - Plenum

6. Physical Security Devices

   a. Some portions of The Hospital for Sick Kids networks require additional physical security devices. These take three forms:

      - Devices that block-out copper and fiber ports in patch fields and faceplates that require a special tool for removal.

- Devices that lock-in copper patch cords and require a special tool for removal of those patch cords.
- Devices that temporarily or permanently block USB ports on laptops and computers.

<END OF SECTION>

III. Testing and Acceptance

A. General

1. All cables and termination hardware shall be 100% tested for defects in installation and to verify cabling system performance under installed conditions.

2. All copper pairs or optical fibers of each installed cable shall be tested and verified prior to system acceptance.

3. Any defect in the cabling system performance or installation including but not limited to cable, connectors, feed through couplers, patch panels, and connector blocks shall be repaired or replaced in order to ensure 100% useable conductors or fibers in all cables installed.

4. All cables shall be tested in accordance with this document, the ANSI/TIA Standards, the Panduit warranty guidelines, and industry best practice. If any of these are in conflict, the Contractor shall bring any discrepancies to the attention of the project team for clarification and resolution.

B. Copper Channel Testing

1. All twisted-pair copper cable links shall be tested for compliance to the requirements in ANSI/TIA for the appropriate Category of cabling installed using a test unit meeting a minimum IEC IIIe level of accuracy.

2. All testers used must have been factory calibrated by the manufacturer within one year of use or according to factory calibration recommendations, whichever is more stringent.

3. The contractor shall set references according to manufacturer's recommendation prior to each day's testing and reset references anytime the tester unit shuts down due to inactivity.

4. Resetting references shall also be done whenever test results become sporadic or the tester demonstrates a consistent deterioration of test measurement performance.

5. Testing of any links that include field-terminated plugs shall follow the procedure outlined in Panduit document #PN614, available from the Panduit representative, or downloadable from www.panduit.com.

C. Fiber Testing

1. All installed fiber shall be tested for link-loss in accordance with ANSI/TIA standards cited in this document.

2. For horizontal cabling system using multimode optical fiber, attenuation l should be measured in at least one direction, according to customer requirements, at either 850 nm (nanometer) or 1300 nm using an appropriate light source and power meter.

3. Fiber testing must be performed using reference grade test leads. Test results from tests using test leads that are not reference grade will not be accepted and must be retested at the Contractor's expense.

4. Backbone multimode fiber cabling should be tested at both 850 nm and 1300 nm (or 1310 and 1550 nm for singlemode) in both directions.

5. Test set-up and performance shall be conducted in accordance the Method B (One Jumper Method).

6. Where links are combined to complete a circuit between devices, the Contractor shall test each link from end to end to ensure the performance of the system. Only basic link loss testing (OLTS) is required, not OTDR testing. OTDR testing is optional as a secondary test method but, by itself, is not a valid means by which links or channels can be certified.

7. The contractor can optionally install Panduit patch cords to complete the circuit and then test the entire channel, though Panduit currently issues only a link warranty, not a channel warranty. The test method shall be the same used for the test described above.

8. Attenuation testing shall be performed with a stable launch condition using two-meter jumpers to attach the test equipment to the cable plant. The light source shall be left in place after calibration and the power meter moved to the far end to take measurements.

9. Qualification of the reference cords shall be completed after each reference and the insertion loss of the reference connectors shall be saved and presented as part of the testing documentation.

10. Panduit highly recommends utilizing the practice of individual end face inspection, cleaning if necessary then re-inspection before connecting any fiber end faces together in a link. This complete process should be performed BEFORE any OLTS testing takes place. For further process clarification, refer to Panduit Visual Inspection and Cleaning Best Practices #FS061.

11. Contractor shall further inspect, clean and re-inspect the Reference Lead connector end faces anytime testing shows inconsistent results. If this does not correct accuracy, contractor shall re-certify (test) the reference leads and replace them if necessary.

D. System Documentation

1. Documentation During Installation Phases

    a. The Hospital for Sick Kids will provide floor plans in paper and electronic (DWG, AutoCAD) formats on which as-built construction information can be added. These documents will be modified accordingly by the telecommunications contractor to denote as-built information and returned to The Hospital for Sick Kids.

    b. Documentation shall be submitted within ten (10) working days of the completion of each testing phase. This is inclusive of all test results and draft as-built drawings. The Contractor shall annotate the base drawings and return a hard copy (same plot size as originals) and electronic (AutoCAD) form.

    c. When repairs and re-tests are performed, the problem found and corrective action taken shall be noted, and both the failed and passed test data shall be documented.

d. It is mandatory that the test results from each phase be delivered in the tester native format. At the request of the Hospital for Sick Kids project lead, the telecommunications contractor shall provide copies of the original test results.

e. The As-Built drawings are to include cable routes and outlet locations. Their sequential number as defined elsewhere in this document shall identify outlet locations. Numbering, icons, and drawing conventions used shall be consistent throughout all documentation provided.

2. Documentation at Project Completion

a. A final, complete set of all documentation shall be provided in electronic format within three weeks after the completion of the project.

b. The testing results shall also be provided to Panduit in raw data format (native tester format), along with all associated warranty paperwork for evaluation and issuance of warranty.

c. All documentation shall be clearly marked with the words “Project Test Documentation” plus the project name, and the date of completion.

d. The test documentation shall detail the test methods used and the specific settings of the equipment during the test as well as the software version being used in the field test equipment.

e. The test results shall further include a record of test frequencies, cable type, conductor pair and cable (or outlet) I.D., measurement direction, reference setup, and crew member name(s).

f. The test equipment name, manufacturer, model number, serial number, software version and last calibration date will also be provided at the end of the document.

3. Unless the manufacturer specifies a more frequent calibration cycle, an annual factory calibration is mandatory on all test equipment used for the installation.

4. The project lead from The Hospital for Sick Kids may request that a 10% random field re-test be conducted on the cable system, at no additional cost, to verify documented findings. Tests shall be a repeat of those defined above.

5. If retest findings contradict the documentation submitted by the telecommunications contractor, additional testing can be requested to the extent determined necessary by the Project Lead, including a 100% re-test. This re-test shall be at no additional cost to The Hospital for Sick Kids.

E. Inspection and Acceptance

1. During Installation

a. The Hospital for Sick Kids Project Lead will make periodic inspection of the project in progress.

b. One inspection will be performed at the conclusion of cable pulling, prior to closing of the drop ceiling, to inspect the method of cable routing and support, and the firestopping of penetrations.

c. A second inspection will be performed at completion of cable termination to validate that cables were dressed and terminated in accordance with ANSI/TIA recommendations for jacket removal and pair untwist, compliance with Manufacturer's minimum bend radius, and that cable ends are dressed neatly and orderly.

2. Final Inspection

   a. Upon completion of the project, The Hospital for Sick Kids Project Lead will perform a final inspection of the installed cabling system with the Contractor's project foreman.

   b. The final inspection will be performed to validate that all horizontal and backbone cables were installed as defined in the drawing package, and that the installation meets the technical performance and aesthetic expectations of The Hospital for Sick Kids.

3. Live System Performance Verification

   a. During the three-week period between final inspection and delivery of the test and as-built documentation, The Hospital for Sick Kids will activate and validate operation of the cabling system.

4. Final Acceptance

   a. Final acceptance is possible after completion of the installation, in-progress and final inspections, receipt of the test results, receipt of the as-built documentation, and receipt of the manufacturer's system performance warranty and successful performance of the system for a three-week period.

   b. Acceptance of the installed system by The Hospital for Sick Kids must be in writing to be valid

F. Post Installation Maintenance Agreement

1. The Contractor shall furnish an hourly rate with the proposal submittal which shall be valid for a period of one year from the date of acceptance.

2. This rate will be used when cabling support is required to do moves, adds, and changes (MACs) to the system.

3. MACs shall not void the Contractor's nor Manufacturer's warranty.

IV. Sick Kids Special requirements

A. Additional and project specific requirements

1. TBD

    a. TBD

2. TBD

    a. TBD

B. Sick Kids Scope of Work Green Filed & Brown Field

1. Green Field

    a. TBD

        i. TBD

        ii. TBD

2. Brown Field

    a. TBD

        i.

<END OF SECTION>

V. Appendix A – Materials List

Product Category	Part Number	Manufacturer	Part Description
Copper Cabling Products			
Cat 6A			
	PUP6AHD04BU-G	Panduit	Copper Cable, Cat 6A, Vari-MaTriX, 4-Pair, 23 AWG, UTP, CMP, Blue, 1000ft/305m
	CPP48WBLY	Panduit	Mini Com 48-port modular patch panel with faceplates in black, (2RU).
	CPP24WBLY	Panduit	Mini Com 24-port modular patch panel with faceplates in black, (1RU).
	CFG2WH	Panduit	Mini Com rectangular adapter, mounts behind standard GFCI faceplates, accepts two Mini-Com® Module, White.
	CFG4WH	Panduit	Mini Com rectangular adapter, mounts behind standard GFCI faceplates, accepts four Mini-Com® Module, White.
	CBX1WH-A	Panduit	Mini-Com® surface mount box accepts one Mini-Com® Module. Supplied with adhesive backing. White.
	CBXQ2WH-A	Panduit	Mini-Com® surface mount box accepts two Mini-Com® modules. Includes quick release cover. Supplied with cable ties, adhesive backing, label and label cover. White.
	CJ6X88TGYL	Panduit	Category 6A, RJ45, 10 Gb/s, 8-position, 8-wire universal module, Yellow for WAP
	CBX1WH-A	Panduit	Mini-Com® surface mount box accepts one Mini-Com® Module. Supplied with adhesive backing. White.
	UTP28X1VL	Panduit	Category 6A Performance, 28AWG, UTP Patch Cord, CM/LSZH, Violet, 1ft. (TR room or WAP end)
	UTP28X7VL	Panduit	Category 6A Performance, 28AWG, UTP Patch Cord, CM/LSZH, Violet. 7ft. (TR room for WAP end)
	CJ6X88TGBU	Panduit	Category 6A, RJ45, 10 Gb/s, 8-position, 8-wire universal module, Blue for data.
	UTP28X7BU	Panduit	Category 6A Performance, 28AWG, UTP Patch Cord, CM/LSZH, Blue. (TR room Blue for data)

Product Category	Part Number	Manufacturer	Part Description
	UTP28X10BU	Panduit	Category 6A Performance, 28AWG, UTP Patch Cord, CM/LSZH, Blue. (Work area Blue for data)
Fiber Cabling Products			
	FSPP912Y	Panduit	9um OS2 12 Fiber Indoor Armored Cable, Plenum (OFCP), 900um Buffered Fibers. (armored cable when no conduit is present or supplied)
	FSPP924Y	Panduit	9um OS2 24 Fiber Indoor Armored Cable, Plenum (OFCP), 900um Buffered Fibers. (armored cable when no conduit is present or supplied)
	FSDP912Y	Panduit	9um OS2 12 Fiber Indoor Distribution Cable, Plenum (OFNP), 900um Buffered Fibers. (Indoor Tight Buffer with Conduit is present)
	FRE1UBL	Panduit	The Panduit® Opticom® Rack Mount Enclosure ensures network reliability by housing, organizing, managing and protecting up to 96 fiber optic cable terminations, splices, connectors and patch cords. The FRE1U is black, made of steel and features 4 FAP/cassette slots. It can accommodate 4 FAP adapter panels, 4 Opticom cassettes, 8 HD Flex cassettes or FOSM splice modules in a 1 RU footprint. Fibers are easily accessible through front and rear pullout drawers. 1.72"H x 17.60"W x 15.59"D (43.6mm x 447.0mm x 396.0mm)
	FRE2UBL	Panduit	The Panduit® Opticom® Rack Mount Enclosure ensures network reliability by housing, organizing, managing and protecting up to 192 fiber optic cable terminations, splices, connectors and patch cords. The FRE2U is black, made of steel and features 8 FAP/cassette slots. It can accommodate 8 FAP adapter panels, 8 Opticom cassettes, 16 HD Flex cassettes or FOSM splice modules in a 2 RU footprint. Fibers are easily accessible through front and rear pullout drawers. 3.46"H x 18.98"W x 15.63"D (88.0mm x 482.0mm x 397.0mm)

Product Category	Part Number	Manufacturer	Part Description
	FRE4UBL	Panduit	The Panduit® Opticom® Rack Mount Enclosure ensures network reliability by housing, organizing, managing and protecting up to 384 fiber optic cable terminations, splices, connectors and patch cords. The FRE4UBL is black, made of steel and uses up to 16 FAP adapter panels, 16 Opticom cassettes, 32 HD Flex cassettes or FOSM splice modules in a 4 RU footprint. Fibers are easily accessible through front pullout drawer and a removable back cover. 6.97"H x 19"W x 15.63"D (177.0mm x 482.0mm x 397.0mm)
	FLCSSCBUY	Panduit	The LC OptiCam® singlemode simplex fiber optic connector in blue is designed for 900 micron tight-buffered fiber installations. It is intended for use in fixed installations that are outside the scope of the RoHS directive.
	F92ERLNLNSNM002	Panduit	OS2 2 fiber, 900m buffered, Duplex patch cord, with no jacket, LC to LC, Std IL
Racks, Cabinets, and Cable Management			
	R4P	Panduit	The Panduit Four-post Rack System provides a reliable foundation for mounting telecommunication and data center equipment. The modular rack can be used to manage high performance copper and fiber patch cables using Panduit horizontal and vertical cable managers and accessories, such as power outlet unit brackets. Aluminum, 45 RU, #12-24 Threaded Mounting Holes, Black, 1pc + hardware kit and paint piercing bonding kit.
	R2P	Panduit	The Panduit Two-post Rack System provides a reliable foundation for mounting telecommunication and data center equipment. The modular rack can be used to manage high performance copper and fiber patch cables using Panduit horizontal and vertical cable managers and accessories, such as power outlet unit brackets. Aluminum, 45 RU, #12-24 Threaded Mounting Holes, Black, 1pc + hardware kit and paint piercing bonding kit.

Product Category	Part Number	Manufacturer	Part Description
	PR2VFD06	Panduit	The Panduit® Patchrunner® 2 Vertical Cable Manager combines high-density capability and versatility, freeing up valuable floor space. The fully pre-assembled manager lowers overall costs and sets the standard for the entire cable management industry. Single-sided, Steel, 45RU, Black, 1pc, Includes one full-length metal, dual-hinging, push-to-close door.
	PR2VFD08	Panduit	The Panduit® Patchrunner® 2 Vertical Cable Manager combines high-density capability and versatility, freeing up valuable floor space. The fully pre-assembled manager lowers overall costs and sets the standard for the entire cable management industry. Single-sided, Steel, 45RU, Black, 1pc, Includes one full-length metal, dual-hinging, push-to-close door.
	PR2VFD12	Panduit	The Panduit® Patchrunner® 2 Vertical Cable Manager combines high-density capability and versatility, freeing up valuable floor space. The fully pre-assembled manager lowers overall costs and sets the standard for the entire cable management industry. Single-sided, Steel, 45RU, Black, 1pc, Includes one full-length metal, dual-hinging, push-to-close door.
	NMF2	Panduit	The Panduit® NetManager® High Capacity Horizontal Cable Manager cost-effectively organizes and protects copper and fiber network cabling in any standard EIA 19in (483mm) rack or cabinet. Large front finger openings easily accommodate Category 6 and 10G cables, reducing installation time and maintenance costs. Hinged front cover only, ABS Plastic, 2RU, Black, 1pc.
Bonding and Grounding			
	RGRB19Y	Panduit	Busbar for threaded rail racks and cabinets; provided with thread-forming screws.
	RGEJ657PF	Panduit	Equipment jumper kit (also known as a Unit Bonding Conductor); 57" (1.4M); #6 AWG (16mm2) jumper; pre-terminated on one end.
	RGTBSG-C	Panduit	Bonding screw for threaded rail racks.
	HTCT250-2-1	Panduit	HTAP for bonding 1/0 TGB conductor to #6 AWG – #2 AWG SBG.

Product Category	Part Number	Manufacturer	Part Description
	RGCBNJ660P22	Panduit	RBC; 60" (1.5M); #6 AWG (16mm2) jumper; provided with HTAP connector for #6 AWG – #2 AWG (16mm2 – 25mm2) SBG.
	RGESDWS	Panduit	Wrist strap with 6' (2M) coil cord.
Cable Pathways			
	Panduit Wire Basket	Panduit	The Wire Basket Overhead Cable Tray Routing System shall consist of pathway sections, splice connectors, sidewalls, waterfalls, mounting brackets, and accessories designed to route and manage copper, fiber optic, or power cables. The pathway sections shall be provided in various widths: 4", 6", 8", 12", 18", 24". The baskets are 118.33 inches long and are available in 2", 4", or 6" sidewall heights. Trapeze, cantilever, and wall mount brackets are available to support the system. Baskets, accessories, and components are available in black, electro zinc, and white.
	FiberRunner	Panduit	The FiberRunner routing system shall be a system of channel, fittings, and brackets designed to segregate, route, and protect fiber optic and high-performance copper cabling. Channel and fittings shall be assembled using pre-assembled couplers. A selection of spill out options shall be available that easily attaches using the vertical tee. Fittings maintain a minimum 2" bend radius to protect against signal loss due to excessive cable bends. Available system colors shall be yellow, orange, and black. A full complement of brackets shall be available for attaching system components to ladder rack, threaded rod, auxiliary framing, strut, equipment racks, cabinets, and raised floor pedestals.
J Hooks – Ceiling Mount	JP131CMB-L20	Panduit	J-PRO Cable support system, with ceiling mount bracket that has one 3/16 (M5), 1/4 (M6), and 3/8 (M10) mounting hole, 1.31 (33.3mm) max. bundle capacity, nylon 6.6 with metal attachments, black, 50 pc. package quantity.
	JP2CMB-L20	Panduit	J-PRO Cable support system, with ceiling mount bracket that has one 3/16 (M5), 1/4 (M6), and 3/8 (M10) mounting hole, 2.00 (50.8mm) max. bundle capacity, nylon 6.6 with metal attachments, black, 50 pc. package quantity.

Product Category	Part Number	Manufacturer	Part Description
	JP4CMB-X20	Panduit	J-PRO Cable support system, with ceiling mount bracket that has one 3/16 (M5), 1/4 (M6), and 3/8 (M10) mounting hole, 4.00 (101.6mm) max. bundle capacity, nylon 6.6 with metal attachments, black, 10 pc. package quantity.
J Hooks – Wall Mount			
	JP131WP2B-L20		J-PRO Cable support system, for powder actuated installation on walls, one 5/32 (M4) mounting hole for user supplied fasteners, 1.31 (33.3 mm) max. bundle capacity, nylon 6.6 with metal attachments, black, 50 pc. package quantity.
	JP2WP2B-L20		J-PRO Cable support system, for powder actuated installation on walls, one 5/32 (M4) mounting hole for user supplied fasteners, 2.00 (50.8mm) max. bundle capacity, nylon 6.6 with metal attachments, black, 50 pc. package quantity.
	JP4WP2B-X20		J-PRO Cable support system, for powder actuated installation on walls, one 5/32 (M4) mounting hole for user supplied fasteners, 4.00 (101.6mm) max. bundle capacity, nylon 6.6 with metal attachments, black, 10 pc. package quantity.
Network Labeling			
	S100X150YAJ	Panduit	Laser/ink jet self-laminating label, 1" W x 1.50" L, Cat. 5e/Cat. 6 UTP/Cat. 6e UTP/Cat. 5e FTP/10 – 6 AWG, white print-on area, polyester, 7 labels/row, 42 labels/sheet, 2500 pc. package quantity. (cable wrap around labels for CAT 6 & CAT 6A laser jet labels)
	C252X030FJJ	Panduit	Laser/ink jet network label, 2.52" W x 0.30" H, 4-port identifier, adhesive polyolefin, white, 3 labels/row, 75 labels/sheet, 1000 labels per package. (Modular patch panel labels laser jet labels)

Product Category	Part Number	Manufacturer	Part Description
	C252X030FJC	Panduit	Network label, P1 cassette, 2.52" W x 0.30" H, polyolefin, white, 125 labels/cassette, 1 pc. package quantity. (Modular Patch Panel LS8 Labels)
	C061X030FJJ	Panduit	Laser/ink jet network label, 0.61" W x 0.30" H, 1-port identifier, adhesive polyolefin, white, 13 label/row, 325 labels/sheet, 5000 labels per package. (2 ports Decora plate laser jet labels)
	C061X030FJC	Panduit	Laser/ink jet network label, 1.25" W x 0.30" H, 2-port identifier, adhesive polyolefin, white, 6 labels/row, 150 labels/sheet, 2500 labels per package. (2 ports Decora plate LS8 Labels)
	C125X030FJJ	Panduit	Laser/ink jet network label, 1.25" W x 0.30" H, 2-port identifier, adhesive polyolefin, white, 6 labels/row, 150 labels/sheet, 2500 labels per package. (4 & 6 ports Decora plate laser jet labels)
	C125X030FJC	Panduit	Network label, P1 cassette, 1.25" W x 0.30" H, polyolefin, white, 200 labels/cassette, 1 pc. Package quantity. (4 & 6 ports Decora plate LS8 labels)
	C061X030FJJ	Panduit	Laser/ink jet network label, 0.61" W x 0.30" H, 1-port identifier, adhesive polyolefin, white, 13 label/row, 325 labels/sheet, 5000 labels per package. (1 port surface box laser jet labels)
	C061X030FJC	Panduit	(Network label, P1 cassette, 0.61" W x 0.30" H, polyolefin, white, 500 labels/cassette, 1 pc. Package quantity. 1 port surface box LS8 labels)
	C125X030FJJ	Panduit	Laser/ink jet network label, 1.25" W x 0.30" H, 2-port identifier, adhesive polyolefin, white, 6 labels/row, 150 labels/sheet, 2500 labels per package. (2 ports surface box laser jet labels)
	C125X030FJC	Panduit	Network label, P1 cassette, 1.25" W x 0.30" H, polyolefin, white, 200 labels/cassette, 1 pc. package quantity. (2 ports surface box LS8 labels)
Other Cabling Accessories			
	TBD		
	TBD		

<END OF APPENDIX A>

<END OF DOCUMENT>

REV	DATE	MODIFICATIONS
A	15/NOV/2024	FINAL (DC-453883)

Hospital for Sick Children
Toronto, ON
Canada

01 - C1 - Cover Sheet
02 - C2 - Disclaimer - Site Readiness
03 - A1 - General Notes
04 - A2 - Equipment Layout
05 - A3 - Radiation Protection
06 - A4 - Radiation Protection Details
07 - A5 - Equipment Dimensions (1)
08 - A6 - Equipment Dimensions (2)
09 - A6 - Delivery
10 - S1 - Structural Notes
11 - S2 - Structural Layout
12 - S3 - Structural Details (1)
13 - M1 - HVAC
14 - E1 - Electrical Notes
15 - E2 - Electrical Layout
16 - E3 - Electrical Elevations
17 - E4 - Power Requirements
18 - E5 - Details - Interconnections

A mandatory component of this drawing set is the GE HealthCare Pre Installation manual. Failure to reference the Pre Installation manual will result in incomplete documentation required for site design and preparation.
Pre Installation documents for GE HealthCare products can be accessed on the web at: *https://www.gehealthcare.com/support/manuals*

GE HealthCare does not take responsibility for any damages resulting from changes on drawings made by others. Errors may occur by not referring to the complete set of final issue drawings. GE HealthCare cannot accept responsibility for any damage due to the partial use of GE HealthCare final issue drawings, however caused. All dimensions are in millimeters unless otherwise specified. Do not scale from printed pdf files. GE HealthCare accepts no responsibility or liability for defective work due to scaling from these drawings.

GE HealthCare

Fabio Arminio
647-308-5834
Fabio.arminio@gehealthcare.com

STARGUIDE
FINAL STUDY

Drawn by	Verified by	Concession	GON/Quote	PIM Manual	Rev
DJC	CPC	-	5419843	5845893-1EN	3

Format	Scale	File Name	Date	Sheet
A3	1/4"=1'-0"	CT-M394026-FIN-00-A.DWG	15/NOV/2024	01/18

DISCLAIMER

GENERAL SPECIFICATIONS

- GE is not responsible for the installation of developers and associated equipment, lighting, cassette trays and protective screens or derivatives not mentioned in the order.
- The final study contains recommendations for the location of GE equipment and associated devices, electrical wiring and room arrangements. When preparing the study, every effort has been made to consider every aspect of the actual equipment expected to be installed.
- The layout of the equipment offered by GE, the dimensions given for the premises, the details provided for the pre-installation work and electrical power supply are given according to the information noted during on-site study and the wishes expressed by the customer.
- The room dimensions used to create the equipment layout may originate from a previous layout and may not be accurate as they may not have been verified on site. GE cannot take any responsibility for errors due to lack of information.
- Dimensions apply to finished surfaces of the room.
- Actual configuration may differ from options presented in some typical views or tables.
- If this set of final drawings has been approved by the customer, any subsequent modification of the site must be subject to further investigation by GE about the feasibility of installing the equipment. Any reservations must be noted.
- The equipment layout indicates the placement and interconnection of the indicated equipment components. There may be local requirements that could impact the placement of these components. It remains the customer's responsibility to ensure that the site and final equipment placement complies with all applicable local requirements.
- All work required to install GE equipment must be carried out in compliance with the building regulations and the safety standards of legal force in the country concerned.
- These drawings are not to be used for actual construction purposes. The company cannot take responsibility for any damage resulting therefrom.

CUSTOMER RESPONSIBILITIES

- It is the responsibility of the customer to prepare the site in accordance with the specifications stated in the final study. A detailed site readiness checklist is provided by GE. It is the responsibility of the customer to ensure all requirements are fulfilled and that the site conforms to all specifications defined in the checklist and final study. The GE Project Manager of Installation (PMI) will work in cooperation with the customer to follow up and ensure that actions in the checklist are complete, and if necessary, will aid in the rescheduling of the delivery and installation date.
- Prior to installation, a structural engineer of record must ensure that the floor and ceiling is designed in such a way that the loads of the installed system can be securely borne and transferred. The layout of additional structural elements, dimensioning and the selection of appropriate installation methods are the sole responsibility of the structural engineer. Execution of load bearing structures supporting equipment on the ceiling, floor or walls are the customer's responsibility.

RADIO-PROTECTION

- Suitable radiological protection must be determined by a qualified radiological physicist in conformation with local regulations. GE does not take responsibility for the specification or provision of radio-protection.

THE UNDERSIGNED, HEREBY CERTIFIES THAT I HAVE READ AND APPROVED THE PLANS IN THIS DOCUMENT.		
DATE	NAME	SIGNATURE

CUSTOMER SITE READINESS REQUIREMENTS

REQUIRED MANUALS FOR SYSTEM PRE-INSTALLATION	
Description	Document Number*
Product specific Pre-installation Manual	Refer to cover page
*documents can be accessed in multiple languages at *https://www.gehealthcare.com/support/manuals*	

- A mandatory component of this drawing set is the GE HealthCare Pre-installation manual. Failure to reference the Pre-installation manual will result in incomplete documentation required for site design and preparation.
- The items on the GE HealthCare Site Readiness Checklist **DOC2949061** and Worksheet **DOC2949068** are REQUIRED to facilitate equipment delivery to the site. Equipment will not be delivered if these requirements are not satisfied.
  - Any deviation from these drawings must be communicated in writing to and reviewed by your local GE HealthCare installation project manager prior to making changes.
  - Make arrangements for any rigging, special handling, or facility modifications that must be made to deliver the equipment to the installation site. If desired, your local GE HealthCare installation project manager can supply a reference list of rigging contractors.
  - New construction requires the following;
    1. Secure area for equipment,
    2. Power for drills and other test equipment,
    3. Restrooms.
  - Provide for refuse removal and disposal (e.g. crates, cartons, packing)
  - It is required to minimize vibrations within the scan room. It is the customer's responsibility to contract a vibration consultant/engineer to implement site design modifications to meet the GE vibration specification. Refer to the system Pre-installation manual for vibration specifications.

ENVIRONMENT

ALTITUDE

- Operating altitude: from -150 m [-492 ft] to 3000 m [9,843 ft].

MAGNETIC FIELD SPECIFICATIONS

- In order to avoid interference on the system, the static field limits from the surrounding environment must be less than 1 Gauss in both the scan and the operator rooms.
- The ambient static magnetic field in the system location must be less than 1 Gauss.
- The ambient AC magnetic fields must be below 0.01 Gauss peak.
- The system must be installed in an x-ray protected room providing an attenuation of at least 12 db for radio disturbances from 30 MHz to 1 GHz.

MAXIMUM GANTRY AUDIBLE NOISE LEVEL

- The system creates acoustic noise. In compliance with IEC 601-1-1 standard the measured noise (at 1 m [3.3 ft] distance away from the system) is less than 70 db. It is recommended that the wall and ceiling surface is of a sound dampening material to avoid noise reverberation and amplification.
- Take into account that the system includes an intercom communication system connecting the Operator room and the Scan room, to enable the operator to give the patient instructions during the examination.

VIBRATION SPECIFICATIONS

- The system components are sensitive to vibration in the frequency range of 0.5 to 20 Hz, depending on the amplitude of the vibration. It is the customer's responsibility to contract a vibration consultant or qualified engineer to verify that these specifications are met and implement an appropriate solution.
- To minimize vibrations, the system must be installed on a solid floor, as far as possible from vibration sources (parking lots, roadways, subways, heliports, trains, hallways, elevators, hospital power plants... etc).

RADIOACTIVE ISOTOPES

USING RADIOACTIVE ISOTOPES

Since the system involves the use of radioactive isotopes, compliance with Nuclear Regulatory Commission regulations, or similar regulatory requirements (depending on the country), must be adhered to and all permissions obtained well in advance. It is recommended that regulatory compliance is arranged early in the site planning process.

It is essential that all preparations are completed so that required source materials can be obtained prior to installation, including calibration sources. Take into consideration that these sources may have fairly long delivery lead times, yet may also have a short half life, so that it may not be advisable to store them over long periods of time.

RADIOACTIVE ISOTOPES FOR SYSTEM CALIBRATION

DESCRIPTION	
Basic calibration	Site has license for Tc^{99m}
	Tc^{99m} will be available during installation
Isotopes to be used at site are available for installation. Note: Specify age and strength	Co^{57} (Line Source)

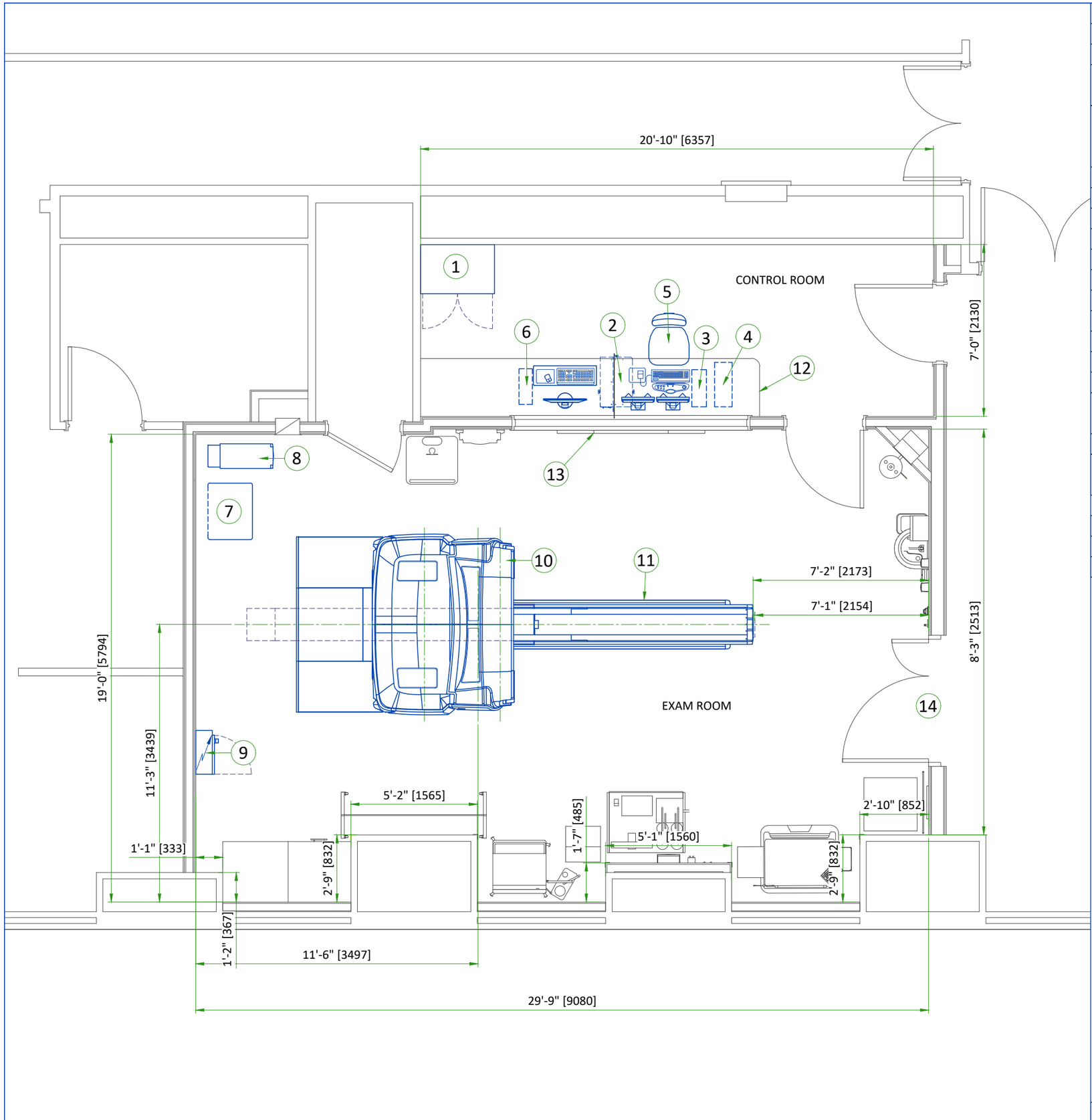

LEGEND

A	GE SUPPLIED	D	AVAILABLE FROM GE
B	GE SUPPLIED/CONTRACTOR INSTALLED	E	EQUIPMENT EXISTING IN ROOM
C	CUSTOMER/CONTRACTOR SUPPLIED AND INSTALLED	*	ITEM TO BE REINSTALLED FROM ANOTHER SITE

BY	ITEM	DESCRIPTION	MAX HEAT OUTPUT (BTU/h)	WEIGHT (lbs)	MAX HEAT OUTPUT (W)	WEIGHT (kg)
A	1	STORAGE CABINET	-	90	-	41
A	2	OPERATOR CONSOLE	3200	144	938	65.1
A	3	NM ACQUISITION STATION	256	25	75	11.3
A	4	IMAGE GENERATOR CONSOLE	512	49	150	22.4
A	5	OPERATOR'S CHAIR	-	-	-	-
A	6	XELERIS V WORKSTATION	273	35	80	16
A	7	POWER DISTRIBUTION UNIT (PDU)	3398	816	996	370
A	8	PARTIAL UPS 14.4 KVA	5122	609	1501.1	276
B	9	MAIN DISCONNECT PANEL (MDP)	-	115	-	52.2
A	10	GANTRY	17138	7144	5023	3240
A	11	PATIENT TABLE	682	1228	200	557
C	12	COUNTER TOP FOR EQUIPMENT- PROVIDE GROMMETED OPENINGS AS REQUIRED TO ROUTE CABLES				
C	13	LEAD GLASS WINDOW				
C	14	MINIMUM OPENING FOR EQUIPMENT DELIVERY IS 1219 mm x 2032 mm [40 in x 80 in] CONTINGENT ON A 2438 mm [96 in] CORRIDOR WIDTH				

EXAM ROOM HEIGHT

FINISHED FLOOR TO SLAB HEIGHT	9'-6"
FALSE CEILING HEIGHT	8'-0"

For Accessory Sales: (866) 281-7545 Options 1, 2, 1, 2 or mail to: gehcaccessorysales@ge.com

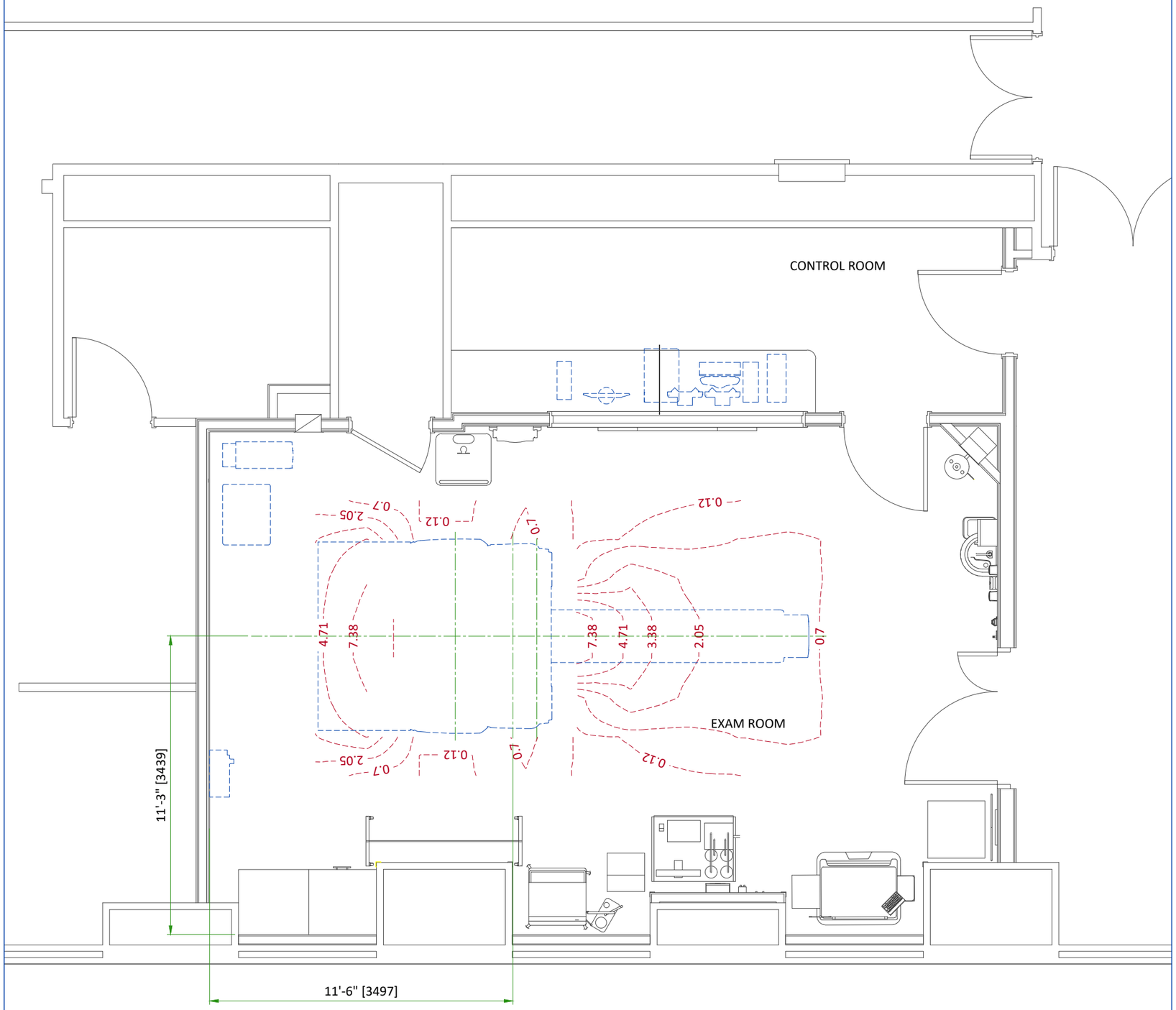

RADIATION PROTECTION LAYOUT

SHIELDING REQUIREMENTS SCALING	
CHANGED PARAMETER (mAs)	MULTIPLICATION FACTOR (new mAs/100)
80 kV	0.21
120 kV	0.71
140 kV	1.00
16x0.625 LD/8x1.25 LD/4x2.5 LD/Fluoro 5 mm	0.59
4x1.25 LD/5 mm (1i)/Fluoro 2.5 mm	0.40
1x1.25 mm images/2x0.625 LD/1x1.25	0.20/0.10
4x3.75 mm images	0.82

SHIELDING REQUIREMENTS:

Radiation shielding regulations differ from one country or state to another. It is the customer's responsibility to ensure that radiation protection and shielding comply with such regulations and requirements during site preparation and system installation and operation.
The system produces x-ray radiation and involves the use and storage of radionuclides. Appropriate barriers such as walls, lead-shielded glass, lead shields, etc. can be installed to protect staff from unnecessary exposure to radiation.
Patients become significant sources of radioactivity; therefore consideration should be given to maximize the distance between the patient and operator during the uptake and acquisition phases of scan procedures.
Scatter-room shielding requirements must be reviewed by a qualified radiological health physicist taking into consideration:

- Scatter radiation levels within the scan room
- Equipment placement
- Weekly projected workloads (#patient/day technique (kvp*ma))
- Materials used for construction of walls, floors, ceiling, doors, and windows
- Access to areas surrounding the Scan Room
- Equipment in areas surrounding the Scan Room (for example: film developer, film storage)

BACKGROUND RADIATION

When the system is calibrated, background radiation from surrounding areas may adversely affect calibration. Therefore all radiation sources must be suitably shielded, including:

- Waiting/Injection areas
- Radionuclide storage and preparation area (sometimes known as "hot lab")

As a general guideline, if the anticipated background radiation in the Scan Room will be higher than 0.1mR/h (1microGy/h), then appropriate additional shielding should be installed.

Shielding of the Scan Room includes walls, lead-shielded glass, lead shields, etc. and must be sufficient to protect staff from unnecessary exposure to radiation. The shielding requirements must be determined by a qualified radiological health physicist, taking into consideration:

- Local regulatory requirements
- Facility policy
- CT scatter radiation levels within the scanning room
- Patient location and level of radiation from patients after intake of radionuclides
- Equipment placement
- Materials used for construction of walls, floors, ceiling, doors, and windows
- Weekly projected work-loads (# patient/day technique (kvp*ma))
- Access to areas surrounding the Scan Room
- Equipment in areas surrounding the Scan Room (for example: film developer, film storage)
- Protection of operator room, included leaded window, walls and door

The mAs, kV and aperture scaling factors shown in the table can be used to adjust exposure levels to the scan technique used at the site.

NOTE: Actual measurements can vary. All measurements have an accuracy of ±20% because of measurement equipment, technique, and system-to-system variation.
The units of measure used for radiation levels have been changed in this document, from mR (millirads) to µGy (micrograys). The conversion factor is : 1 mR = 10 µGy

The illustrations on this page were created using the following technique:
- Body Phantom, 140kV, 100mA, 1 sec, 4x5 mm

RADIATION SCATTER - BODY PHANTOM

NOTE: 140 kV
100 mAs/scan
1 sec
4 x 5mm

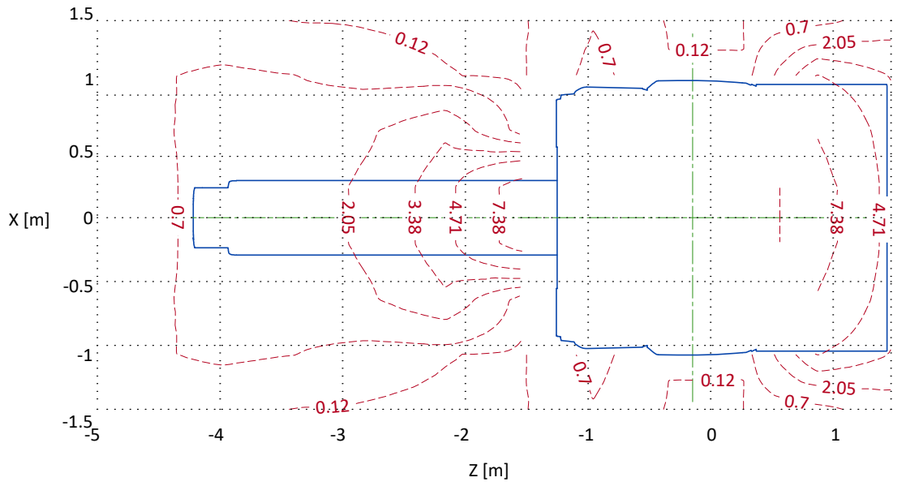

Plan View

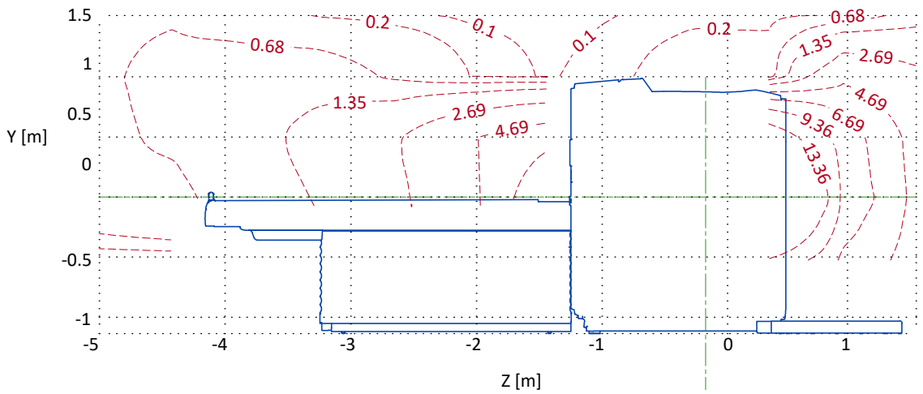

Elevation

DETAIL NOT TO SCALE

RADIATION SCATTER - HEAD PHANTOM

NOTE: 140 kV
100 mAs/scan
1 sec
4 x 5mm

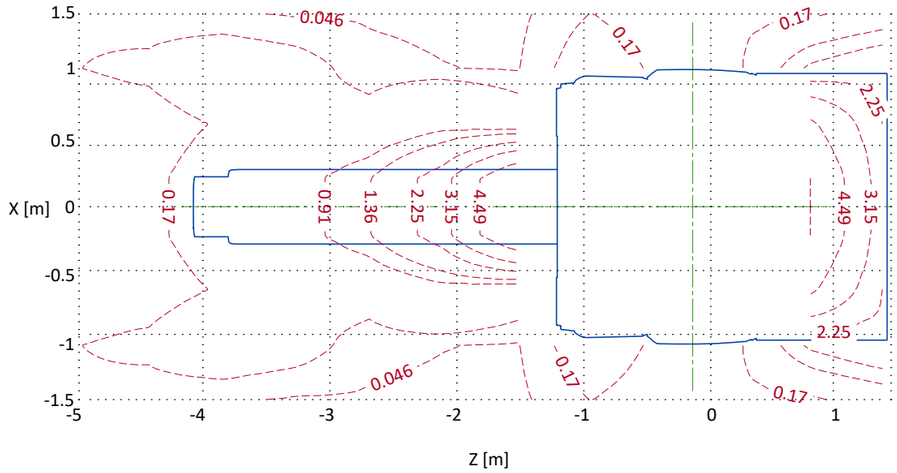

Plan View

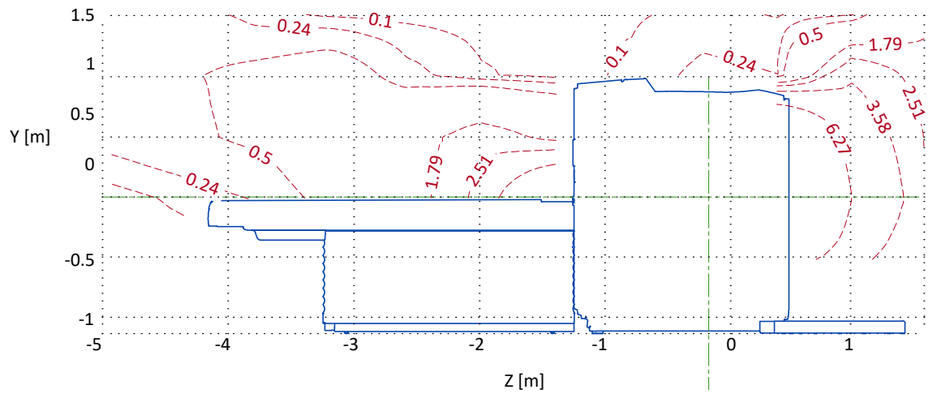

Elevation

DETAIL NOT TO SCALE

GANTRY WITH PATIENT TABLE

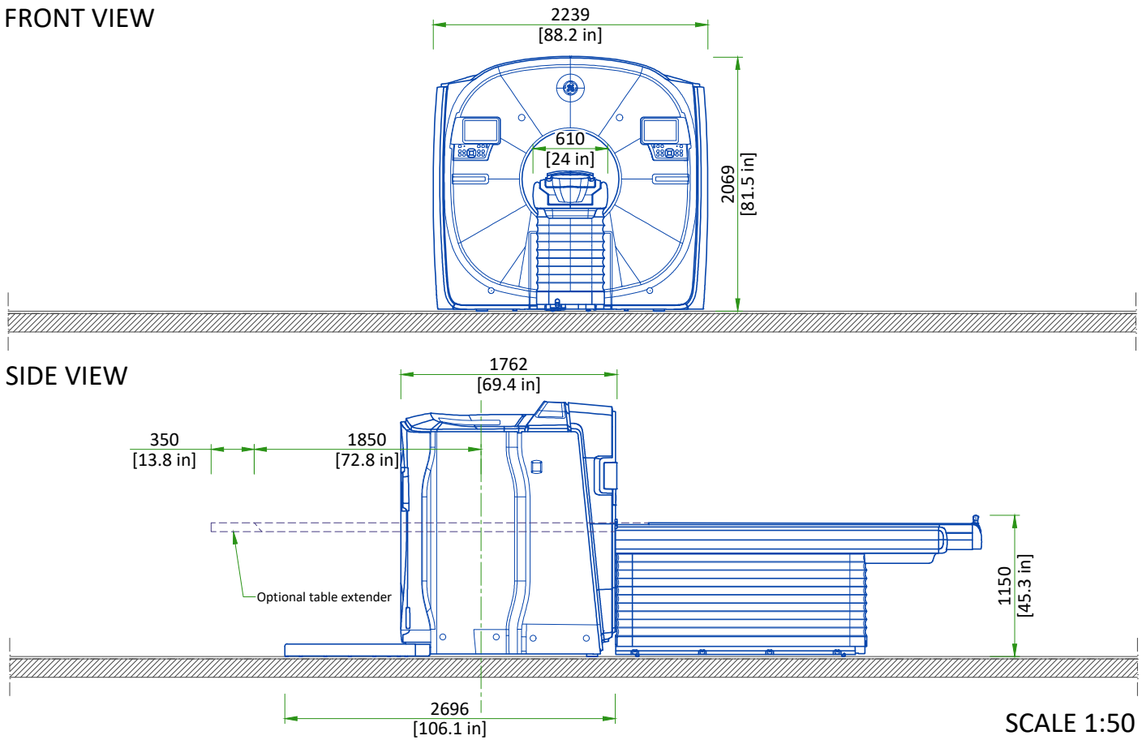

POWER DISTRIBUTION UNIT (PDU)

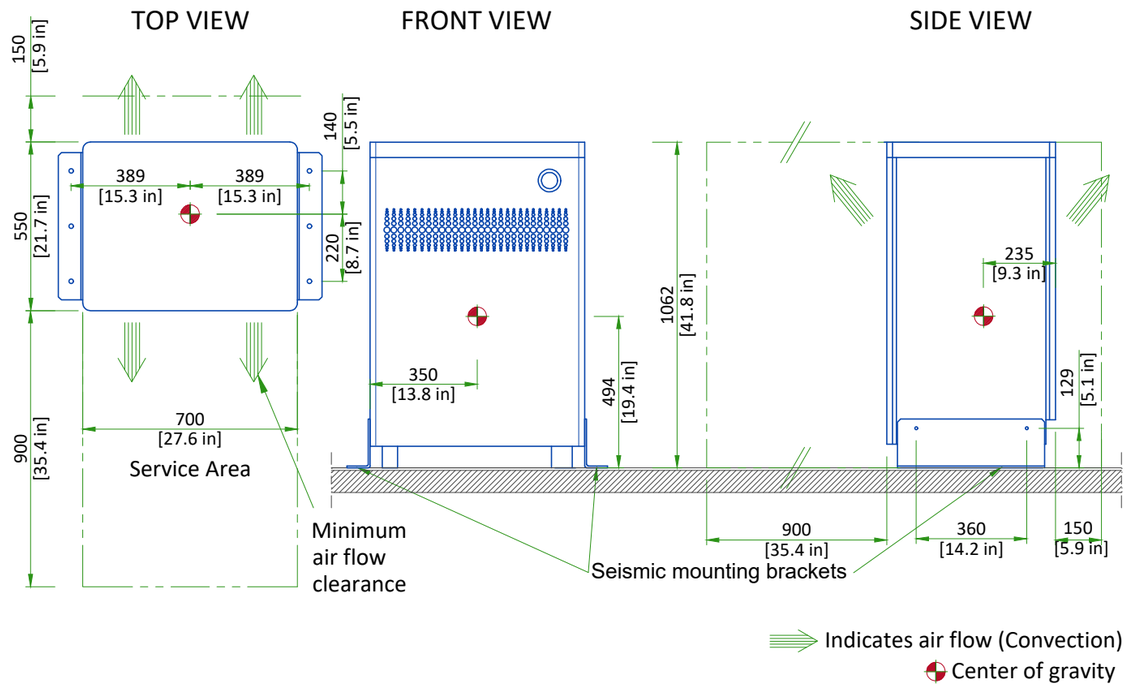

CUSTOMER SUPPLIED TABLE AND CONSOLES

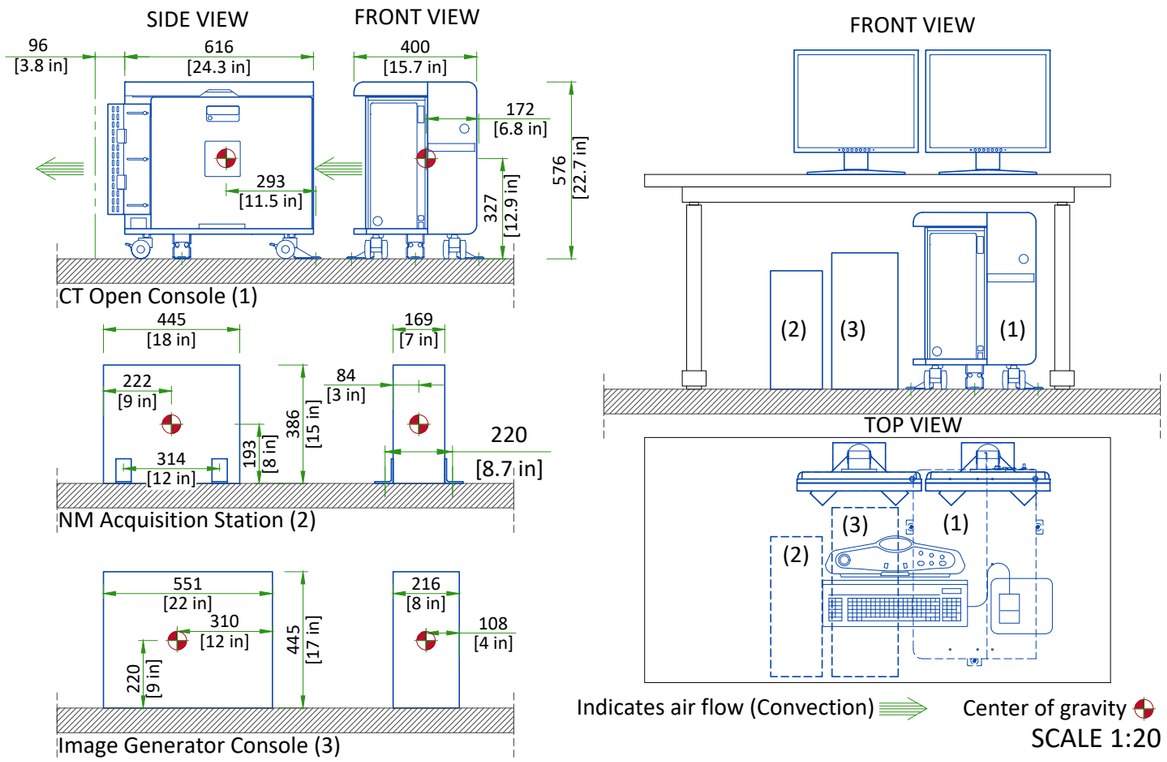

MAIN DISCONNECT PANEL

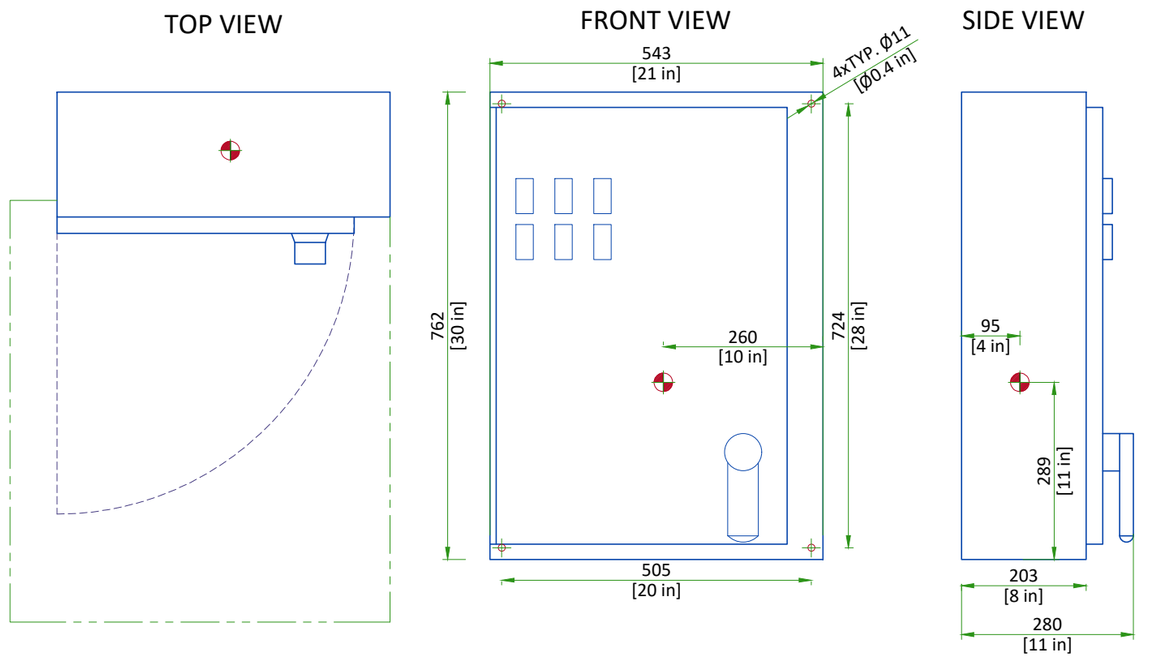

UNINTERRUPTIBLE POWER SUPPLY

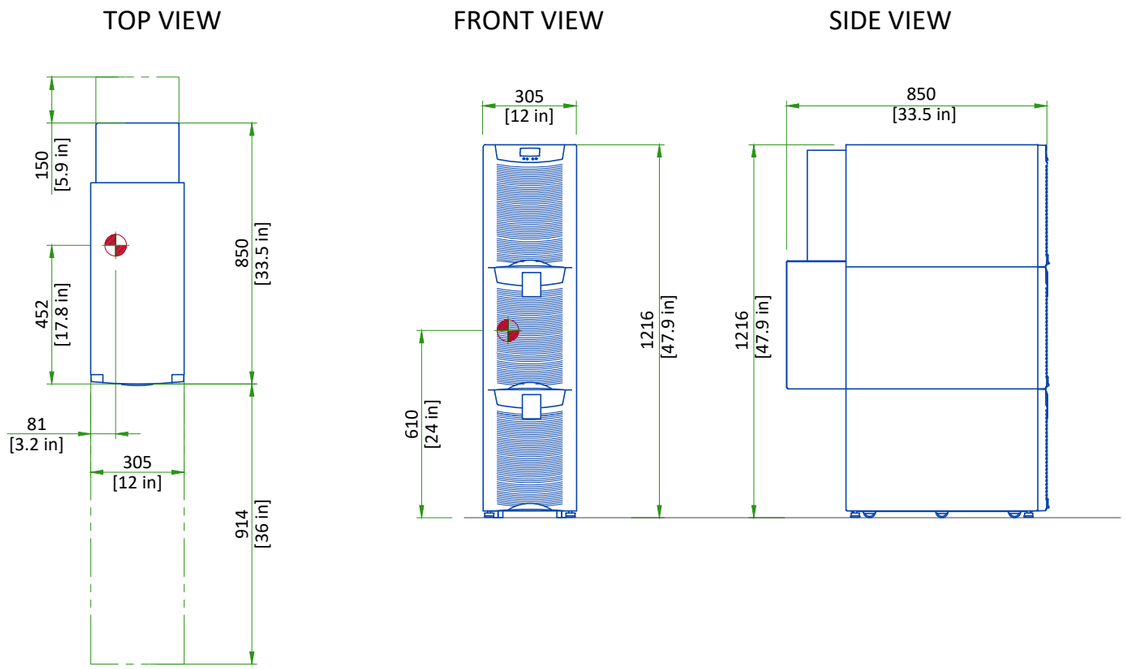

SCALE 1:20

Center of Gravity

DELIVERY DETAILS

THE CUSTOMER/CONTRACTOR SHOULD:

- Provide an area adjacent to the installation site for delivery and unloading of the GE equipment.
- Ensure that the dimensions of all doors, corridors, ceiling heights are sufficient to accommodate the movement of GE equipment from the delivery area into the definitive installation room.
- Ensure that access routes for equipment will accommodate the weights of the equipment and any transportation, lifting and rigging equipment.
- Ensure that all necessary arrangements for stopping and unloading on public or private property not belonging to the customer have been made.

CT GANTRY:

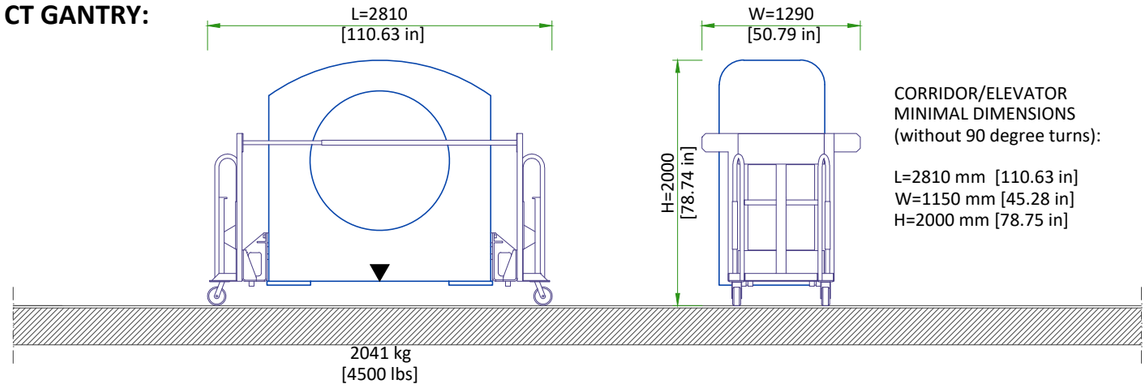

PATIENT TABLE:

CORRIDOR/ELEVATOR MINIMAL DIMENSIONS (without 90 degree turns):

L=2809 mm [110.6 in] W=1000 mm [39.4 in] H=1400 mm [55.1 in] Weight: 557 kg [1228 lb]

NM GANTRY:

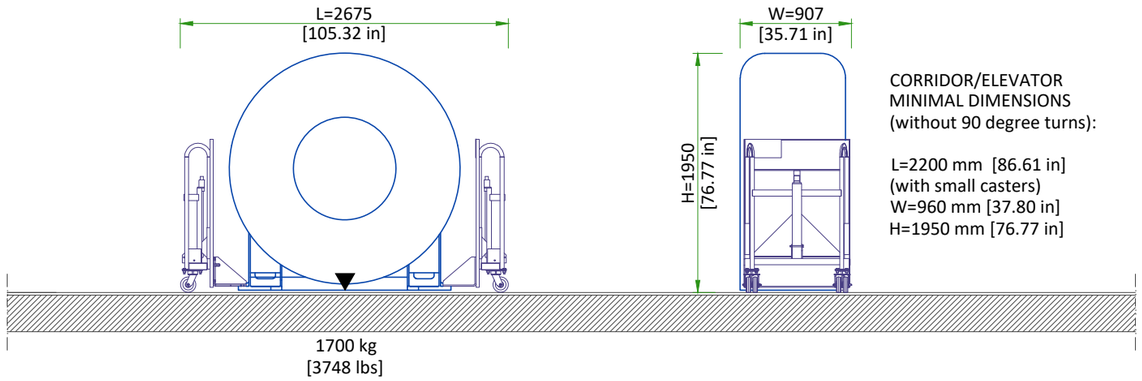

NOT TO SCALE

STRUCTURAL NOTES

- All units that are wall mounted or wall supported are to be provided with supports where necessary. Wall supports are to be supplied and installed by the customer or his contractors. See plan and detail sheets for suggested locations and mounting hole locations.
- Floor slabs on which equipment is to be installed must be flat and level to specifications.
- Dimensions are to finished surfaces of room.
- For seismic regions ensure supports span three members.
- Customers contractor must provide all penetrations in post tension floors.
- Customers contractor must provide and install any non-standard anchoring. Documents for standard anchoring methods are included with GE equipment drawings for geographic areas that require such documentation.
- Customers contractor must provide and install hardware for "through the floor" anchoring and/or any bracing under access floors. This contractor must also provide floor drilling that cannot be completed because of an obstruction encountered while drilling by the GE installer such as rebar etc.
- It is the customer's responsibility to perform any floor or wall penetrations that may be required. The customer is also responsible for ensuring that no subsurface utilities (e.g., electrical or any other form of wiring, conduits, piping, duct work or structural supports (i.e. post tension cables or rebar)) will interfere or come in contact with subsurface penetration operations (e.g. drilling and installation of anchors/screws) performed during the installation process. To ensure worker safety, GE installers will perform surface penetration operations only after the customer's validation and completion of the "GE surface penetration permit"

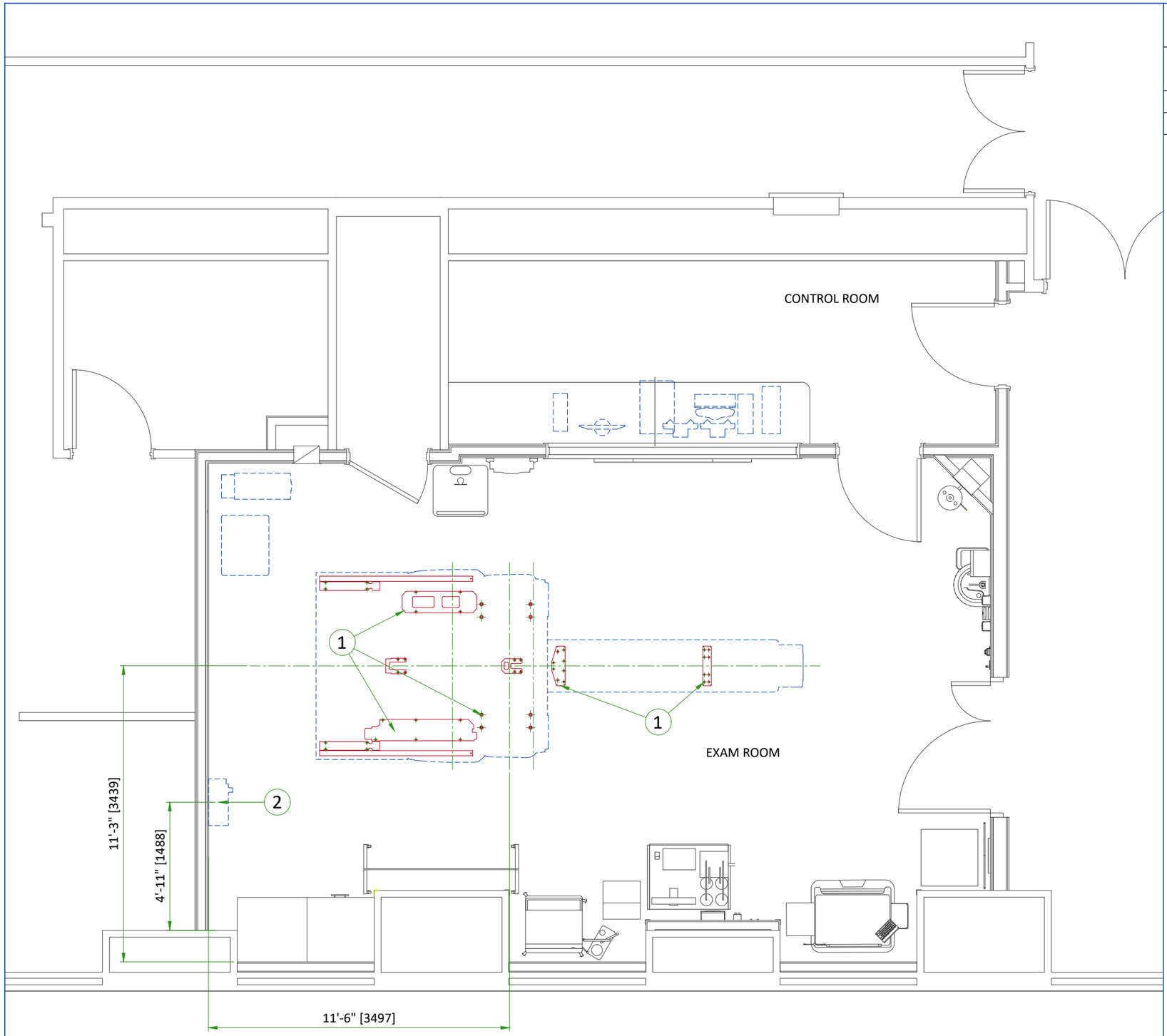

ITEM	DESCRIPTION
1	Floor contact area for discovery gantry and patient table. See detail on sheet S3 for more information.
	(CONTRACTOR SUPPLIED & INSTALLED)
2	Support Backing, locate as shown

ANCHORING/LOADING DISTRIBUTION TO THE FLOOR

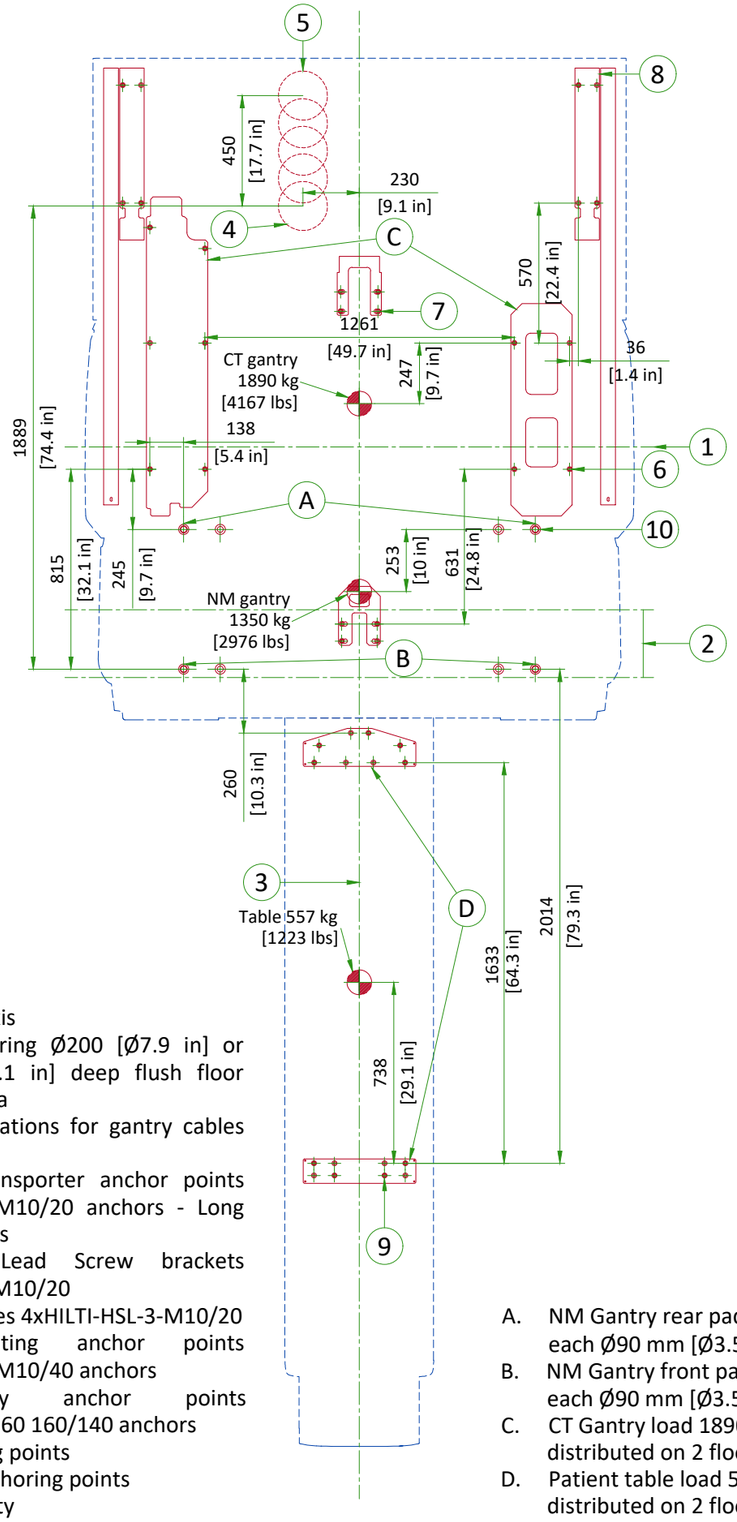

(1) CT Scan Line
(2) NM FOV
(3) Longitudinal Axis
(4) Cable inlet coring Ø200 [Ø7.9 in] or 200x80 [7.9x3.1 in] deep flush floor duct in this area
(5) Alternative locations for gantry cables inlet
(6) CT Gantry transporter anchor points 8×HILTI-HSL-3-M10/20 anchors - Long and short plates
(7) CT Service Lead Screw brackets 4xHILTI-HSL-3 M10/20
(8) CT Service Plates 4xHILTI-HSL-3-M10/20
(9) Table mounting anchor points 9×HILTI-HSL-3-M10/40 anchors
(10) NM Gantry anchor points 4×HST3-M16x260 160/140 anchors

Main anchoring points
Alternative anchoring points
Center of gravity

A. NM Gantry rear pads 375 Kg [827 lb] on each Ø90 mm [Ø3.5 in] pad
B. NM Gantry front pads 300 Kg [661 lb] on each Ø90 mm [Ø3.5 in] pad
C. CT Gantry load 1890 Kg [4167 lb] distributed on 2 floor plates
D. Patient table load 557 Kg [1223 lb] distributed on 2 floor plates

SCALE 1:25

FLOOR SPECIFICATIONS

NM GANTRY MAIN ANCHORING

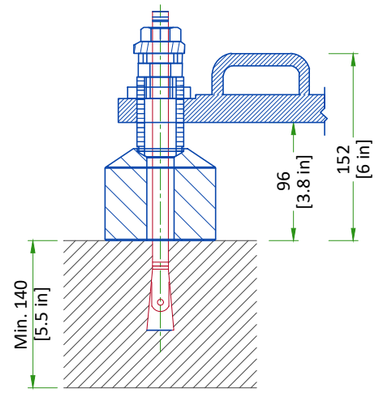

CT TRANSPORTER ANCHORING

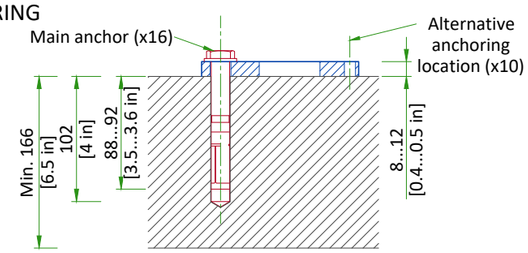

NOT TO SCALE

- Floor leveling area: 537 cm x 217 cm [17.6 ft x7.2 ft] (covering the entire planned area of table and gantry surface)
- Slope less than 7 mm [0.28 in] over 1000 mm [39.37 in]
- Flatness: the surface must be smooth, with deviations of no more than 5 mm [0.2 in] over 1500 mm [59 in] in any direction
- Floor surface: a single poured surface
- Floor strength: in order to enable mounting of the system floor anchors, concrete floors must have a minimum cube strength of fc=4350 psi. (30 MPa) at 28 days (curing time) for 25/30 concrete
- Floor thickness: the system's floor anchors are designed for use only on concrete floors that meet the minimal 140 mm [6.5 in] concrete floor requirements
- It is the customer/contractor responsibility to have appropriate tests performed to determine and measure concrete strength

TEMPERATURE AND HUMIDITY SPECIFICATIONS

IN-USE CONDITIONS

	EXAM ROOM			CONTROL ROOM		
Temperature	Min	Recommended	Max	Min	Recommended	Max
	18°C [64°F]	22°C [72°F]	26°C [79°F]	18°C [64°F]	22°C [72°F]	26°C [79°F]
Temperature gradient	**≤ 3°C/h [≤ 5°F/h]**			**≤ 3°C/h [≤ 5°F/h]**		
Relative humidity (1)	30% to 60%			30% to 60%		
Humidity gradient	**≤ 5%/h**			**≤ 5%/h**		

CT STORAGE CONDITIONS

Temperature	-20°C to +70°C
	-4°F to +158°F
Temperature gradient	**≤ 3°C/h (≤ 5°F/h)**
Relative humidity (1)	20% to 95%
Atmospheric pressure	50kPa to 106kPa
Humidity gradient	**≤ 5%/h**

NM STORAGE CONDITIONS (2)

Temperature	+5°C to +50°C
	+41°F to +122°F
Temperature gradient	**≤ 3°C/h (≤ 5°F/h)**
Relative humidity (1)	30% to 70%
Atmospheric pressure	70kPa to 106kPa
Humidity gradient	**≤ 5%/h**

(1) non condensing
(2) NM subsystem: The NM gantry is shipped, with the detectors assembled, via Pharma shipment, in a controlled environment.

AIR RENEWAL

According to local standards.

NOTE
In case of using air conditioning systems that have a risk of water leakage it is recommended not to install it above electric equipment or to take measures to protect the equipment from dropping water.

HEAT DISSIPATION

ROOM	DESCRIPTION	HEAT DISSIPATION (kW)	HEAT DISSIPATION (BTU/hr)
		MAX	MAX
Exam Room	NM Gantry	2.273	7750
	CT Gantry	2.750	9383
	Patient Table	0.200	682
	Power Distribution Unit (PDU)	0.996	3400
	Partial UPS	1.501	5122
	TOTAL	**7.720**	**26337**
Control Room	CT console	0.938	3200
	NM Acquisition Station (computer only)	0.075	256
	Image Generator Console (computer only)	0.150	510
	Xeleris Workstation (computer with 2 monitors)	0.075	256
	TOTAL	**1.238**	**4222**

CONNECTIVITY REQUIREMENTS

Your new GE Healthcare imaging modality will require local and remote connectivity to enable our full range of digital support:

- Local connectivity - This allows your system to connect to local devices such as PACS and modality worklist. We will require network information to configure the system(s), and a live ethernet port(s) prior to the delivery of the system(s).
- Remote connectivity - Your GE Healthcare service warranty includes InSite™ (applicable to InSite capable products), a powerful broadband-based service which enables digital tools that can help guard your hospital against equipment downtime and revenue loss by quickly connecting you to a GE Healthcare expert.

Depending on product family and software version, imaging systems can be connected in one of the following methods:

1. TLS over TCP Port 443 (Preferred method for new products) via:
    a. DNS resolution
    b. Customer-provided Proxy or
    c. GE Proxy (Available in some regions)
2. Site-to-Site IPsec VPN tunnel

Please provide the GE project manager with the contact information for the resource that can provide information required to set up these connections. GEHC will send out communication to these contacts, which will include the project's Connectivity requirements, and a Connectivity form. This form will need to be completed and returned to GEHC prior to delivery of the system to ensure the system is tested and connectivity is enabled prior to the completion of the installation.

ELECTRICAL NOTES

1. All wires specified shall be copper stranded, flexible, thermo-plastic, color coded, cut 10 foot long at outlet boxes, duct termination points or stubbed conduit ends. All conductors, power, signal and ground, must be run in a conduit or duct system. Electrical contractor shall ring out and tag all wires at both ends. Wire runs must be continuous copper stranded and free from splices.

1.1. Aluminum or solid wires are not allowed.

2. Wire sizes given are for use of equipment. Larger sizes may be required by local codes.
3. It is recommended that all wires be color coded, as required in accordance with national and local electrical codes.
4. Conduit sizes shall be verified by the architect, electrical engineer or contractor, in accordance with local or national codes.
5. Convenience outlets are not illustrated. Their number and location are to be specified by others. Locate at least one convenience outlet close to the system control, the power distritbution unit and one on each wall of the procedure room. Use hospital approved outlet or equivalent.
6. General room illumination is not illustrated. Caution should be taken to avoid excessive heat from overhead spotlights. Damage can occur to ceiling mounting components and wiring if high wattage bulbs are used. Recommend low wattage bulbs no higher than 75 watts and use dimmer controls (except MR). Do not mount lights directly above areas where ceiling mounted accessories will be parked.
7. Routing of cable ductwork, conduits, etc., must run direct as possible otherwise may result in the need for greater than standard cable lengths (refer to the interconnection diagram for maximum usable lengths point to point).
8. Conduit turns to have large, sweeping bends with minimum radius in accordance with national and local electrical codes.
9. A special grounding system is required in all procedure rooms by some national and local codes. It is recommended in areas where patients might be examined or treated under present, future, or emergency conditions. Consult the governing electrical code and confer with appropriate customer administrative personnel to determine the areas requiring this type of grounding system.
10. The maximum point to point distances illustrated on this drawing must not be exceeded.
11. Physical connection of primary power to GE equipment is to be made by customers electrical contractor with the supervision of a GE representative. The GE representative would be required to identify the physical connection location, and insure proper handling of GE equipment.
12. GEHC conducts power audits to verify quality of power being delivered to the system. The customer's electrical contractor is required to be available to support this activity.

- All junction boxes, conduit, duct, duct dividers, switches, circuit breakers, cable tray, etc., are to be supplied and installed by customers electrical contractor.
- Conduit and duct runs shall have sweep radius bends
- Conduits and duct above ceiling or below finished floor must be installed as near to ceiling or floor as possible to reduce run length.
- Ceiling mounted junction boxes illustrated on this plan must be installed flush with finished ceiling.
- All ductwork must meet the following requirements:

1.Ductwork shall be metal with dividers and have removable, accessible covers.
2.Ductwork shall be certified/rated for electrical power purposes.
3.Ductwork shall be electrically and mechanically bonded together in an approved manner.
4.PVC as a substitute must be used in accordance with all local and national codes.

- All openings in raceway and access flooring are to be cut out and finished off with grommet material by the customers contractor.
- General contractor to insert pull cords for all cable run conduits between the equipment room and the operators control room.
- 10 foot pigtails at all junction points.
- Grounding is critical to equipment function and patient safety. Site must conform to wiring specifications shown on this plan.

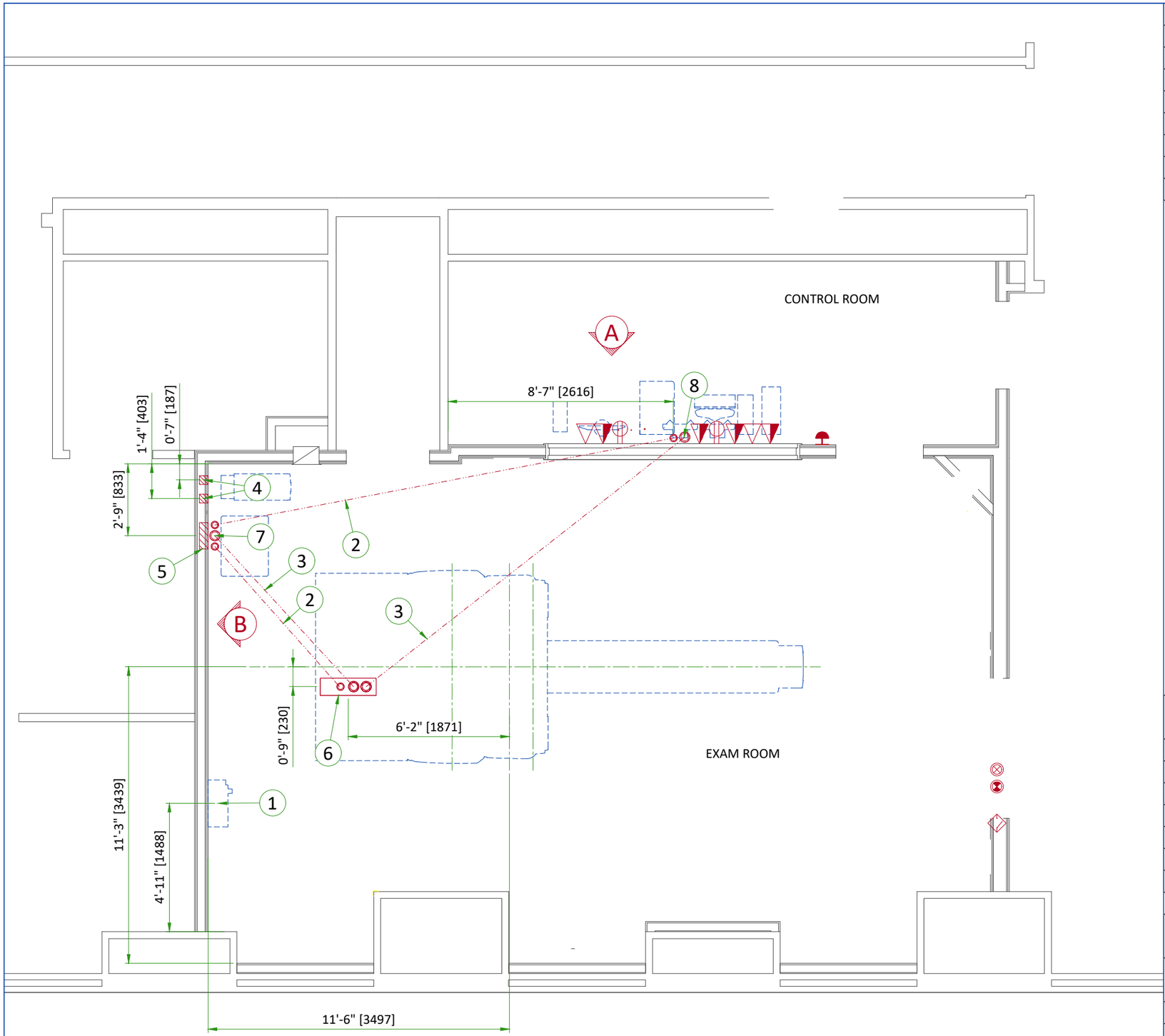

Item	Electrical Layout Item List
1	Main disconnect panel (recommended 1 1/2m [60 in] floor to middle of panel)
2	2 1/2" [64] conduit below floor
3	3 1/2" [89] conduit below floor
4	4" x 4" x 4" [100 x 100 x 100] box 18" [450] above finished floor (Partial UPS)
5	12" x 16" x 6" [300 x 400 x 150] box (Power Distribution Unit)
6	Suitable bushings & lock nuts (Gantry)
7	Suitable bushings & lock nuts (PDU)
8	Suitable bushings & lock nuts (Operator's Console)

ITEM	QTY	Electrical Outlet Legend Customer/contractor supplied and installed items unless otherwise specified. Height above floor determined by local codes unless otherwise specified.
		System emergency off (SEO), (recommended height 1.2m [48"] above floor)
		X-Ray room warning light control panel
		X-Ray ON lamp (L1) - 24V
		Door interlock switch (needed only if required by state/local codes)
		Dedicated telephone line(s)
		Network outlet
		Duplex hospital grade, dedicated wall outlet 120-v, single phase power

Additional Conduit Runs
(Contractor Supplied and Installed)

From (Bubble # / Item)		To (Bubble # / Item)		Qty	Size In.	Size mm
	3 Phase Power	1	Main Disconnect Panel	1	As req'd	As req'd
1	Main Disconnect Panel		Emergency Off	1	1	13
		5	Power Distribution Unit	1	As req'd	As req'd
5	Power Distribution Unit		Door Switch	1	1	13
			Warning Light Control	1	1	13
	Warning Light			1	1	13
	1 Phase Power			1	1	13
1	Main Disconnect Panel	4	Partial UPS	1	1 1/4	30
5	Power Distribution Unit			1	2	50

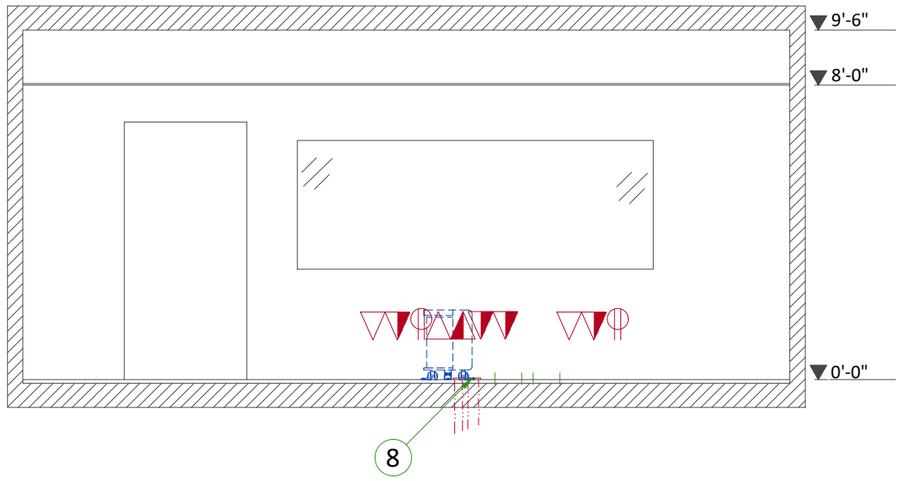

A

B

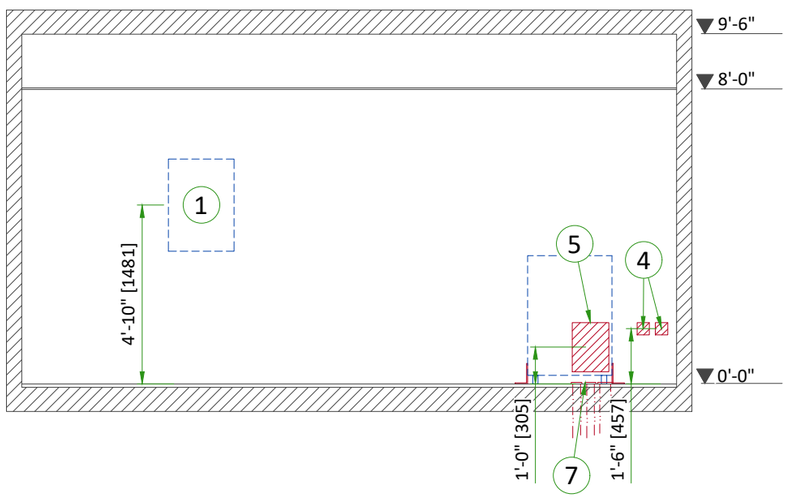

C

D

POWER REQUIREMENTS

POWER SUPPLY

POWER SUPPLY	**380/400/420/440/460/480V ± 6%, 3 PHASE + GND**
FREQUENCIES	**50/60 Hz ± 3 Hz**
MAXIMUM POWER DEMAND	**90 kVA**
AVERAGE (CONTINUOUS) POWER DEMAND	**22 kVA**
POWER FACTOR	**0.85 (140 kV, 380 mA)**

- Power supply should come into a Main Disconnect Panel (MDP) containing the protective units and controls.
- Governing electrical codes may require a neutral wire. If present, neutral must be terminated in MDP.
- The section of the supply cable should be calculated in accordance with its length and the maximum permissible voltage drops.
- There must be difference between supply cable protective device at the beginning of the installation (main low-voltage transformer side) and the protective devices in the MDP.

SUPPLY CHARACTERISTICS

- Power input must be separate from any others which may generate transients (elevators, air conditioning, radiology rooms equipped with high speed film changers...).
- All equipment (lighting, power outlets, etc...) installed with GE system components must be powered separately.
- Phase imbalance 2% maximum.
- Maximum voltage variation at full load = 6% (Including line impedance).
- Transients must be less than 1500 V peak. (on a 400 V line)

GROUND SYSTEM

- System of equipotential grounding.
- Equipotential: The equipotential link will be by means of an equipotential bar. This equipotential bar should be connected to the protective earth conductors in the ducts of the non GE cableways and to additional equipotential connections linking up all the conducting units in the rooms where GE system units are located.
- The impedance of the earth bar should be less than or equal to 0.5 Ohm.

CABLES

- Power and cable installation must comply with the distribution diagram.
- All cables must be isolated and flexible, cable color codes must comply with standards for electrical installation.
- The cables from signaling and remote control (Y, SEO, L...) will go to MDP with a pigtail length of 1.5 m, and will be connected during installation. Each conductor will be identified and isolated (screw connector).

CABLEWAYS

The general rules for laying cableways should meet the conditions laid down in current standards and regulations, with regard to:

- Protecting cables against water (cableways should be waterproof).
- Protecting cables against abnormal temperatures (proximity to heating pipes or ducts).
- Protecting cables against temperature shocks.
- Replacing cables (cableways should be large enough for cables to be replaced).
- Metal cableways should be grounded.

POWER DISTRIBUTION

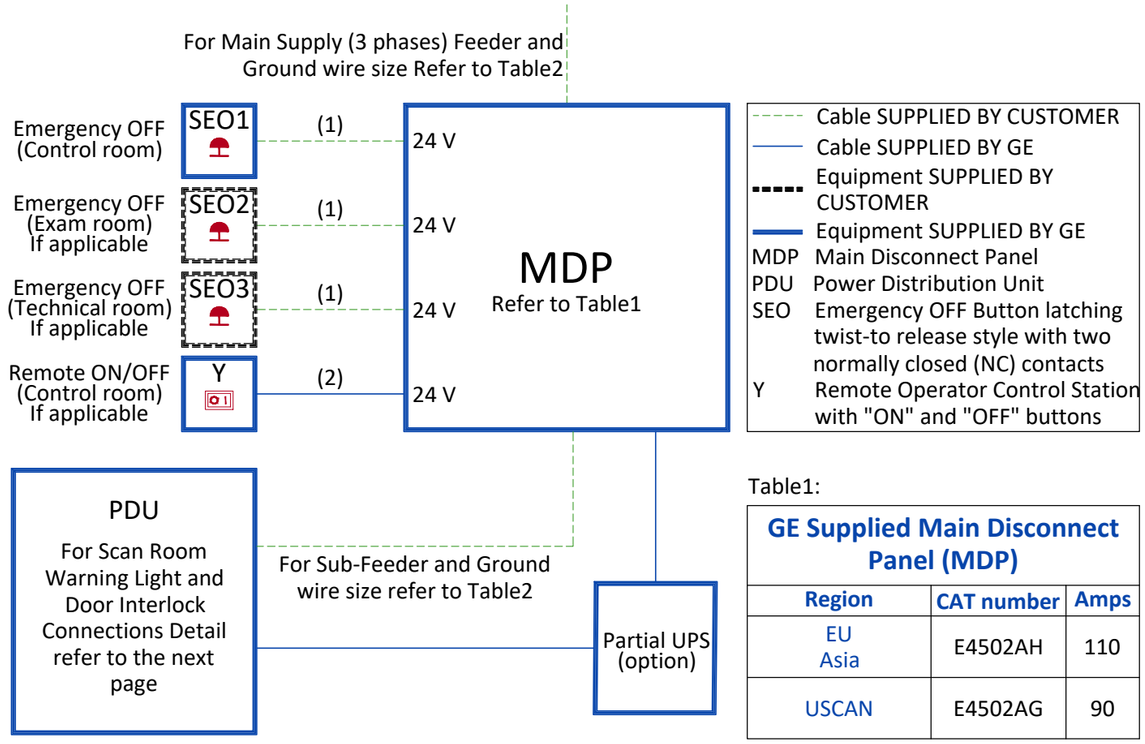

Table1:

GE Supplied Main Disconnect Panel (MDP)		
Region	**CAT number**	**Amps**
EU Asia	E4502AH	110
USCAN	E4502AG	90

Table2:

Feeder Table						
The information below assumes the use of copper wire, rated 75 C and run in steel conduit. All ampacity is determined in accordance with the National Electrical Code (NFPA 70), Table 310-16 (2002). The ampacity of the circuit protection device listed above determines the minimum feeder size, except where total source regulation limits require a larger size. If the wire size does not match the below list, please select the nearest wire size as per to local standards.						
Feeder length from Power Substation to MDP - ft (m)	**Minimum Wire Size, AWG or MCM (mm²)/VAC**					
	380 VAC	400 VAC	420 VAC	440 VAC	460 VAC	480 VAC
50 (15)	2 (35)	2 (35)	3 (30)	3 (30)	3 (30)	3 (30)
100 (30)	2 (35)	2 (35)	3 (30)	3 (30)	3 (30)	3 (30)
150 (46)	2 (35)	2 (35)	3 (30)	3 (30)	3 (30)	3 (30)
200 (61)	2 (35)	2 (35)	3 (30)	3 (30)	3 (30)	3 (30)
250 (76)	1 (45)	1 (45)	2 (35)	2 (35)	2 (35)	3 (30)
300 (91)	1/0 (50)	1/0 (50)	1 (45)	1 (45)	2 (35)	2 (35)
350 (107)	2/0 (70)	1/0 (50)	1/0 (50)	1 (45)	1 (45)	1 (45)
400 (122)	2/0 (70)	2/0 (70)	1/0 (50)	1/0 (50)	1/0 (50)	1 (45)
Sub-Feeder length from MDP to PDU - ft (m)						
32 (9.7536)	2 (35)	2 (35)	3 (30)	3 (30)	3 (30)	3 (30)
Grounding						
Run a dedicated 1/0 [50 mm²] or larger insulated copper ground wire from the power source to the MDP and from MDP to the PDU. Run the ground wire in the same raceway with the three-phase wires.						

Notes :

(1) Wire size: 4x2mm² [14AWG] and 1x2mm² [14AWG] GND

(2) Power control cable: 3 m [10 ft], multi-conductor, 24V DC

TYPICAL CABLE MANAGEMENT

CONDUIT IN THE FLOOR

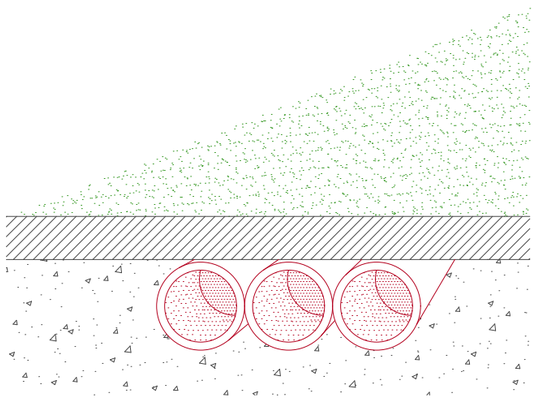

NOT TO SCALE

SCAN ROOM WARNING LIGHT AND DOOR INTERLOCK

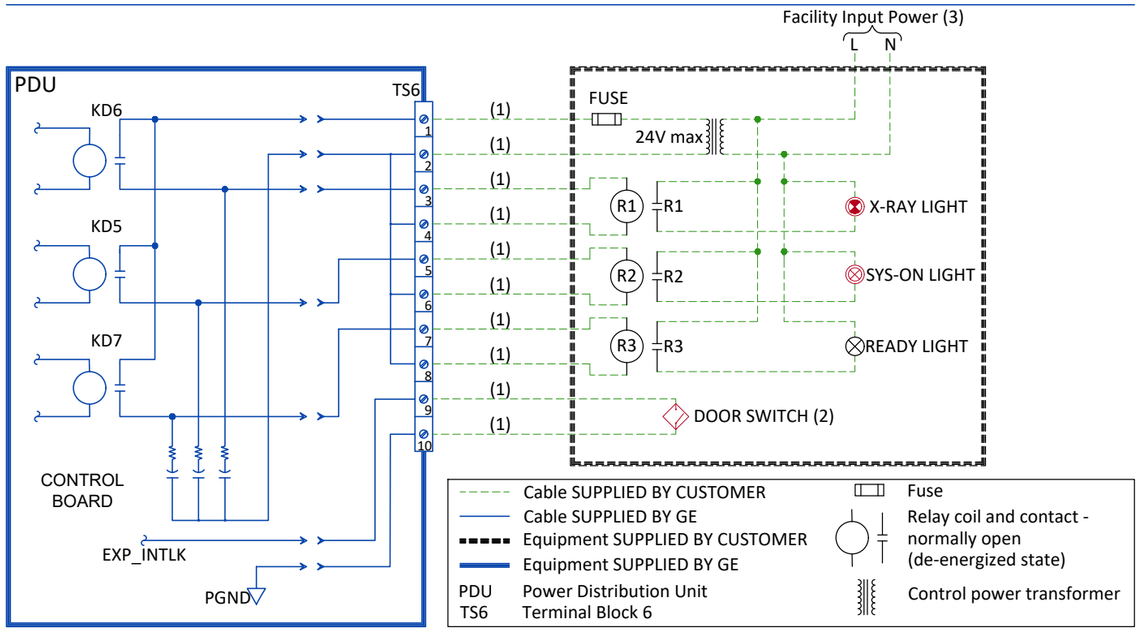

Notes :

(1) Wire size: 2mm² [14 AWG] at 24V

(2) Door Interlock circuit is jumpered out if a door switch is not provided.

(3) Grounding not shown on the detail, but must comply with local codes.

INTERCONNECTIONS

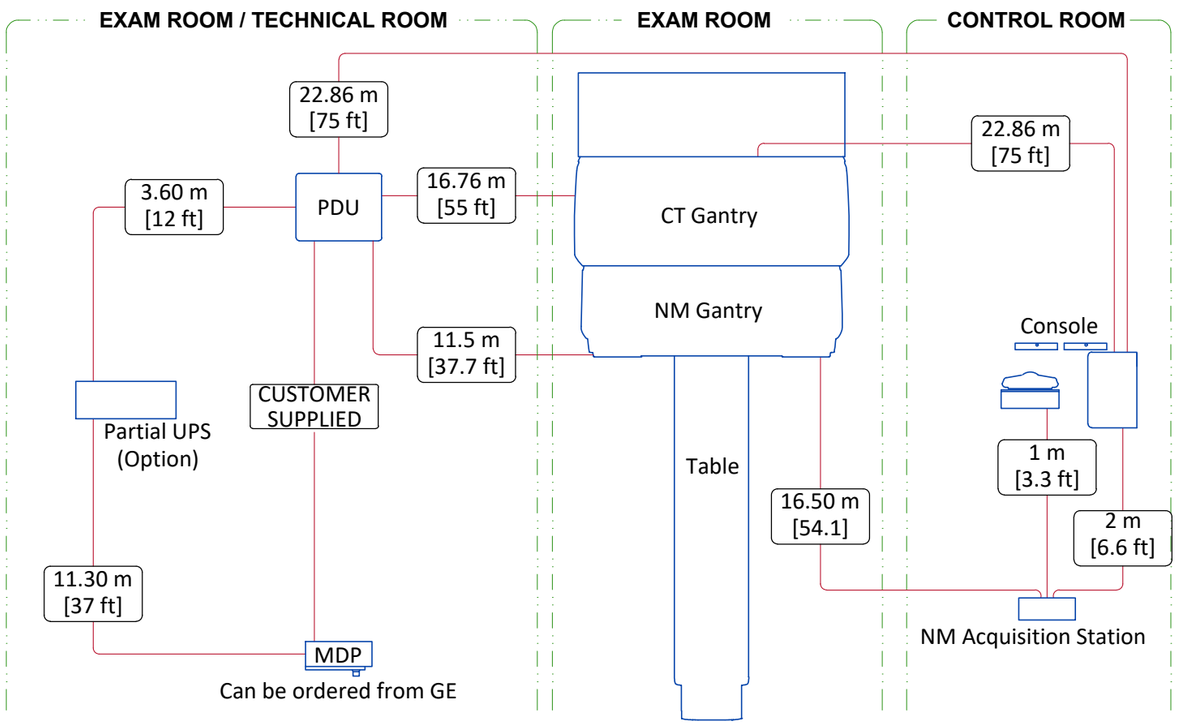

GE HealthCare

StarGuide

Pre-Installation Manual

5845893-1EN
Revision 3

General service documentation.
© 2021 - 2024 GE HealthCare. GE is a trademark of General Electric Company used under trademark license.
Reproduction and/or distribution is prohibited.

Revision History

Revision	Date	Description of Changes
3	April 2024	• Updated 1.2.1 Using Radioactive Isotopes on page 20: added alternative to E8690AH • Updated 5.2 Power Supply Requirements on page 84: removed requirement for neutral wire. • Added Appendix E System Interconnect Diagrams on page 123 for two configurations: *HP Z4 Common PC* and *HP Z4 Standalone*. • Updated heat output calculations in 4.2 Heat Output on page 80
2	October 2021	• Updated 1.3.1 Temperature Precautions During Transportation and Delivery on page 22 • Updated 1.4 Product Storage and Handling Requirements on page 30 • Updated 2.3.1.3 Floor Anchoring on page 56 • Notes added to Figure 2-8 Minimal scan room size - 1.85m CT Scan range on page 41 and Figure 2-9 Minimal scan room size - 1.6m CT Scan range on page 42 • Updated heat output calculations in 4.2 Heat Output on page 80
		Updated: • Section 2.3.1.2 Floor Loading Requirements on page 47 including: ◦ Figure 2-16 CT Open Console Center of Gravity on page 53 ◦ Figure 2-17 NM Acquisition / SmartConsole Computer (if applicable) – Center of Gravity Points on page 54
		Updated sections: • Delivery requirements, see 1.3.1 Temperature Precautions During Transportation and Delivery on page 22 • Room layout, see 2.2 Room Size, Layout and Considerations on page 39 • Add Z8 Center of Gravity (CoG) drawing, see 2.3.1.2 Floor Loading Requirements on page 47 • Removed seismic installation, see 2.4 Seismic Requirements on page 65 • Removed NM UPS from 2.1 Equipment and System Components on page 31 and 4.2 Heat Output on page 80 • 5.3.1 Grounding Requirements on page 85
1	July 2020	New manual

Language Policy

DOC0371395 - Global Language Procedure

ПРЕДУПРЕЖДЕНИЕ (BG)	Това ръководство е налично само на китайски (ZH-CN), английски, френски, немски, японски, корейски, полски, португалски (PT-BR), руски, испански и виетнамски. Ако доставчикът на услуги на даден клиент изисква език, който е различен от тези езици, отговорност на клиента е да предостави преводачески услуги.
警告 (ZH-CN)	本手册仅提供中文 (ZH-CN)、英文、法语、德语、意大利语、日语、韩语、波兰语、葡萄牙语 (PT-BR)、俄语、西班牙语和越南语版本。如果客户的服务提供商需要其他语言，则客户有责任提供翻译服务。
警告 (ZH-HK)	本手冊僅提供中文 (ZH-CN)、英文、法文、德文、意大利文、日文、韓文、波蘭文、葡萄牙文 (PT-BR)、俄文、西班牙文及越南文版本。如客戶的服務供應商需要這些語言以外的版本，則相關客戶有責任提供有關的翻譯服務。
警告 (ZH-TW)	此手冊僅提供中文 (ZH-CN)、英文、法文、德文、義大利文、日文、韓文、波蘭文、葡萄牙文 (PT-BR)、俄文、西班牙文和越南文版本。假如客戶的服務提供者所需語言版本不在所列語言之中，客戶需自行負責提供翻譯服務。
UPOZORENJE (HR)	Ovaj je priručnik dostupan samo na kineskom (ZH-CN), engleskom, francuskom, njemačkom, talijanskom, japanskom, korejskom, poljskom, portugalskom (PT-BR), ruskom, španjolskom i vijetnamskom jeziku. Ako klijentov serviser zahtijeva jezik koji nije jedan od tih jezika, odgovornost je klijenta pružiti uslugu prevođenja.
VÝSTRAHA (CS)	Tato příručka je k dispozici pouze v čínštině (ZH-CN), angličtině, francouzštině, němčině, italštině, japonštině, korejštině, polštině, portugalštině (PT-BR), ruštině, španělštině a vietnamštině. Pokud poskytovatel služeb zákazníka vyžaduje jiný jazyk než tyto jazyky, je odpovědností zákazníka poskytovat překladatelské služby.
ADVARSEL (DA)	Denne vejledning findes kun på kinesisk (ZH-CN), engelsk, fransk, tysk, italiensk, japansk, koreansk, polsk, portugisisk (PT-BR), russisk, spansk og vietnamesisk. Hvis en kundes tjenesteudbyder kræver et andet sprog end disse sprog, er det kundens ansvar at levere oversættelsestjenester.
WAARSCHUWING (NL)	Deze handleiding is alleen beschikbaar in het Chinees (ZH-CN), Engels, Frans, Duits, Italiaans, Japans, Koreaans, Pools, Portugees (PT-BR), Russisch, Spaans en Vietnamees. Als de serviceprovider van een klant een andere taal dan deze talen vereist, is het de verantwoordelijkheid van de klant om vertaalservices te leveren.
WARNING (EN)	This manual is available in Chinese (ZH-CN), English, French, German, Italian, Japanese, Korean, Polish, Portuguese (PT-BR), Russian, Spanish, and Vietnamese only. If a customer's service provider requires a language other than these languages, it is the customer's responsibility to provide translation services.
HOIATUS (ET)	See juhend on saadaval ainult hiina (ZH-CN), inglise, prantsuse, saksa, itaalia, jaapani, korea, poola, portugali (PT-BR), vene, hispaania ja vietnami keeles. Kui kliendi teenusepakkujal on vaja juhendit mõnes muus keeles, on tõlketeenuste osutamine kliendi kohustus.
VAROITUS (FI)	Tämä opas on saatavilla vain kiinaksi (ZH-CN), englanniksi, ranskaksi, saksaksi, italiaksi, japaniksi, koreaksi, puolaksi, portugaliksi (PT-BR), venäjäksi, espanjaksi ja vietnamiksi. Jos asiakkaan palveluntarjoaja edellyttää muuta kuin näitä kieliä, käännöspalveluiden tarjoaminen on asiakkaan vastuulla.
ATTENTION (FR)	Ce manuel est disponible uniquement en allemand, anglais, chinois (ZH-CN), coréen, espagnol, français, italien, japonais, polonais, portugais (PT-BR), russe et vietnamien. Si le prestataire de services d'un client nécessite que le manuel soit rédigé dans une autre langue que celles mentionnées ci-dessus, il incombe au client de le faire traduire.
WARNUNG (DE)	Dieses Handbuch ist nur auf Chinesisch (ZH-CN), Englisch, Französisch, Deutsch, Italienisch, Japanisch, Koreanisch, Polnisch, Portugiesisch (PT-BR), Russisch, Spanisch und Vietnamesisch verfügbar. Wenn ein Dienstleister des Kunden dieses in einer anderen Sprache als die genannten benötigt, liegt es in der Verantwortung des Kunden, Übersetzungsdienstleistungen zu erbringen.

ΠΡΟΕΙΔΟΠΟΙΗΣΗ (EL)	Αυτό το εγχειρίδιο είναι διαθέσιμο μόνο σε Κινεζικά (ZH-CN), Αγγλικά, Γαλλικά, Γερμανικά, Ιταλικά, Ιαπωνικά, Κορεατικά, Πολωνικά, Πορτογαλικά (PT-BR), Ρωσικά, Ισπανικά και Βιετναμέζικα. Εάν ο πάροχος υπηρεσιών ενός πελάτη απαιτεί γλώσσα που δεν συμπεριλαμβάνεται σε αυτές τις γλώσσες, αποτελεί ευθύνη του πελάτη να παρέχει υπηρεσίες μετάφρασης.
FIGYELMEZTETÉS (HU)	Ez a kézikönyv az alábbi nyelveken érhető el: angol, francia, japán, kínai (ZH-CN), koreai, lengyel, német, olasz, orosz, portugál (PT-BR), spanyol és vietnámi. Ha az ügyfél szolgáltatója ezektől eltérő nyelvű kézikönyvet szeretne, akkor az ügyfél feladata, hogy gondoskodjon a megfelelő fordításról.
AÐVÖRUN (IS)	Þessi handbók er aðeins fáanleg á kínversku (ZH-CN), ensku, frönsku, þýsku, ítölsku, japönsku, kóresku, pólsku, portúgölsku (PT-BR), rússnesku, spænsku og víetnömsku. Ef þjónustuaðili viðskiptavinar þarfnast annars tungumáls en þessara tungumála er það á ábyrgð viðskiptavinarins að veita þýðingarþjónustu.
AVVERTENZA (IT)	Questo manuale è disponibile solo in lingua cinese (ZH-CN), inglese, francese, tedesco, italiano, giapponese, coreano, polacco, portoghese (PT-BR), russo, spagnolo e vietnamita. Qualora un fornitore di servizi del cliente richieda una lingua diversa dall'inglese, sarà responsabilità del cliente fornire il servizio di traduzione corrispondente.
警告 (JA)	このマニュアルは、中国語 (ZH-CN)、英語、フランス語、ドイツ語、イタリア語、日本語、韓国語、ポーランド語、ポルトガル語 (PT-BR)、ロシア語、スペイン語、およびベトナム語のみで提供されています。お客様のサービスプロバイダがこれらの言語以外の言語を必要とする場合は、お客様の責任において翻訳サービスを提供してください。
경고 (KO)	이 설명서는 중국어(중국어-중국), 영어, 프랑스어, 독일어, 이탈리아어, 일본어, 한국어, 폴란드어, 포르투갈어(포르투갈어-브라질), 러시아어, 스페인어, 베트남어로만 제공됩니다. 고객의 서비스 제공자가 이 언어를 제외한 다른 언어를 요구하는 경우, 번역 서비스를 제공하는 것은 고객의 책임입니다.
BRĪDINĀJUMS (LV)	Šī rokasgrāmata ir pieejama tikai ķīniešu (ZH-CN), angļu, franču, vācu, itāliešu, japāņu, korejiešu, poļu, portugāļu (PT-BR), krievu, spāņu un vjetnamiešu valodā. Ja klientu apkalpošanas speciālistam ir nepieciešama cita valoda, kas atšķiras no šeit norādītajām, klienta pienākums ir nodrošināt tulkošanas pakalpojumus.
ĮSPĖJIMAS (LT)	Šis vadovas pateikiamas tik kinų (ZH-CN), anglų, prancūzų, vokiečių, italų, japonų, korėjiečių, lenkų, portugalų (PT-BR), rusų, ispanų ir vietnamiečių kalbomis. Jei klientų paslaugų teikėjui reikalinga kita nei šios kalba, už vertimo paslaugų suteikimą atsako klientas.
ADVARSEL (NO)	Denne håndboken er bare tilgjengelig på kinesisk (ZH-CN), engelsk, fransk, tysk, italiensk, japansk, koreansk, polsk, portugisisk (PT-BR), russisk, spansk og vietnamesisk. Hvis en kundes tjenesteleverandør krever et annet språk, er det kundens ansvar å levere en oversettelsestjeneste.
OSTRZEŻENIE (PL)	Niniejsza instrukcja jest dostępna wyłącznie w języku chińskim (ZH-CN), angielskim, francuskim, niemieckim, włoskim, japońskim, koreańskim, polskim, portugalskim (PT-BR), rosyjskim, hiszpańskim i wietnamskim. Jeśli usługodawca klienta wymaga języka, który nie został wymieniony powyżej, obowiązkiem klienta jest zapewnienie usług tłumaczeniowych.
ATENÇÃO (PT-BR)	Este manual está disponível somente em chinês (ZH-CN), inglês, francês, alemão, italiano, japonês, coreano, polonês, português (PT-BR), russo, espanhol e vietnamita. Se o prestador de serviços de um cliente necessitar de um idioma diferente dos mencionados, o fornecimento dos serviços de tradução é de responsabilidade do cliente.
ATENÇÃO (PT-PT)	Este manual está disponível apenas em alemão, chinês (ZH-CN), coreano, espanhol, francês, inglês, italiano, japonês, polaco, português (PT-BR), russo e vietnamita. Se o fornecedor de serviços de um cliente necessitar de um idioma diferente dos listados aqui, é da responsabilidade do cliente assegurar os serviços de tradução.

ATENŢIE (RO)	Acest manual este disponibil numai în limbile chineză (ZH-CN), engleză, franceză, germană, italiană, japoneză, coreeană, poloneză, portugheză (PT-BR), rusă, spaniolă şi vietnameză. Dacă furnizorul de servicii al unui client solicită o limbă diferită faţă de aceste limbi, este responsabilitatea clientului să furnizeze servicii de traducere.
ОСТОРОЖНО! (RU)	Настоящее руководство доступно только на китайском (ZH-CN), английском, французском, немецком, итальянском, японском, корейском, польском, португальском (PT-BR), русском, испанском и вьетнамском языках. Если поставщику услуг заказчика требуется руководство на каком-либо другом языке, перевод руководства на необходимый язык осуществляется стороной заказчика.
UPOZORENJE (SR)	Ovaj priručnik dostupan je samo na kineskom (ZH-CN), engleskom, francuskom, nemačkom, italijanskom, japanskom, korejskom, poljskom, portugalskom (PT-BR), ruskom, španskom i vijetnamskom jeziku. Ako korisnik kao pružalac usluge zahteva neki drugi jezik od navedenih, njegova je dužnost da obezbedi prevod.
UPOZORNENIE (SK)	Táto príručka je dostupná len v nasledovných jazykoch: čínština (ZH-CN), angličtina, francúzština, nemčina, taliančina, japončina, kórejčina, poľština, portugalčina (PT-BR), ruština, španielčina a vietnamčina. Ak poskytovateľ služieb daného zákazníka požaduje iný ako tieto jazyky, za poskytnutie prekladateľských služieb zodpovedá zákazník.
ATENCIÓN (ES)	Este manual está disponible solo en chino (ZH-CN), inglés, francés, alemán, italiano, japonés, coreano, polaco, portugués (PT-BR), ruso, español y vietnamita. Si el proveedor de servicios de un cliente requiere un idioma distinto de estos idiomas, es responsabilidad del cliente proporcionar los servicios de traducción.
VARNING (SV)	Den här manualen finns endast tillgänglig på kinesiska (ZH-CN), engelska, franska, tyska, italienska, japanska, koreanska, polska, portugisiska (PT-BR), ryska, spanska och vietnamesiska. Om en kunds tjänsteleverantör behöver ett annat språk än dessa är det kundens ansvar att ordna med översättningstjänster.
OPOZORILO (SL)	Ta priročnik je na voljo v kitajščini (ZH-CN), angleščini, francoščini, nemščini, italijanščini, japonščini, korejščini, poljščini, portugalščini (PT-BR), ruščini, španščini in vietnamščini. Če kupčev ponudnik storitev potrebuje drug jezik, mora za prevod poskrbeti kupec.
DİKKAT (TR)	Bu kılavuz yalnızca Çince (ZH-CN), İngilizce, Fransızca, Almanca, İtalyanca, Japonca, Korece, Lehçe, Portekizce (PT-BR), Rusça, İspanyolca ve Vietnamca dillerinde mevcuttur. Müşteri servis sağlayıcısı bu dillerden başka bir dil talep ederse çeviri hizmeti sağlamak müşterinin sorumluluğundadır.
ЗАСТЕРЕЖЕННЯ (UK)	Цей посібник доступний лише китайською (ZH-CN), англійською, французькою, німецькою, італійською, японською, корейською, польською, португальською (PT-BR), російською, іспанською та в’єтнамською мовами. Якщо постачальник послуг замовника використовує мову, яку не вказано у цьому переліку, послуги з перекладу має забезпечити замовник.

Contents

Revision History **2**

Language Policy **2**

Figures **10**

Tables **12**

Safety Notices **14**

Indications, Terminology and System Names **16**

Document Conventions **17**

Chapter 1 General System Requirements **19**

1.1 Objectives and Overview 19

1.2 Customer Responsibilities 19

1.2.1 Using Radioactive Isotopes 20

1.2.2 Project Coordination 21

1.3 Delivery Requirements 22

1.3.1 Temperature Precautions During Transportation and Delivery 22

1.3.2 Delivery Unloading Area and Equipment 23

1.3.3 Conveyance of Crated System Components Within the Site 23

1.3.3.1 Rigging Limitations 24

1.3.4 Crated and Uncrated Weights, Measurements and Clearance 25

1.4 Product Storage and Handling Requirements 30

Chapter 2 Equipment Description and General Construction Requirements **31**

2.1 Equipment and System Components 31

2.2 Room Size, Layout and Considerations 39

2.2.1 Room Dimension Requirements 40

2.2.2 System Layout Drawings 40

2.2.3 Layout Considerations 44

2.3 Room Structural Requirements ... 46
2.3.1 Floor Requirements ... 47
2.3.1.1 Floor Strength ... 47
2.3.1.2 Floor Loading Requirements ... 47
2.3.1.3 Floor Anchoring ... 56
2.3.1.4 Floor Levelness and Flatness ... 61
2.3.1.5 Floor Vibration ... 62
2.3.1.6 Floor Conductivity Recommendations ... 62
2.3.1.7 Additional Floor Requirements ... 63
2.3.2 Ceiling Requirements ... 63
2.3.3 Wall Requirements ... 63
2.3.4 Acoustic Specifications ... 63
2.3.5 Vibration Specifications ... 64
2.4 Seismic Requirements ... 65
Chapter 3 Special Construction Requirements ... 67
3.1 Radiation Protection and Shielding Requirements ... 67
3.2 Background Radiation ... 68
3.3 Scan Room Shielding ... 68
3.4 Magnetic Field Considerations ... 73
3.5 EMI Considerations ... 74
3.5.1 Electrostatic Discharge Environment & Recommendations ... 74
3.5.2 Electro-Magnetic Interference (EMI) System Placement ... 74
3.5.3 Electromagnetic Immunity ... 75
3.5.4 Recommended Separation Distances ... 75
3.5.5 Cable Shielding and Grounding ... 76
3.5.6 System Electromagnetic Radiation Disturbance ... 76
Chapter 4 Environmental HVAC Requirements ... 77
4.1 General Guidelines ... 77
4.2 Heat Output ... 80
4.3 Air Quality ... 80

Chapter 5 Electrical Requirements 82
5.1 Power Feed 82
5.2 Power Supply Requirements 84
5.3 Grounding 85
5.3.1 Grounding Requirements 85
5.3.2 Grounding of System Input Power 87
5.4 Interconnections 87
5.5 System Cable Information 89
5.6 Typical Customer Supplied Cables and Wiring 91
5.6.1 MDP (A1) 91
5.6.2 Primary Power Disconnect 94
5.6.3 Warning Light and Door Interlock Connections 94
5.7 Lighting Specifications 95
5.7.1 Scan Room Lighting 95
5.7.2 Operator Room Lighting 95
5.8 Power Line Outlets for Service 95
Chapter 6 Network and GE Remote Access Requirements 96
6.1 Network Requirements 96
6.2 RSVP Requirements 96
Appendix A Customer Checklist 98
Appendix B Measuring Floor Flatness 105
Appendix C EMC Compliance 111
Appendix D Regulatory Clearances 118
D.1 Regulatory Code Description 118
D.2 Regulated Minimum Working Clearance by Major Subsystem 119
D.3 Terms and Definitions 120

D.4 Additional Regulatory Clearance Information 121
D.4.1 Regulatory Caution 121
D.4.2 Egress Clearance 121
D.5 Service Clearances 121
Appendix E System Interconnect Diagrams 123

Figures

Figure 1 Sample Image . . . 18
Figure 1-1 NM Gantry on Dolly Measurements . . . 28
Figure 1-2 Door Opening vs Corridor Width for 90° Turn of NM Sub-system . . . 29
Figure 2-1 Scan Room Fixed Components . . . 32
Figure 2-2 Scan Room Moving Components . . . 33
Figure 2-3 Operator Room Components . . . 34
Figure 2-4 Gantry . . . 35
Figure 2-5 Table Views. . . . 36
Figure 2-6 CT Power Distribution Unit (PDU) . . . 37
Figure 2-7 CT Open Console . . . 38
Figure 2-8 Minimal scan room size - 1.85m CT Scan range. . . . 41
Figure 2-9 Minimal scan room size - 1.6m CT Scan range . . . 42
Figure 2-10 Example of Room Layout . . . 43
Figure 2-11 Safety Zone Marking . . . 45
Figure 2-12 NM Gantry Center of Gravity Points . . . 49
Figure 2-13 CT Gantry Center of Gravity Points . . . 50
Figure 2-14 Floor Loading and Center of Gravity Points for Gantry and Table . . . 51
Figure 2-15 Table Center of Gravity Points . . . 52
Figure 2-16 CT Open Console Center of Gravity . . . 53
Figure 2-17 NM Acquisition / SmartConsole Computer (if applicable) – Center of Gravity Points . . . 54
Figure 2-18 CT PDU Center of Gravity . . . 55
Figure 2-19 Image Generator Center of Gravity . . . 56
Figure 2-20 Main Drills and Cable Ducts. . . . 57
Figure 2-21 NM Gantry Anchors . . . 58
Figure 2-22 Speed Profile Specifications Micro m/s . . . 64
Figure 2-23 Acceleration Profile Specifications mm/s^2 . . . 65
Figure 3-1 Head Phantom Typical Scatter Survey . . . 70
Figure 3-2 Head Phantom Typical Scatter Survey (Side) . . . 71
Figure 3-3 Body Phantom Typical Scatter Survey (Top) . . . 72
Figure 3-4 Body Phantom Typical Scatter Survey (Side) . . . 73
Figure 4-1 Air-conditioning Ducts . . . 79

Figure 5-1 System Grounding Map 86
Figure 5-2 Example of Suggested Cable Ducts Routing 88
Figure 5-3 MDP (A1) Main Disconnect & UPS Control Panel 93
Figure E-1 System Interconnect Diagram (HP Z4 Standalone) 123
Figure E-2 System Interconnect Diagram (HP Z4 Common PC) 124

Tables

Table 1-1 Components and Clearance . . . 25
Table 1-2 Additional CT-specific Components and Clearance . . . 26
Table 1-3 Storage and Shipping Conditions . . . 30
Table 2-1 Components in Scan and Console Rooms . . . 39
Table 2-2 Weight of Components . . . 47
Table 2-3 Drilling and Anchor Chart . . . 59
Table 2-4 Floor Leveling Specifications . . . 61
Table 2-5 Seismic Subsystem Centers of Gravity and Anchoring Points . . . 65
Table 3-1 Shielding Requirements Scaling . . . 69
Table 3-2 Electro-Magnetic Interference (EMI) Constraints . . . 75
Table 4-1 Requirements for Ambient Temperature, Humidity and Altitude . . . 78
Table 4-2 Heat Output in Scan Room . . . 80
Table 5-1 System Power Characteristics . . . 82
Table 5-2 Nominal Power Line Ranges . . . 83
Table 5-3 Minimum Feeder Wire Size . . . 83
Table 5-4 Power Supply Requirements . . . 84
Table 5-5 Sub-system Inter-connection Cables . . . 89
Table 5-6 Connectors . . . 90
Table 5-7 Customer Supplied Cables and Wiring . . . 92
Table A-1 Deviation from Specifications in Site Preparation Manual . . . 99
Table A-2 Site Preparation Timetable . . . 99
Table A-3 Room Preparation . . . 99
Table A-4 Unloading, Conveyance and Storage . . . 101
Table A-5 Network Preparation . . . 103
Table A-6 Radioactive Isotopes for System Calibration . . . 104
Table B-1 Floor Flatness Conforming with 0.5 cm over 150 cm Specs (0.5 Deviation) . . . 107
Table B-2 Floor Flatness Outside 0.5 cm over 150 cm Specs (1.1 Deviation) . . . 108
Table B-3 Blank Table for Measurements . . . 109
Table C-1 EMC Emission Declaration . . . 111
Table C-2 Immunity Guidance and Declaration . . . 111
Table C-3 Spot Frequencies . . . 115

Table C-4 Separation Distances for Portable and Mobile RF Communications Equipment 116
Table C-5 Electromagnetic Compliance 117
Table D-1 Gantry Subsystem 119
Table D-2 UPS Subsystem 119
Table D-3 MDP (A1) Disconnect Subsystem 120

Safety Notices

Safety Labels in This Document

This manual addresses the following safety classifications:

⚠ DANGER

Danger is used to identify conditions or actions for which a *specific hazard* is known to exist, which *will cause severe or fatal personal injury* or substantial property damage if the instructions are ignored.

⚠ WARNING

Warnings are used to identify conditions or actions for which a *specific hazard* is known to exist, which *may cause severe or fatal personal injury* or substantial property damage if the instructions are ignored.

⚠ CAUTION

Cautions are used to identify conditions or actions for which a *potential hazard* may exist, which *may cause minor personal injury* or property damage if the instructions are ignored.

Safety-related Information in System Documentation

⚠ WARNING

- Before any attempt is made to use/service the system, the operator and service personnel must be trained, and must read and be acquainted with all *safety-related* information in the relevant documentation.
- This information will prepare all users to operate the equipment safely and correctly in order to ensure the well-being of the patient, operator and service personnel.
- All service safety information that is specific to Pre-Installation and Installation is detailed in the relevant manual, for example: transportation, storage and conveyance precautions are specified in the *Pre-Installation Manual*, while safety details that are relevant only to installation appear in the *Installation Manual*.
- The NM manuals do not cover CT-related safety in detail. All CT-related safety procedures, regulatory information and warnings are included in the CT Documents (provided separately).

Safety-related and general information is available in the manuals provided with the system as follows:

- ***Service Safety***
  - Spatial orientation
  - Service clearance
  - Service-related safety mechanisms and procedures
  - Service-related safety labels and labels on interior system components (under system covers)
  - EMC and service tools information
- **Information provided within the Operator Manual Set:**
  - ***Safety and Regulatory Information***
    - Intended use (including medical purpose, patient population and operator profile)
    - General safety warnings and instructions
    - Safety mechanisms and procedures
    - Operator and patient safety during clinical operation
    - Equipment and data safety

- ***System Description and Specifications***
  - Detailed system description
  - System specifications
  - Startup and shutdown procedures
- ***Quality Control Operations***
  - Tests and other QC procedures performed by the operator
  - Daily QC
  - Periodical tests and retuning
- ***Adhesive Labels and Rating Plates***
  - Labels on the exterior of system components

General

IMPORTANT
The images in this manual are for demonstration only. There may be minor differences that do not affect functionality.

Indications, Terminology and System Names

Indications

The following indications are relevant for all documents in the NM Service documentation.

- The images in this manual are for demonstration only. There may be minor differences that do not affect functionality.
- **General Terminology:**
  - **NM** is an abbreviation for **Nuclear Medicine**.
  - The terms **NM System**, **Gamma camera** and **Camera** are used interchangeably.
  - **SPECT** stands for Single Photon Emission Computed Tomography.
- **Hybrid/SPECT terminology:**
  - The term **Hybrid systems** indicates all systems with a CT subsystem
  - The terms **Hybrid** and **SPECT/CT** may be used to designate a combination of SPECT and CT imaging modalities.

- In the context of Hybrid SPECT/CT imaging, the term **NM** may refer to **SPECT**.
- In the context of CT imaging, the term **x-ray** is synonymous with **CT**.
- In the context of these systems, the term **Hybrid** refers to **Hybrid SPECT/CT Imaging**.

Different Console Configurations

- ***Common PC*** configuration: NM acquisition software and SmartConsole run on the same computer, with SLES 15 operating system.
- ***Standalone*** configuration: two separate computers, one for SmartConsole and one for NM acquisition software, with HELiOS 7.7 operating system.

Document Conventions

The following conventions are used throughout the manual:

IMPORTANT
Calls attention to important comments.

NOTE
Contains tips and general comments.

Description	Example
Keys on the operator keyboard or gantry control panels and the gantry	• Press **<SET>** / **<Ctrl>**
Software interface buttons	• Click **[OK]** / **[Apply]** / **[Cancel]**
Names of items in the graphical interface including:	
• Names of dialog boxes, windows, tabs, areas and lists • Menu items • Field and icon labels	• Access **Utilities** > **QC** > **Daily QC** tab, select **Utilities** • **Parameters** • **Properties** field
System messages	`Press Y to continue.`
System parameters whose actual values must be defined by the user	Type-in the `Patient ID`
Hyperlinks	See Figure 1 Sample Image on page 18
File names or paths	`root/opt/tacqdb/manuals`
References to other documents	*Safety Manual*

Description	Example
Sample Image	**Figure 1 Sample Image** 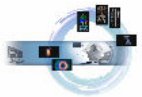

Chapter 1 General System Requirements

1.1 Objectives and Overview

This manual provides all information necessary to prepare the site for the installation of the system, taking into consideration the information required for different professionals such as architects, construction engineers, electrical contractors, and all other personnel involved in construction and preparation of the site.

IMPORTANT

Good site preparation is essential for smooth and efficient installation and for proper functioning of the system. Poor site planning may compromise system efficiency, operator efficiency, operator comfort, and/or patient comfort.

The information provided in this *Pre-Installation Manual* is general in its nature, and must always be used in conjunction with the drawings and specifications prepared specifically for your site.

If the site is considering a future system upgrade, use the pre-installation manual of the intended system type, during site planning. Special attention should be paid to room size, floor requirements, electrical power requirements, cable paths (ducts), and environmental requirements (air conditioning for heat dissipation).

When upgrading a system, the site's power, structure and floor loading requirements must be evaluated for upgrade suitability according to this manual.

1.2 Customer Responsibilities

It is the customer's responsibility to prepare the site in accordance with all the specifications provided in this manual, and in conjunction with the site-specific drawings. It is essential to verify all aspects of the site configuration before construction is started, as subsequent changes can be costly or impractical.

A detailed checklist is provided in Appendix A Customer Checklist on page 98. It is the customer's responsibility to ensure that all requirements in the checklist are fulfilled and the site conforms with all the specifications and requirements in this manual.

The customer is responsible for all aspects of site preparation, including, but not limited to, the following tasks:

- Assigning a project coordinator (see 1.2.2 Project Coordination on page 21)

- Planning and construction or renovations required for installation of the system, in accordance with the specifications included in this manual, including:
  - 2.2 Room Size, Layout and Considerations on page 39
  - Chapter 2 Equipment Description and General Construction Requirements on page 31
  - 3.1 Radiation Protection and Shielding Requirements on page 67
  - Chapter 4 Environmental HVAC Requirements on page 77
  - 5.1 Power Feed on page 82
  - Chapter 6 Network and GE Remote Access Requirements on page 96
- Complying with all national, state, or local regulatory requirements for the country in which the installation occurs, for example:
  - Fire control devices as required by local codes
  - Permits, inspections, radiation licensing etc.
  - Earthquake-related regulations
  - Local regulations for service clearance and egress
- Assuring regulatory compliance for the use of radioactive isotopes and preparation of the required isotopes (see 1.2.1 Using Radioactive Isotopes on page 20)
- Safe storage of the system and auxiliary equipment prior to and during installation
- Floor tile removal and replacement in area of gantry
- Ensuring adequate accessibility for all system components and auxiliary equipment to the site

1.2.1 Using Radioactive Isotopes

Since the system involves the use of radioactive isotopes, compliance with Nuclear Regulatory Commission regulations, or similar regulatory requirements (depending on the country), must be adhered to and all permissions obtained well in advance. It is recommended that regulatory compliance is arranged early in the site planning process.

It is essential that all preparations are completed so that required source materials can be obtained prior to installation, including calibration sources. Take into consideration that these sources may have fairly long delivery lead times, yet may also have a short half life, so that it may not be advisable to store them for long periods of time.

The site must provide a list of isotopes in order to coordinate the calibrations plan prior to installation.

A custom-made Co^{57} line source must be pre-ordered and available on site prior to the system installation. Special documentation is required for the delivery of this source. Processing of this documentation should be done early to ensure that installation can be performed without delays.

The following ECATs should be ordered:

- E8690AG – Co^{57} line source and an encapsulating plastic tube
- E8690AH – Lead shielded storage case for Co^{57} line source and QC holding jig. As an alternative to E8690AG, Co^{57} line source can be purchased directly from Radqual / international isotopes https://radqual.com / https://intisoid.com, Manufacturer Catalog **BM83-SG-10**.

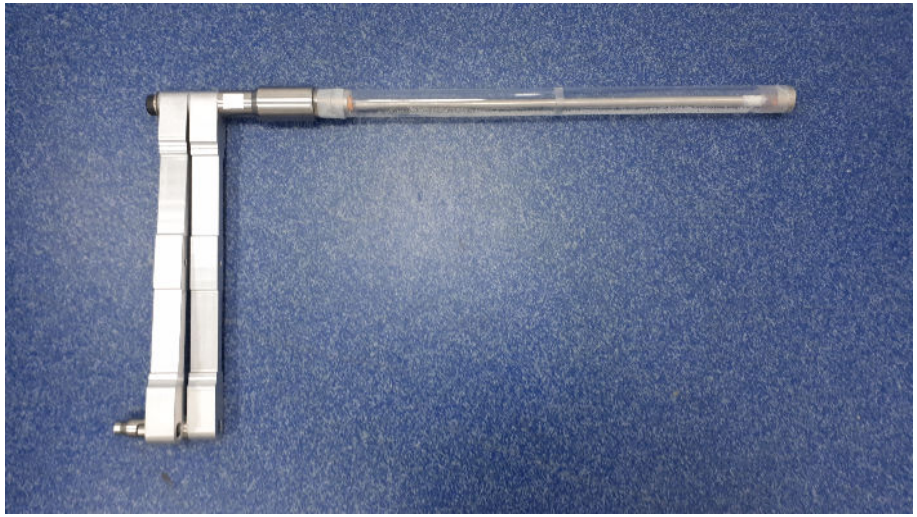

1.2.2 Project Coordination

The site project coordinator is the primary contact and liaison between GE and all site-related functions, including the purchaser, the construction planners, architects and contractors, and other site administrative personnel.

To ensure a successful installation, it recommended that the site nominates a single site project coordinator, preferably a person familiar with similar medical construction projects, manages the entire project. Ideally, the project coordinator is involved in every phase from pre-installation and installation, from conceptual planning through to system start up, working closely with GE to ensure that the client upholds all requirements in this *Pre-Installation Manual*.

At the end of site preparation, the site project coordinator must verify that:

- The latest **Global Site Readiness Checklist** is being used (available via “GLOBAL HPM LINKS”)

- The checklist has been completed and submitted prior to equipment delivery

1.3 Delivery Requirements

The system is packed for shipment with the minimum number of component packages.

⚠ CAUTION

DAMAGE TO EQUIPMENT

The system components are sensitive to excessive mishandling, including dropping, shock, vibration, tipping or hoisting. Vibration damage to components may not be evident until after system installation is complete.

The system components must **never** be dropped. A drop from a height greater than 1 cm (½") may induce structural damage to the frame or other major components.

To avoid damage to sensitive components, dock-to-dock shipment is recommended. Other methods are acceptable, provided the system is not dropped or otherwise mishandled.

1.3.1 Temperature Precautions During Transportation and Delivery

⚠ CAUTION

DAMAGE TO DETECTORS

- The CZT detectors in the NM gantry are sensitive to temperature gradients (sudden changes in temperature).
- The NM gantry must be stored inside the hospital in a controlled environment that complies with the environmental requirements detailed in 1.4 Product Storage and Handling Requirements on page 30.

NOTE

- **NM subsystem**: The NM gantry is shipped separately via Pharma shipment, in a controlled environment. See Table 1-3 Storage and Shipping Conditions on page 30 for details.

  The Pharma shipment is usually a door-to-door shipment. The GE PMI must ensure that dollies are available on site for the NM & CT gantries (especially if the optional dollies are not included in the order). Both gantries use the same optional dollies.
- **CT subsystem**: Refer to the *CT Pre-Installation Manual* for additional information related to the CT sub-system.

1.3.2 Delivery Unloading Area and Equipment

- The minimal unload area adjacent to the delivery truck is 15m×15m (50'×50'). Make sure that the unloading and storage areas are large enough to maneuver a forklift with crates.
- It is recommended to select the delivery site so as to provide the shortest and smoothest route for component conveyance:
  - If delivered on the installation day, as close as possible to the scan room for installation
  - If delivered prior to the installation day, as close as possible to the storage area
- If a forklift is required in order to unload or move system components:
  - Allocate a forklift capable of lifting more than the maximum weight of the heaviest unit, see **Components and Clearance**: 1.3.4 Crated and Uncrated Weights, Measurements and Clearance on page 25
  - Take into account sufficient floor space to maneuver the forklift near the delivery truck.

1.3.3 Conveyance of Crated System Components Within the Site

Regardless of whether the system is being delivered from the unloading area to storage, from the unloading area to unpacking area for installation or from storage to the installation area, take care to adhere to the following guidelines:

- Ensure that there is a free path, including an elevator if necessary, to wheel the components to the installation area.
- Verify that the route selected has sufficient clearance and load carrying capacity.

  See Table 1-1 Components and Clearance on page 25 and Table 1-2 Additional CT-specific Components and Clearance on page 26
- The subsystems may be lifted only with a forklift and only when attached to their original shipping pallets.

⚠ CAUTION

DAMAGE TO SYSTEM COMPONENTS

Lifting of the gantry without its original shipping pallet or using a crane may damage the system and is prohibited.

- If the outer crating is removed after delivery, do not detach the subsystems from their original shipping pallets before they are conveyed to the scan room for installation.
- The center of gravity of each item, including lifting height and position, is marked on the subsystem crate. When conveying the subsystems within the site, and particularly if there are slopes in the delivery path, make sure to take the center of gravity into account.

- Always lower system components at the slowest reasonable rate.
- If the system components are to be transferred from an unloading site outside the building, special facilities must be provided to ensure smooth conveyance.
- Uneven temporary ramps may cause vibrations that could damage some components.
- System components may be moved via flat-bed tow truck or by rolling them across **smooth** sidewalks or other paved surfaces.
- When moving the gantry off a flat-bed tow truck, attach the straps to the lowest point possible on the dolly.

1.3.3.1 Rigging Limitations

Do not lift the gantry assemblies by their dollies. Do not transport the gantry assemblies across any surface by any means other than the dollies provided by GE. The assemblies have no lifting points and are not designed to be lifted by any special rigging attached to the gantry assemblies themselves.

DANGER

POSSIBLE SEVERE PERSONAL INJURY OR DEATH

The dollies are not designed to be used as an attachment point for any method of lifting the subsystems.

Attaching lifting straps, cables or mechanisms to the dolly handles or any other part of the dolly is strictly prohibited.

NOTE
If it is determined that the subsystems must be lifted by crane or other lifting method the PM or person responsible for local siting of the system shall NOT proceed with the installation without consulting directly with GE Engineering.

Lifting the subsystems by crane or other lifting method should always be avoided. All alternate methods of delivery should be evaluated including the removal of any obstructions, doorways, walls, and windows.

If lifting is still required:

- The entire gantry assembly and both gantry transport side dollies must be placed on a lifting platform. GE does not provide a lifting platform.
- The entire patient table must be lifted while sitting on a lifting platform. The patient table shall be lowered to its transport position so the table base is in contact with the platform.

- The platform must be designed so no lifting straps or cables come in contact with any part of the gantry or table subsystems or its side dollies.
- The lifting platform shall bear the entire load. No part of the subsystem shall bear any load during the lift.

1.3.4 Crated and Uncrated Weights, Measurements and Clearance

The following tables provide you with crate and component measurements, weights and other data, in order to assist you in planning conveyance routes and storage areas. The order of the components in the list constitutes the recommended order of conveyance and delivery to the scan room for installation.

Table 1-1 Components and Clearance

	Crated		Uncrated					
Component name	**Crate size (cm) (without dollies) (H×W×L)**	**Weight (kg)**	**Minimal dimensions (cm)**					**Weight (kg)**
			Door width	**Corridor / elevator width**	**Corridor / elevator length**	**Width of corridors w.90° turns**	**Height**	
			*1			*2		
Pre-Installation Kit*3	75×40×175	15	any	any	any	any	any	15
NM gantry with dollies	237×155×230	1500	96	96	220*4	235	195*5	1700*6
Table	140×90×300	785	100	100	280.9	250	any	557
NM Acquisition station	80×60×60	30	any	any	any	any	any	<20
SmartConsole (if applicable)	80×60×60	30	any	any	any	any	any	<20
Image Generator	80×60×60	30	any	any	any	any	any	<23.7
Peripherals and accessories	115×100×150	50	any	any	any	any	any	50
CT gantry, including dollies and side rail	231×137×200	2111	115	115	281	250	200*7	2041
NM/CT covers	125×228×206	400	any	any	any	any	any	95
Optional Items								
• ECG Trigger Monitor • Xeleris • Monitors	May vary but not more than 80×80×80	May vary but not more than 15	any	any	any	any	any	<13

Table 1-1 Components and Clearance (Table continued)

	Crated		Uncrated					
Component name	**Crate size (cm) (without dollies) (H×W×L)**	**Weight (kg)**	**Minimal dimensions (cm)**					**Weight (kg)**
			Door width	**Corridor / elevator width**	**Corridor / elevator length**	**Width of corridors w.90° turns**	**Height**	

*1 The minimum door width required in order to bring the system components into the scan room also depends on the width of the corridor leading to the room. When planning or measuring the width of the scan room door, use the graphs provided in Figure 1-2 Door Opening vs Corridor Width for 90° Turn of NM Sub-system on page 29 in order to verify that the measurements comply with the requirements.

*2 The corridor width required in order to move the system components from the unloading area to the scan room depends on the angles of turns on the corridor. For the required width when the angle is 90°, see Figure 1-2 Door Opening vs Corridor Width for 90° Turn of NM Sub-system on page 29.

*3 May be delivered a few days prior to system delivery, as part of the final room check and preparation for installation.

*4 with small casters installed

*5 10 mm clearance above the floor

*6 Weight of gantry: 1350 + 350

*7 CT gantry height with covers off and dollies off is 185 cm

Table 1-2 Additional CT-specific Components and Clearance

	Crated		Uncrated					
Component name	**Crate size (cm) (without dollies) (H×W×L)**	**Weight (kg)**	**Minimal dimensions (cm)**					**Weight (kg)**
			Door width	**Corridor / elevator width**	**Corridor / elevator length**	**Width of corridors with 90° turns**	**Height**	
			*1			*2		
CT PDU	123×90×70	460	100	100	100	100	any	370
CT console (Open OC16)	65×47×83	May vary, but not more than 115	any	any	any	any	any	May vary, but not more than 88
CT accessories	115×100×150	50	100	110	150	180	any	50
CT sub-system covers	190×100×170	537	80	80	100	128	199	30
MDP (Main Disconnect Panel)*3 *4	100×70×50	60	any	any	any	any	any	45
Optional Items								

Table 1-2 Additional CT-specific Components and Clearance (Table continued)

	Crated		Uncrated					
Component name	**Crate size (cm) (without dollies) (H×W×L)**	**Weight (kg)**	**Minimal dimensions (cm)**					**Weight (kg)**
			Door width	**Corridor / elevator width**	**Corridor / elevator length**	**Width of corridors with 90° turns**	**Height**	
UPS		299	any	any	any	any	any	276.5
Contrast Injector	May vary but not more than 80×80×80	May vary but not more than 15	any	any	any	any	any	<13
AW Workstation								

*1 The minimum door width required in order to bring the system components into the scan room also depends on the width of the corridor leading to the room. In order to verify that the measurements comply with the requirements, when planning or measuring the width of the scan room door, review the graphs in Figure 1-2 Door Opening vs Corridor Width for 90° Turn of NM Sub-system on page 29.

*2 The corridor width required in order to move the system components from the unloading area to the scan room depends on the angles of turns on the corridor. For the required width when the angle is 90°, see Figure 1-2 Door Opening vs Corridor Width for 90° Turn of NM Sub-system on page 29 .

*3 A1 or other; if ordered from GE, delivered in advance as part of the site preparation and must be installed prior to system installation

*4 In some cases, an alternative MDP is supplied, in order to comply with local electricity standards, see 5.6.1 MDP (A1) on page 91.

The following figures provide you with crate and component measurements, weights and other data, in order to assist you in planning conveyance routes and storage areas.

Figure 1-1 NM Gantry on Dolly Measurements

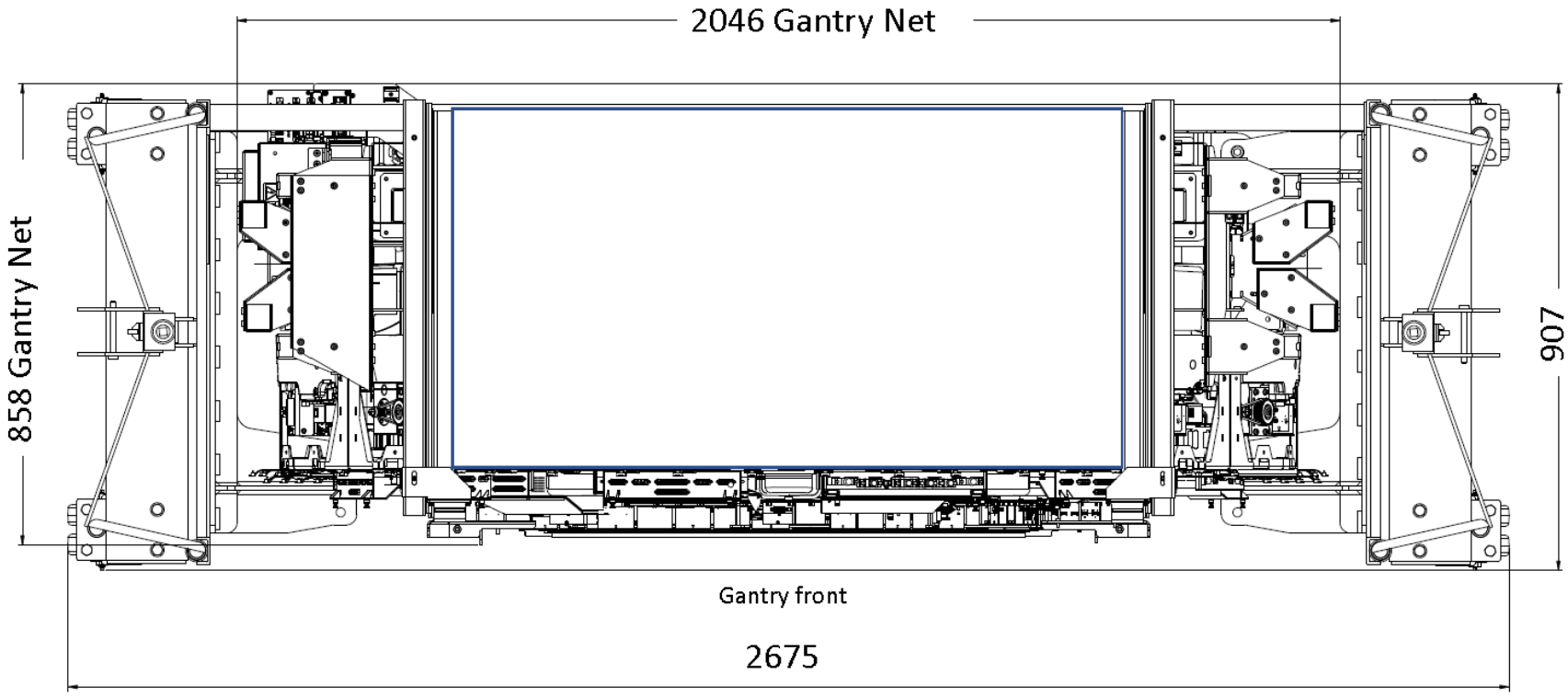

NOTE
Measurements are in mm

Figure 1-2 Door Opening vs Corridor Width for 90° Turn of NM Sub-system

X=Corridor OUT width / Y=Required door opening

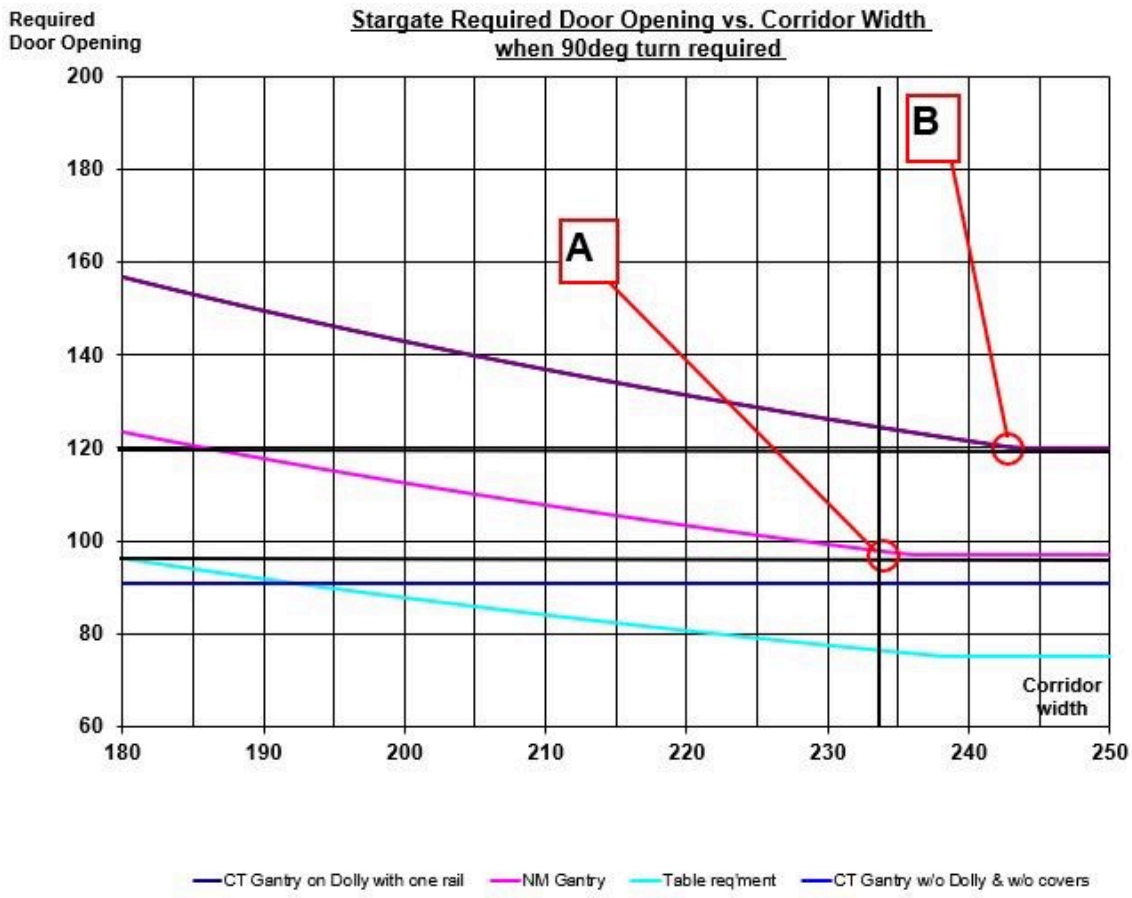

Legend

A: Minimum door opening required to convey sub-systems into the room from corridor when 90deg turn is required (NM Gantry)

B: Minimum door opening required to convey sub-systems into the room from corridor when 90deg turn is required (CT Gantry with one rail)

1.4 Product Storage and Handling Requirements

NM subsystem

The NM gantry is shipped, with the detectors assembled, via Pharma shipment, in a controlled environment.

Table 1-3 Storage and Shipping Conditions

Conditions	Sub-System	Shipping/Storage Environmental Conditions*1
Temperature	NM	5°C to 50°C
	CT	-20°C to 70°C
Relative humidity (non-condensing)	NM	30% to 70%
	CT	20% to 95%
Altitude: atmospheric pressure	NM	70kPa to 106kPa
	CT	50kPa to 106kPa
*1 These conditions are applicable only for short-term storage up to six months		

All components must be stored in their original crating.

IMPORTANT

The conveyance path from the unloading are to the temperature-controlled area must be wide enough to allow passage of the NM gantry in the original crating.

The NM gantry must be transported in its original crating, which is designed to provide good mechanical stabilization as well as a certain amount of thermal insulation.

- As soon as the NM gantry is unloaded from the transportation vehicles, it must be moved to a temperature-controlled area while still in its original container, until it is ready to be installed.
- If the temperature in the storage or installation areas differs from that of the delivery route and/or ambient temperature, a stabilization period of 1 hour per 3°C (5.4°F) difference must be allowed.

CT subsystem

Refer to the *CT Pre-Installation Manual* for additional information related to the CT sub-system.

Chapter 2 Equipment Description and General Construction Requirements

This chapter provides the following:

- 2.1 Equipment and System Components on page 31

  Describes the system and its components.

- 2.2 Room Size, Layout and Considerations on page 39

  Provides guidelines for determining the size and layout of the scan and operator rooms and of the above components, including example layouts of typical rooms, illustrating the position and dimensions of the components.

- 2.3 Room Structural Requirements on page 46

  Provides floor, ceiling and wall requirements, and acoustic and vibration specifications for the scan room and (if applicable) the operator room.

- 2.4 Seismic Requirements on page 65

  Provides center of gravity information for the different system components.

2.1 Equipment and System Components

The system is an NM and CT hybrid system, comprised of an NM camera and a CT scanner. The following figures illustrate the different system components:

- Scan Room Fixed Components – Figure 2-1 Scan Room Fixed Components on page 32
- Scan Room Moving Components - Figure 2-2 Scan Room Moving Components on page 33
- Operator Room Components - Figure 2-3 Operator Room Components on page 34
- Gantry - Figure 2-4 Gantry on page 35
- Table Views - Figure 2-5 Table Views on page 36
- CT Power Distribution Unit (PDU) - Figure 2-6 CT Power Distribution Unit (PDU) on page 37
- CT OpenOC16 Console - Figure 2-7 CT Open Console on page 38

Figure 2-1 Scan Room Fixed Components

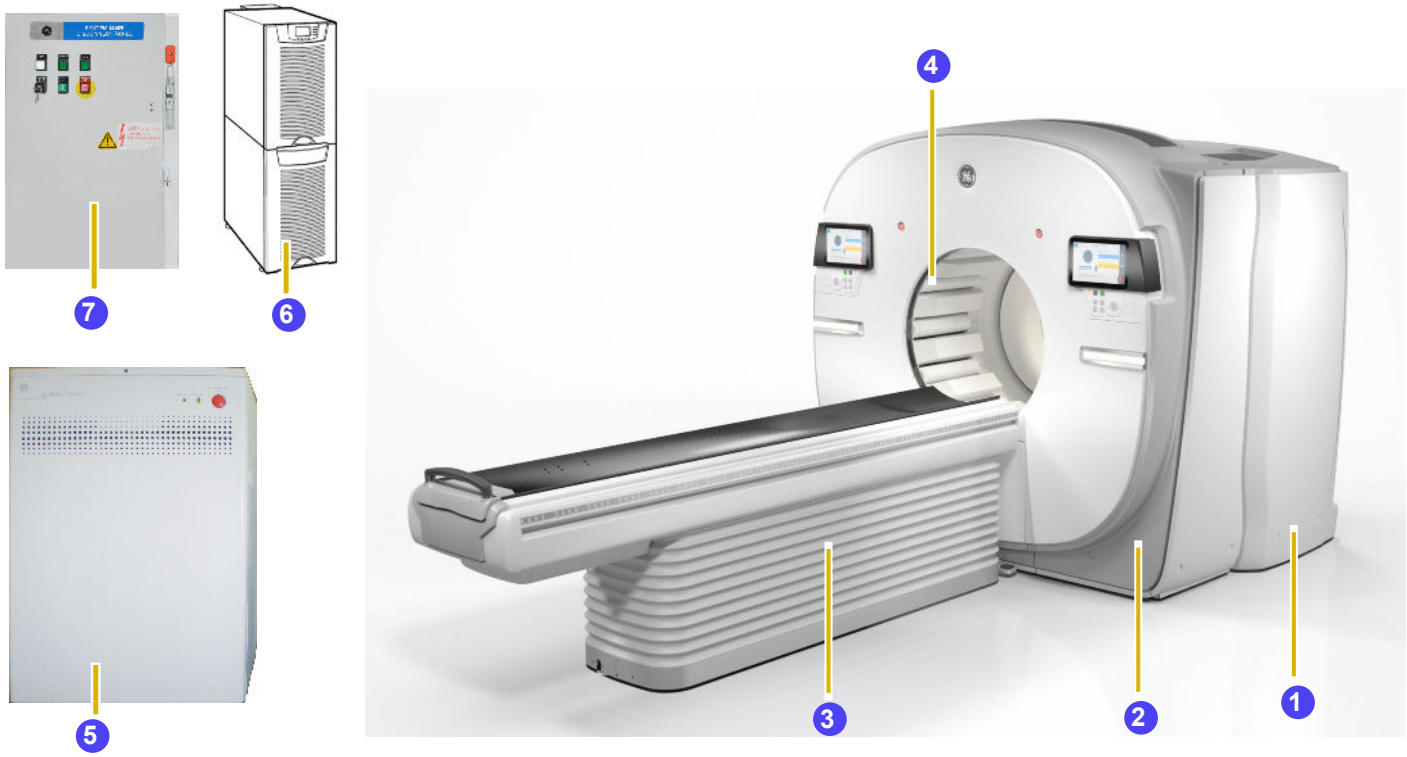

Legend

(1) CT gantry (see Figure 2-4 Gantry on page 35)	(5) CT PDU (see Figure 2-6 CT Power Distribution Unit (PDU) on page 37)
(2) NM gantry (see Figure 2-4 Gantry on page 35)	(6) UPS (optional)
(3) Patient table (see Figure 2-5 Table Views on page 36)	(7) Main Disconnect Panel (MDP)
(4) NM detectors	

Figure 2-2 Scan Room Moving Components

Legend

(1) ECG trigger monitor
(2) Head holder extender (optional)
(3) Contrast injector

Figure 2-3 Operator Room Components

Legend

(1) Xeleris workstation (without desk); can be located in a remote location such as a reading room.	(5) NM console
(2) Console screens and keyboards. Desk is for illustration only	(6) CT console
(3) AW workstation (optional, without desk)	(7) Image Generation (IG) console
(4) SmartConsole (if applicable; without desk)	

Figure 2-4 Gantry

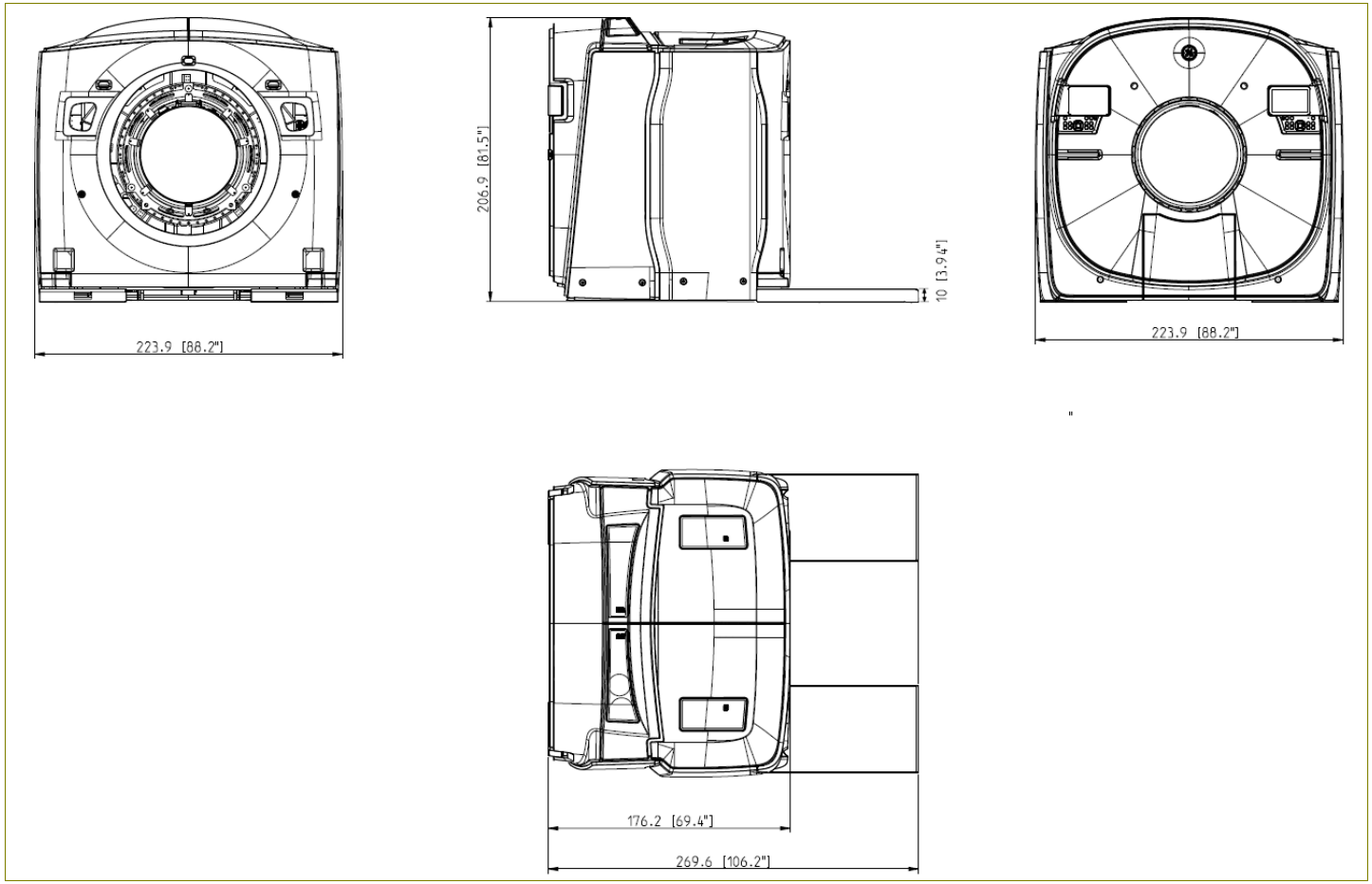

Figure 2-5 Table Views

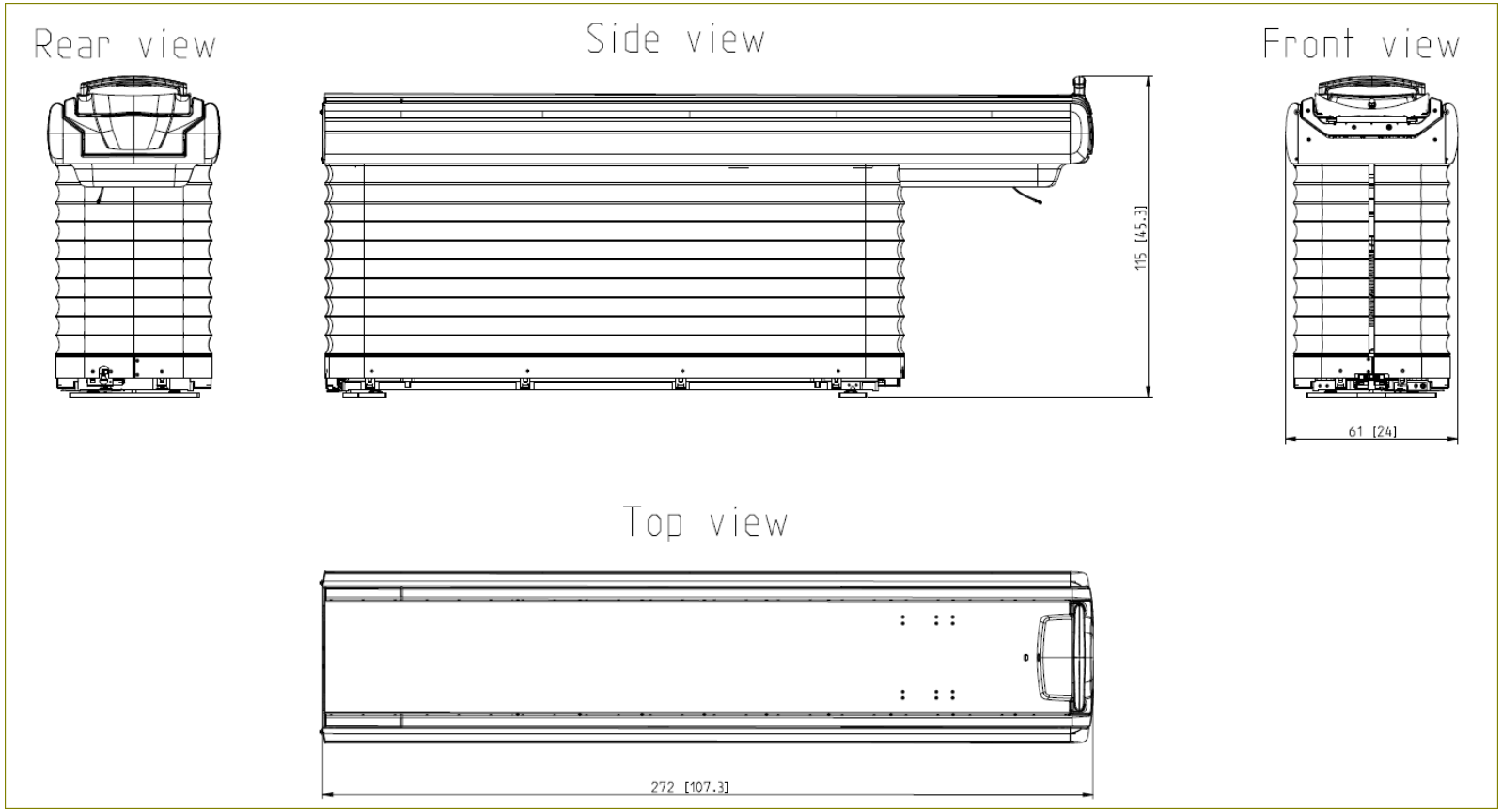

Figure 2-6 CT Power Distribution Unit (PDU)

Dimensions are in inches (millimeters)

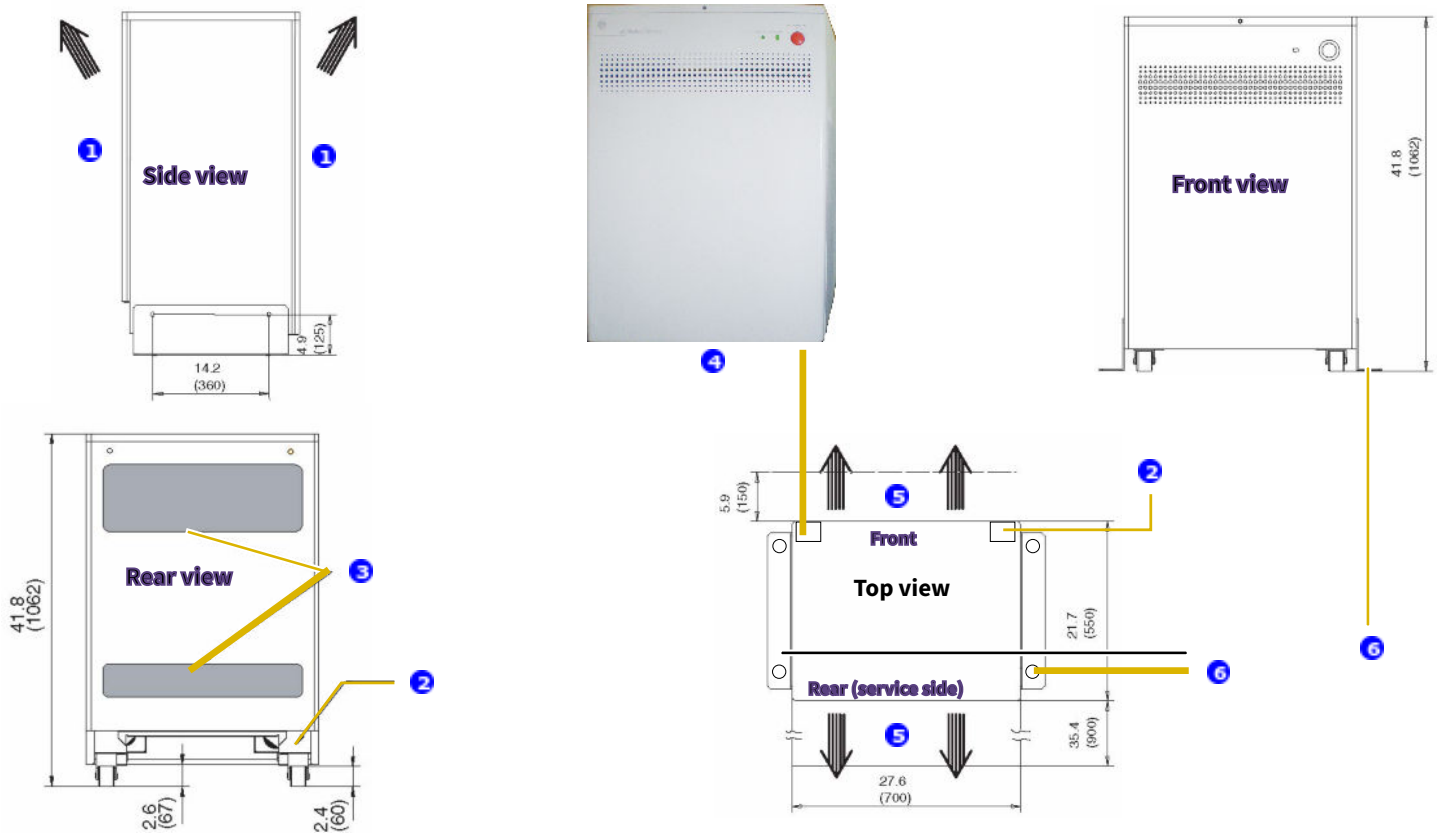

Legend

(1) Air Flow	(4) I/O connections panel
(2) AC power input box	(5) Minimum air flow clearance
(3) Air flow vents (convection)	(6) Seismic mounting brackets (4 holes)

Figure 2-7 CT Open Console

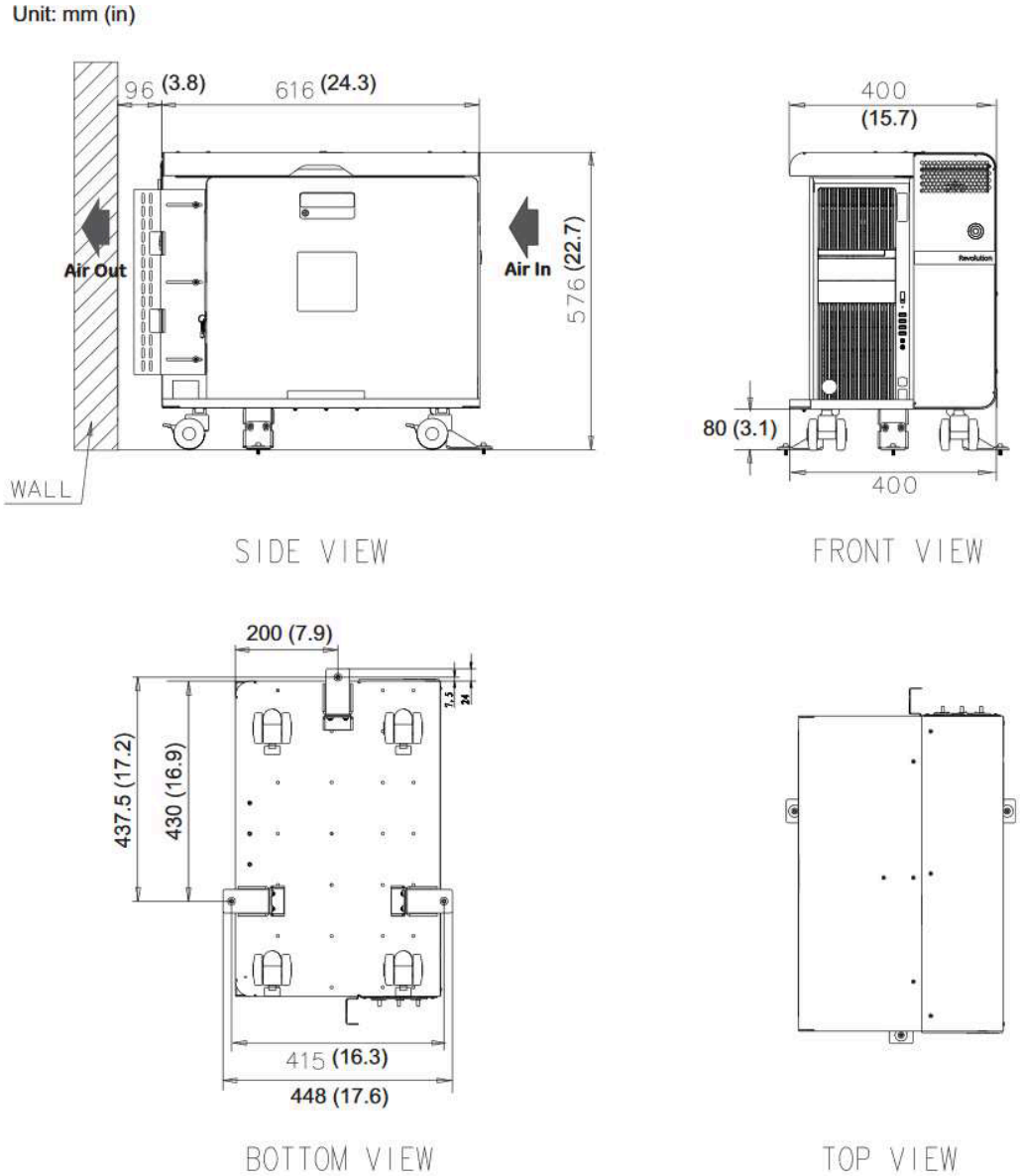

2.2 Room Size, Layout and Considerations

The system requires a main Scan Room and a separate adjoining Operator Room, which contain the following sub-systems:

Table 2-1 Components in Scan and Console Rooms

Scan Room		**Operator Room** (see Figure 2-3 Operator Room Components on page 34)	**Variable location**
Fixed Components (see Figure 2-1 Scan Room Fixed Components on page 32)	**Moving Components** (see Figure 2-2 Scan Room Moving Components on page 33)		
NM gantry	Contrast injector	NM acquisition station	Storage cabinet (not supplied with the system)
Patient table	ECG trigger monitor	Xeleris workstation (optional)	
CT gantry		FWS table (optional, not supplied with the system)	
UPS (optional)*1		Operator chair	
CT PDU		CT console	
MDP		AW workstation (optional)	
EMO (wall mounted)		SmartConsole workstation (if applicable)	
		Image Generation (IG) acquisition station	

*1 When a full-load UPS is used, it is recommended to install the UPS in an isolated room as the UPS adds to noise and heat dissipation levels. This should be coordinated with GE and taken into consideration when planning the room size.

This section provides guidelines for determining the size and layout of the scan and operator rooms and of the above components, and example layouts of typical rooms, illustrating the position and dimensions of the components.

The room layouts provided take into consideration all aspects of operation, operator and patient requirements and service clearance requirements.

Egress

The room layouts, diagrams and dimensions in this manual provide the required clearances for proper equipment operation and service only. The customer/purchaser is responsible for compliance with federal, state and/or local codes regarding facility egress and related facility requirements (see Appendix D Regulatory Clearances on page 118).

2.2.1 Room Dimension Requirements

NOTE

The minimal and standard system layouts described in this manual may not comply with specific local/regional/country/state requirements (such as OSHA in the USA).

Take into consideration the local regulations in force when planning room dimensions and layout (see Appendix D Regulatory Clearances on page 118).

Minimal scan room size, without operator room (L × W × H)

1.85 m CT Scan range: 6.12 m×3.58 m×2.3 m (20.1'×11.9' ×7.5')

1.6 m CT Scan range: 5.87 m×3.58 m×2.3 m (19.25'×11.9' ×7.5')

2.2.2 System Layout Drawings

This section provides typical sample layouts, illustrating the position and dimensions of the scan/operator room and the system components.

The room layout dimensions take into consideration all aspects of operation, operator and patient requirements and service clearance requirements (see 2.2.3 Layout Considerations on page 44).

Sufficient regulatory and service clearances must be maintained around the equipment for full operation, service, and safety.
In addition, a system footprint is provided to facilitate site planning. This illustration does not contain information regarding service clearance areas around the system.

Figure 2-8 Minimal scan room size - 1.85m CT Scan range

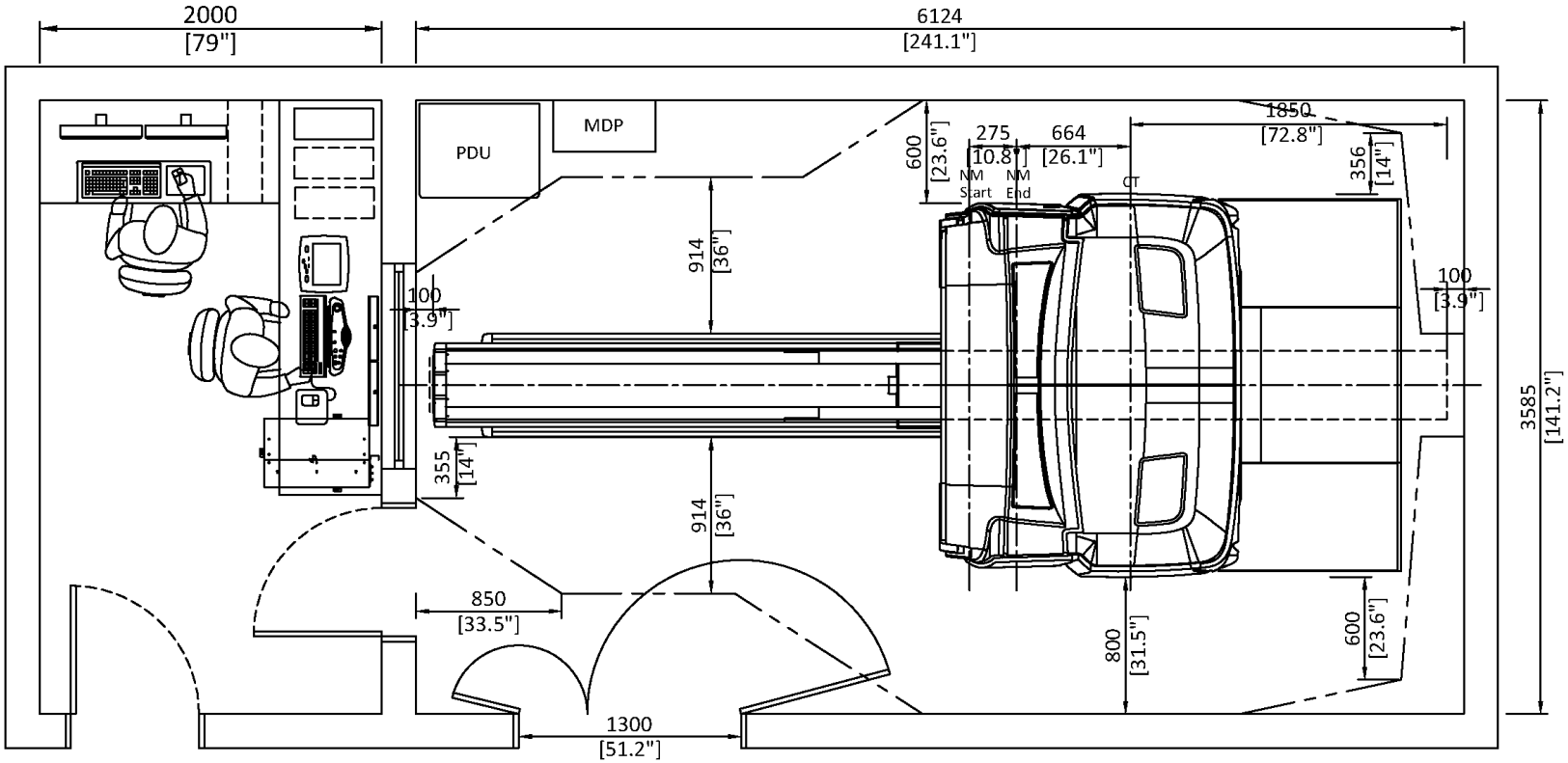

NOTE

- Dimensions are in mm [in].
- Defines the minimum area required to enable installation, operation and service of the system in safe conditions.
- Does not take into account local requirements. If local requirements are stricter, they should be followed.
- Operator movement around the system is limited.
- Table extender cannot be used.

Figure 2-9 Minimal scan room size - 1.6m CT Scan range

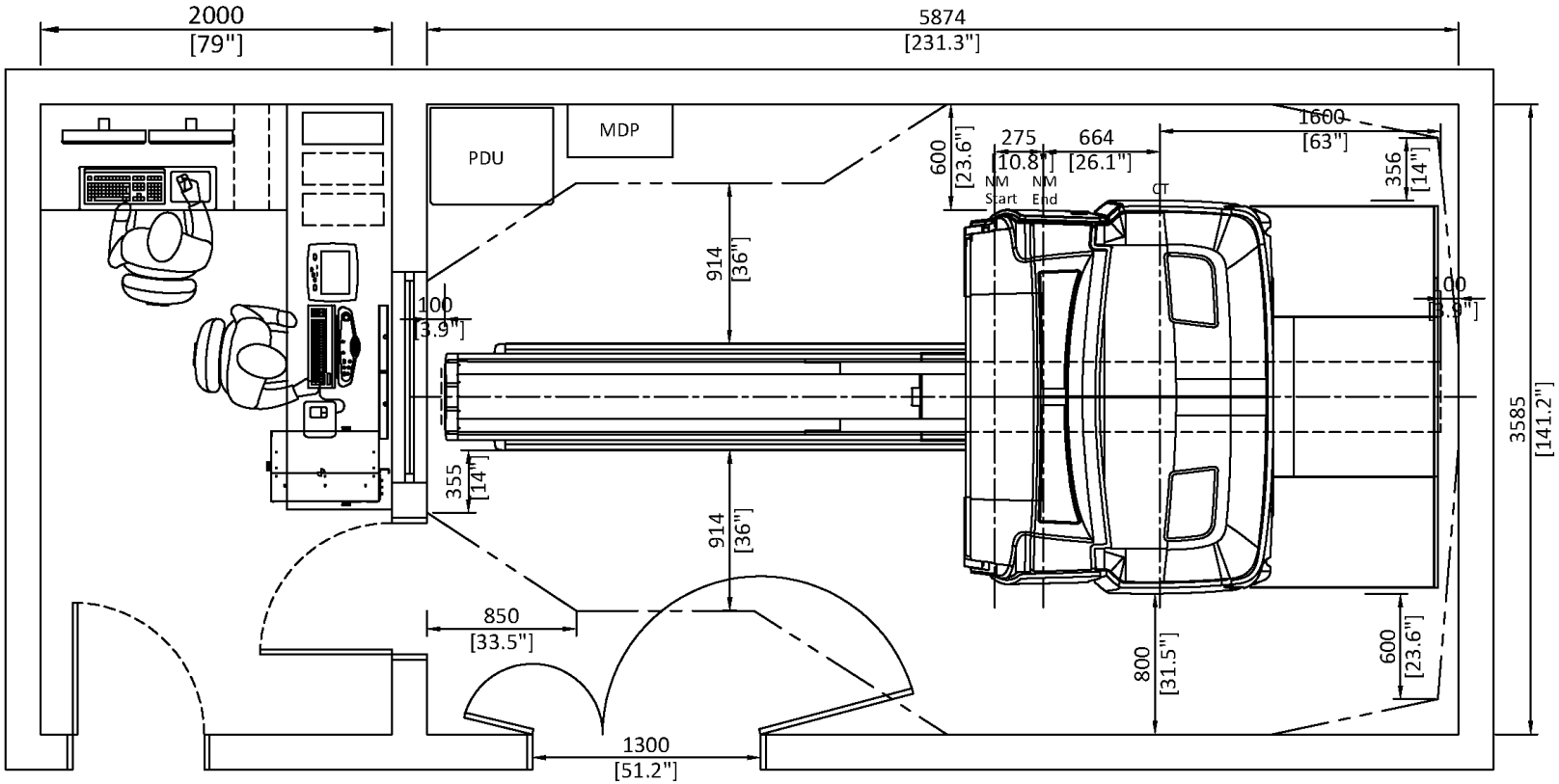

NOTE

- Dimensions are in mm [in].
- Scan length is limited to 1.6 m (63").
- Defines the minimum area required to enable installation, operation and service of the system in safe conditions.
- Does not take into account local requirements. If local requirements are stricter, they should be followed.
- Operator movement around the system is limited.
- Table extender cannot be used.

Figure 2-10 Example of Room Layout

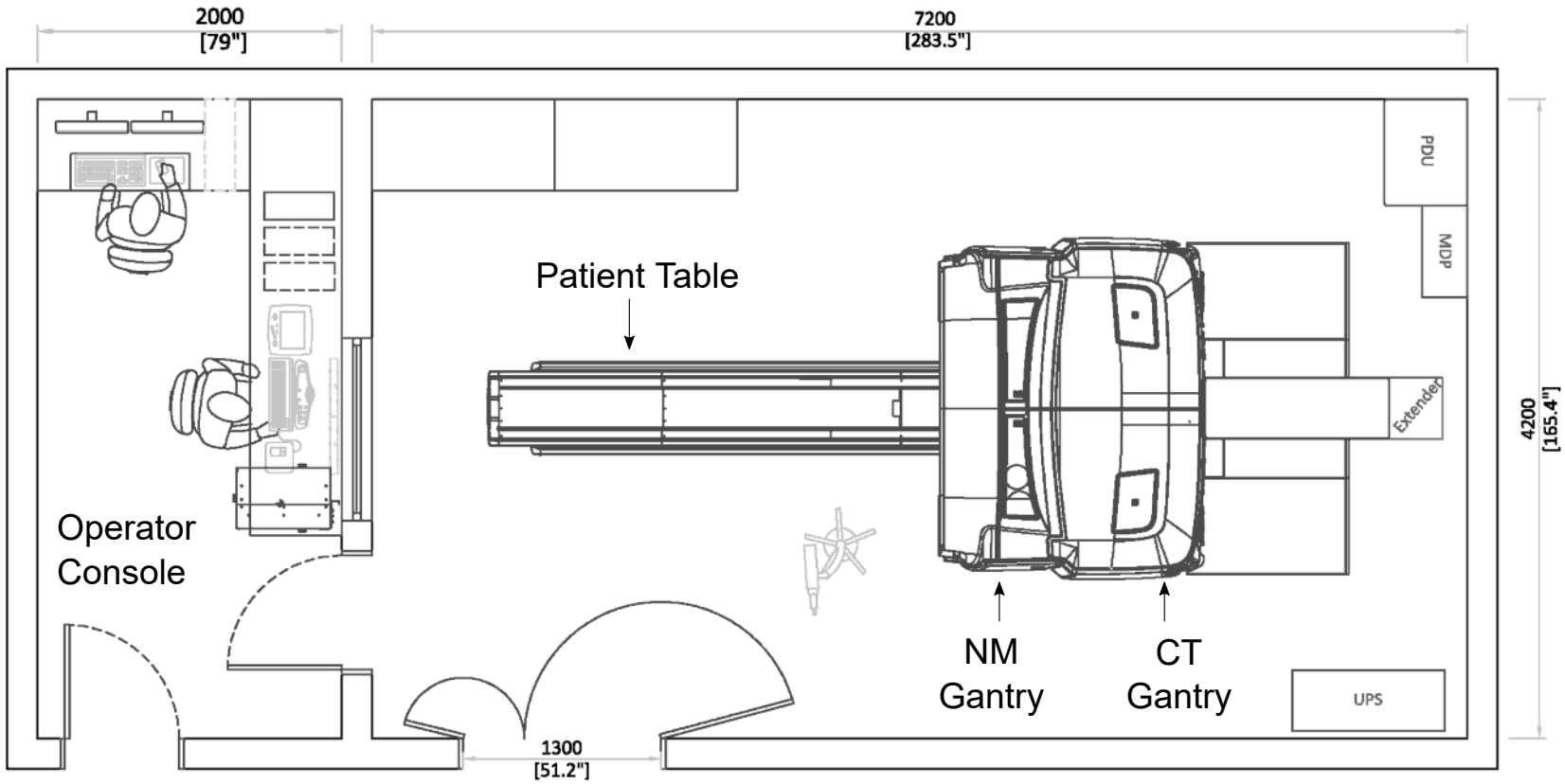

NOTE

- Dimensions are in mm [in].
- Table can be fully extended.
- Leg extender is supported.
- Does not take into account local requirements. If local requirements are stricter, they should be followed.
- Radiation shielding regulations differ from one country or state to another. It is the customer's responsibility to ensure that radiation protection and shielding comply with such regulations and requirements during site preparation, system installation, operation and service.

2.2.3 Layout Considerations

This section describes the considerations you must take into account when selecting a site and planning the room size and layout. In addition, it is the responsibility of the customer to ensure that all aspects of the scan and operator rooms conform with the local requirements.

Room Dimensions and System Placement

The room size and shape and the placement of the system components must enable optimal functional and working conditions, including the best possible relative positioning of the gantry and of the acquisition console in operator room, including:

- **Operator access in scan room**, around the gantry in order to:
  - Assist patient positioning
  - Perform examination routines
  - Act efficiently and quickly in case of an emergency, including easy access to emergency switch
- **Upgrade considerations:**
  - If a system upgrade is planned or possible, the requirements for the larger system should be assessed to avoid unnecessary future rework:
    - Room dimensions
    - Power requirements
    - HVAC requirements
    - Floor loading requirements
- **Safety zone considerations**

  The safety zone is designated by tape on the floor, usually yellow (can also be differentiated by a change in floor coloring). This designates the area that must be free of obstructions to avoid a collision during automatic motion.

Figure 2-11 Safety Zone Marking

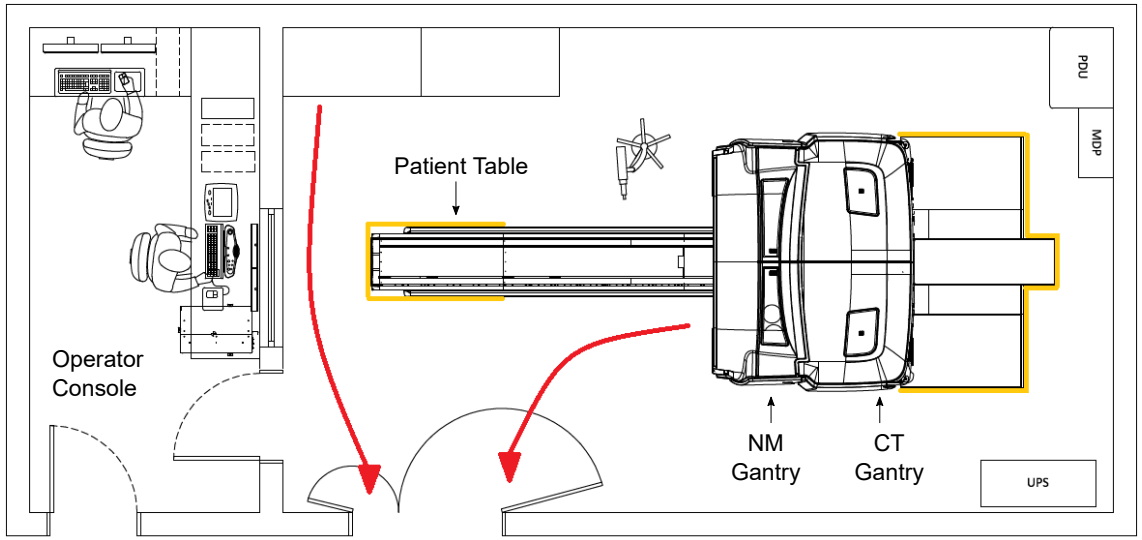

- **Operation-related considerations**:
  - Enable access for hospital beds, including maneuvering and positioning the bed.
  - ECG Trigger Monitor and Contrast Injector– cable position and lengths and storage when not in use
  - Space for storage and usage of ECG Trigger Monitor and Contrast Injector
  - Installation and service considerations:
    - Location of power connections
    - Access to communication lines (Ethernet, external hardcopy device)
    - Floor loading capacity and weight of system components, including storage
    - Service clearance areas (see Appendix D Regulatory Clearances on page 118)
    - Storage cabinet for storage of operator and service tools (optional). Depending on the room layout, it is recommended that sufficient area is allocated for a cabinet.
- **Operator room**

- Operator field of view, enabling direct view of patient in bore, or taking into consideration viewing via remote closed-circuit camera in the scan room and screen in the operator room
- Radiation shielding, electromagnetic shielding, etc.
- Space, power and network connections for additional equipment such as PACS workstation, archiving devices, etc.

- **Proximity of scan room to other utilities**
  - Avoid detrimental influences from surrounding rooms and activities, such as:
    - Radioactive or magnetic sources
    - A local wireless environment
    - Vibrations
    - Transformers from elevators, compressors, or other high power devices.
  - Plan the optimal proximity of the scan room to related utilities. In addition to patient comfort, take into consideration that background radiation activity from such utilities could negatively affect image quality and system calibration. These utilities include:
    - Waiting/injection areas, toilets
    - Viewing and processing rooms
    - Radionuclide storage and preparation area
    - Office facilities
    - Smoke detectors that use/have radioactive activity

2.3 Room Structural Requirements

Room requirements consist of the following:

- 2.3.1 Floor Requirements on page 47, including floor strength, anchoring, levelness and flatness, vibration and conductivity
- 2.3.1.2 Floor Loading Requirements on page 47
- 2.3.2 Ceiling Requirements on page 63
- 2.3.3 Wall Requirements on page 63
- 2.3.4 Acoustic Specifications on page 63
- 2.3.5 Vibration Specifications on page 64

2.3.1 Floor Requirements

IMPORTANT
It is the customer's responsibility to have appropriate tests performed and to obtain a construction engineer's assessment of the floor's suitability to meet the requirements of this section.

2.3.1.1 Floor Strength

In order to enable system mounting using the supplied floor anchors, concrete floors must have a minimum cube strength of f'c = 4350 psi (30 MPa) at 28 days (curing time) for 25/30 concrete.

NOTE

- Concrete strength is determined by the "Cylinder Test" (used in the USA) or "Cube Test" (used in Europe), where a cylinder or cube of concrete is cast, cured for the appropriate time and then compressed between two parallel faces until failure. The stress at the failure is taken to be the compressive strength of the concrete. The 25/30 concrete required for the system installation is concrete with a strength of 25 in the cylinder test (resulting 3625 psi), or strength of 30 in the cube test (resulting 4350 psi).
- If the system is expected to be upgraded in the future, the floor strength requirements for the larger model should be used.

It is the customer's responsibility to have appropriate tests performed to determine and measure concrete strength, and to obtain a construction engineer's assessment of the floor load capability.

2.3.1.2 Floor Loading Requirements

Table 2-2 Weight of Components

Component	Weight (kg)	Weight (lb)	Load Distribution	Comments
NM gantry	1350	2866	4 pads, Ø90 mm each: • 300 kg each on front pads • 375 kg each on rear pads	
Patient table (without patient)	557	1228	2 floor plates anchored to floor	Weight of table without patient
Storage cabinet, including tools (optional)	< 130	< 287	4 legs	
CT gantry	1890	4166		
CT PDU	370	815	4 wheels; anchored to floor	
CT console	65.1	143	4 wheels	

Table 2-2 Weight of Components (Table continued)

Component	Weight (kg)	Weight (lb)	Load Distribution	Comments
AW workstation (option)	30	66	Placed on desk	
NM console	11.25	25		
ECG Trigger Monitor, Operator chair, Contrast Injector	(insignificant)	(insignificant)		
Personnel and patient	< 500	< 1102	Variable	Normally 3-4 people in room during scan/service operations
UPS (optional)	281	619	4 wheels; anchored to floor	
Xeleris workstation	11.25	25		
SmartConsole (if applicable)	11.25	25		
Image Generator console	22.4	49.4		

⚠ CAUTION

ENSURE CORRECT FLOOR AND ANCHORING

If the system is installed on a floor type thinner than a 166 mm (6.5") concrete floor, the customer shall, at their expense, provide acceptable anchoring and mounting methods that meet all structural specifications provided in 2.3.1.2 Floor Loading Requirements on page 47 and 2.3.1.3 Floor Anchoring on page 56.

Figure 2-12 NM Gantry Center of Gravity Points

NM gantry CoG weight: 1275 Kg (2811 Lb.)

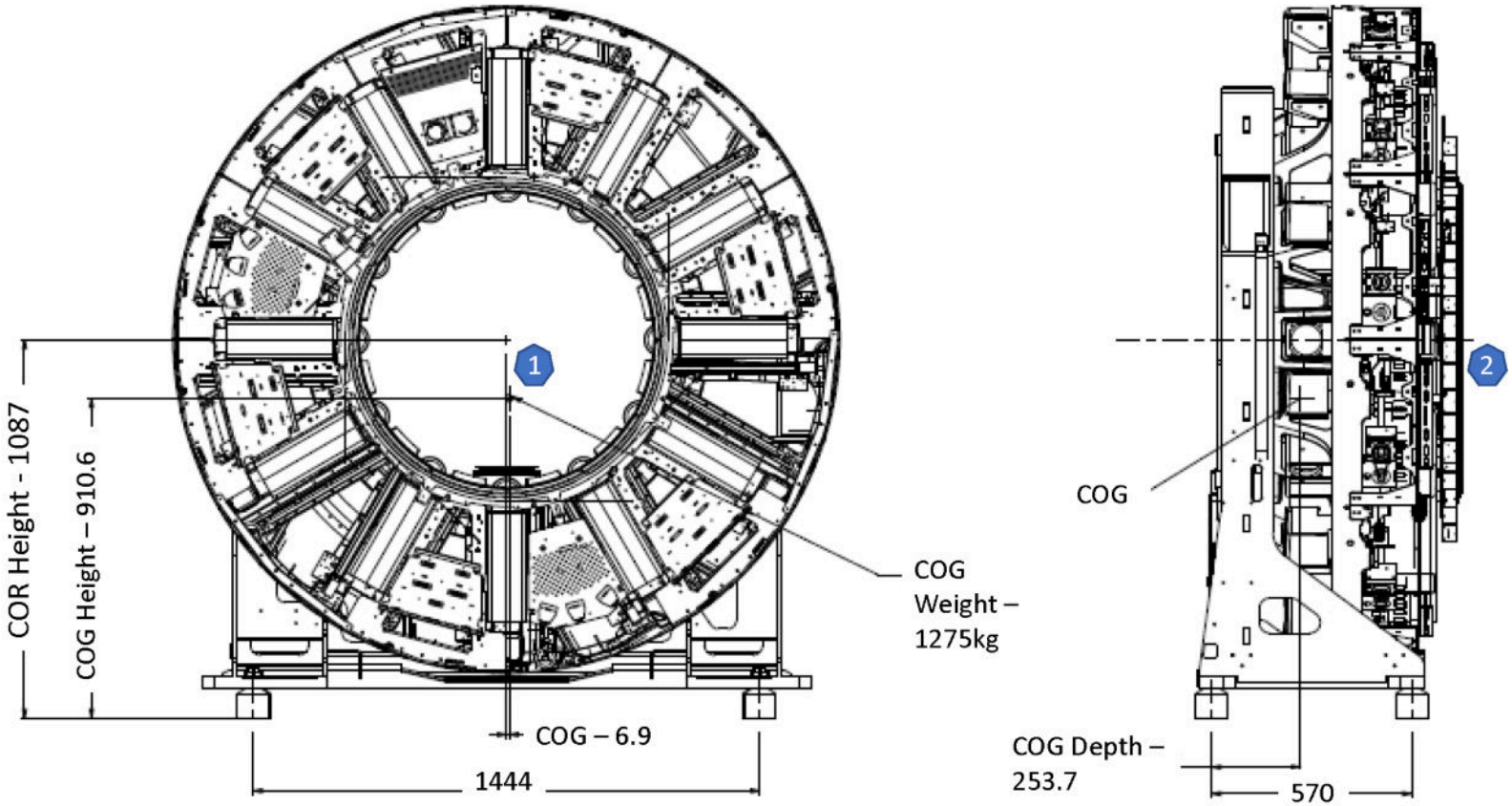

Legend

(1) Center of gravity

(2) Front

Figure 2-13 CT Gantry Center of Gravity Points

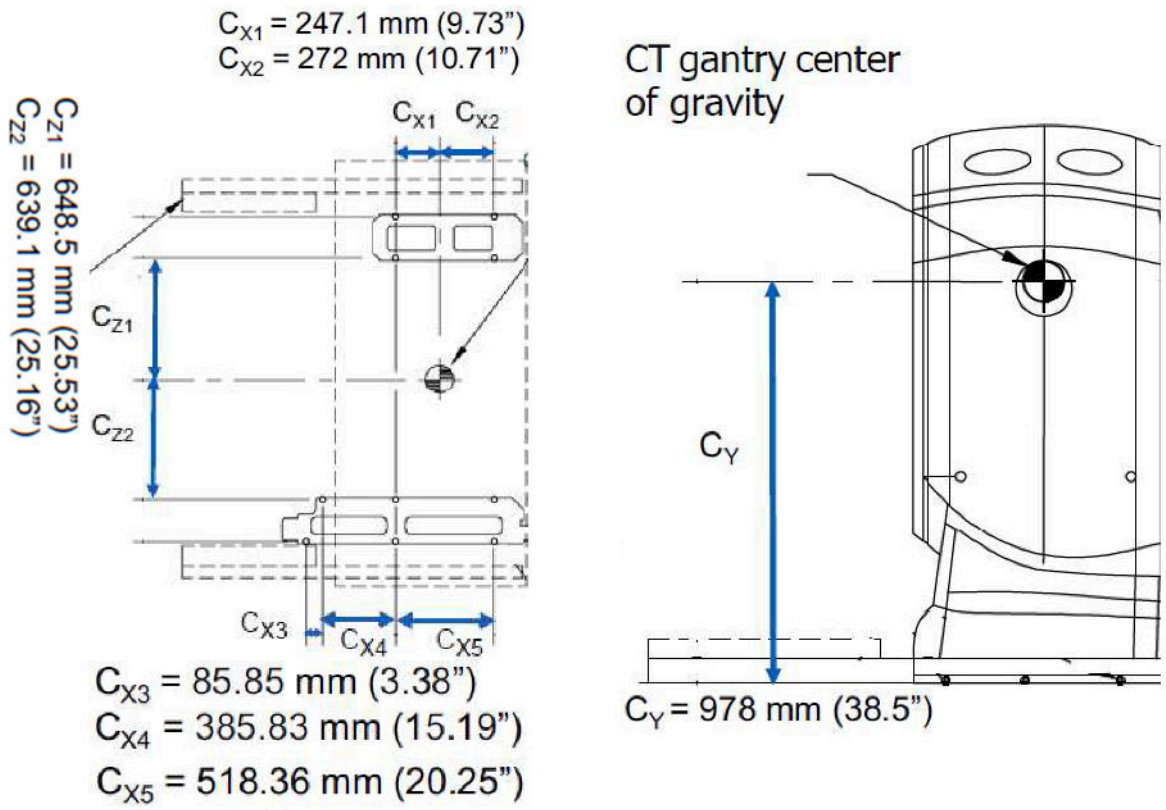

Figure 2-14 Floor Loading and Center of Gravity Points for Gantry and Table

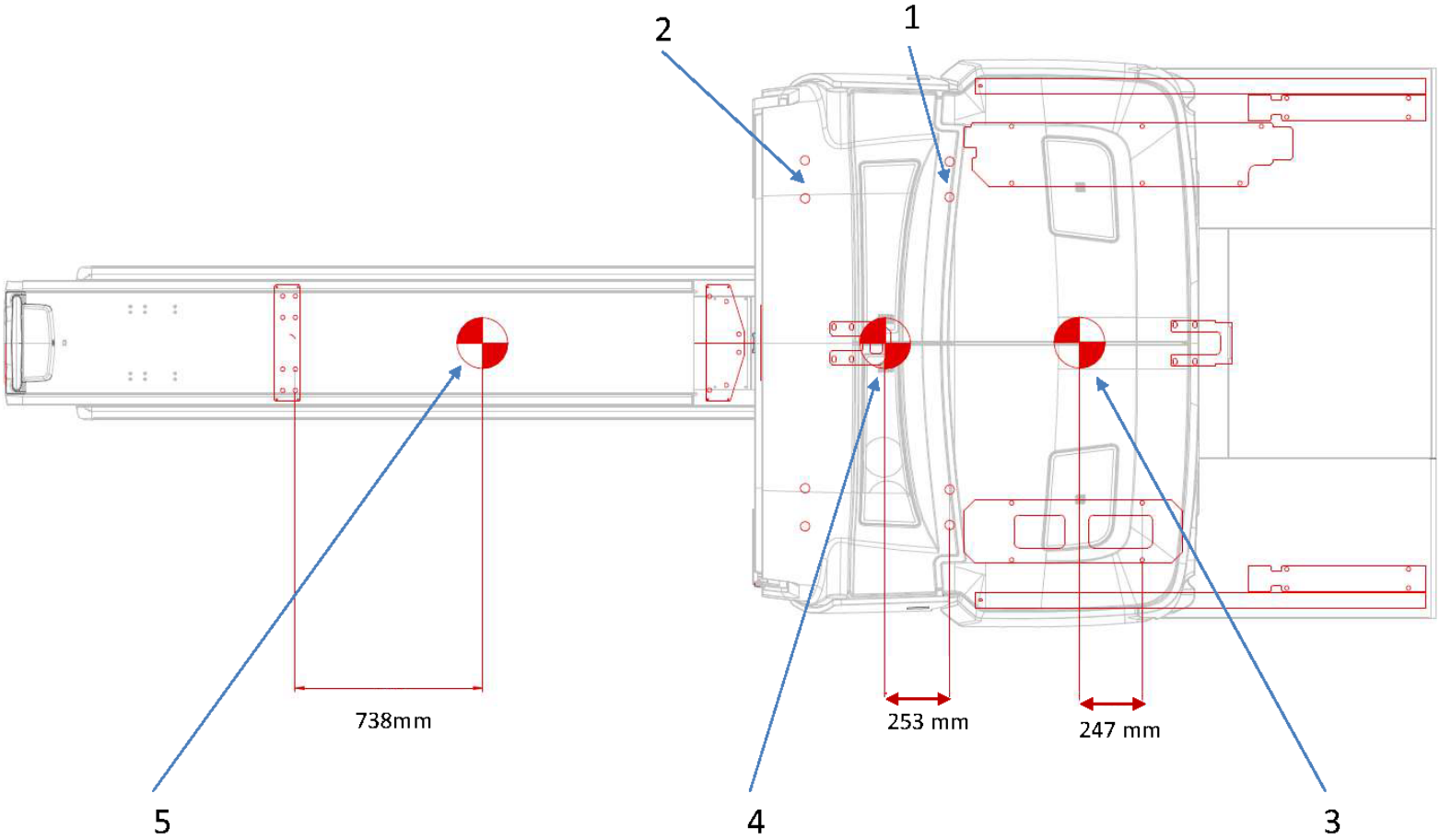

Legend

(1) NM gantry rear pads 375 kg load per pad	(4) NM gantry center of gravity 1350 kg
(2) NM gantry front pads 300 kg load per pad	(5) Table center of gravity 557 kg load (distributed between 2 floor plates).
(3) CT gantry center of gravity 1890 kg	

Figure 2-15 Table Center of Gravity Points

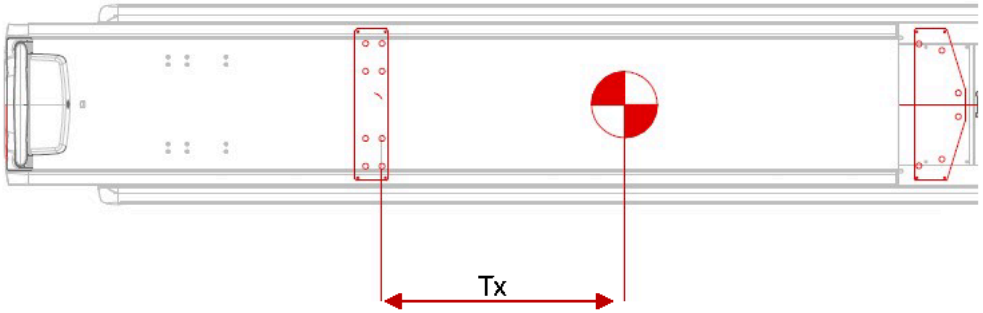

Tx1 = 719 mm (28.3")
Tx2 = 1181 mm (46.5")
Tx3 = 694 mm (27.3")

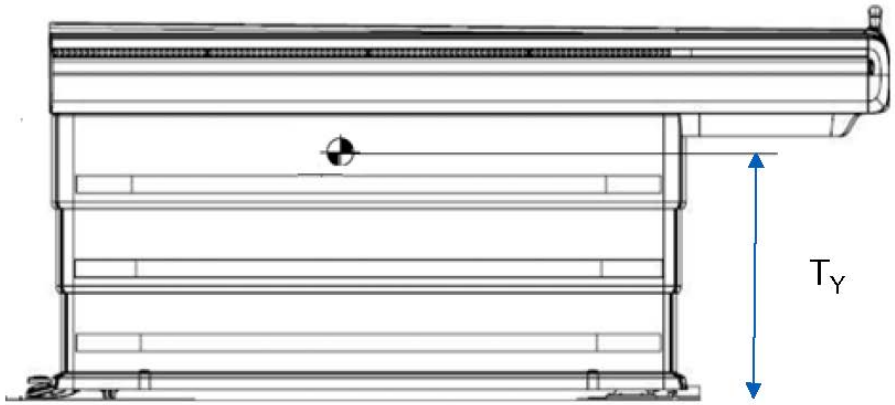

T_{Y1} = 762 mm (30”)
T_{Y2} = 762 mm (30”)
T_{Y3} = 619 mm (24.4”)

Case #1 (Tx1, Ty1):	Case #2 (Tx2, Ty2):	Case #3 (Tx3, Ty3):
• Table loaded with 350 lb. • Cradle retracted, table at maximum UP	• Table loaded with 350 lb. • Cradle fully expanded (inside gantry), table at maximum UP	• Table unloaded (no patient) • Cradle retracted, table at maximum UP

Figure 2-16 CT Open Console Center of Gravity

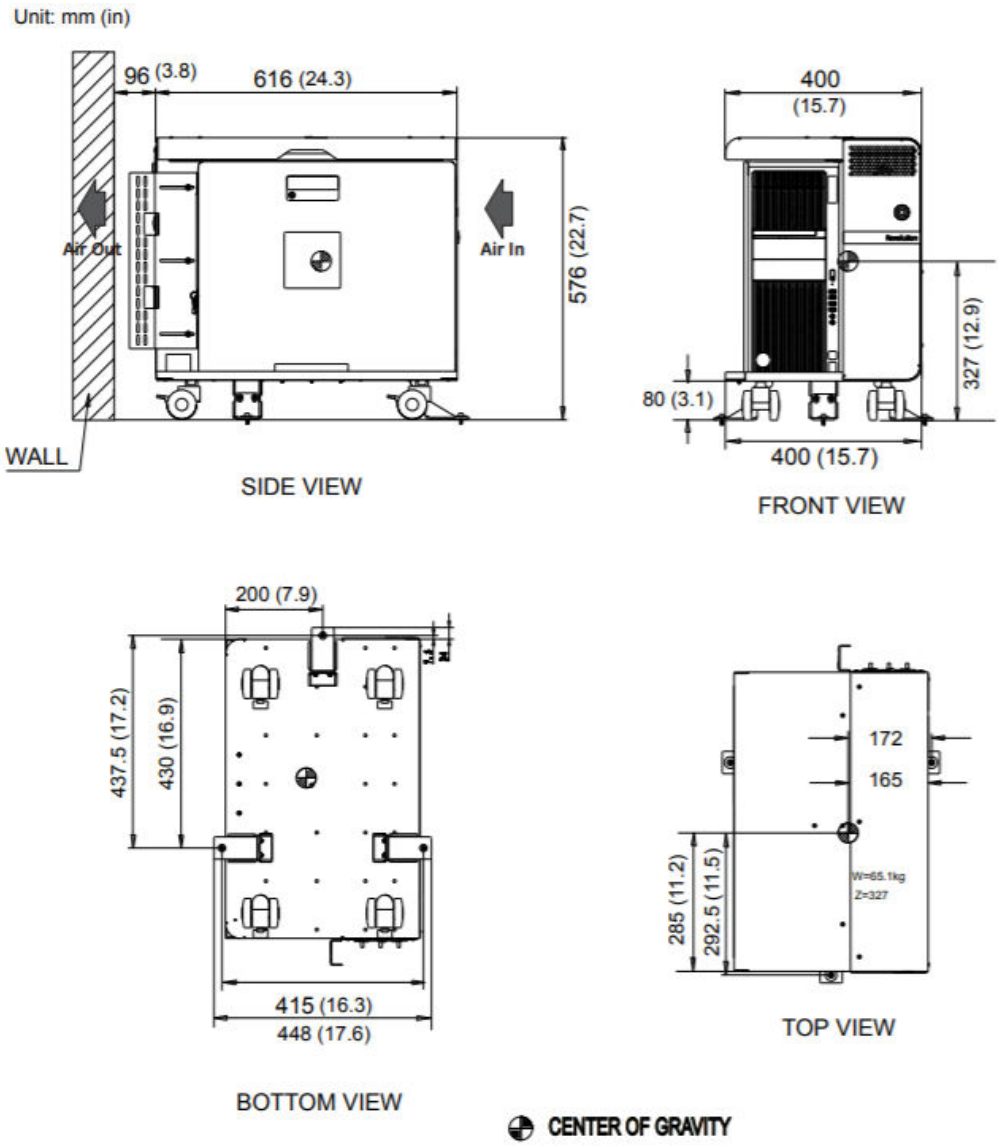

Figure 2-17 NM Acquisition / SmartConsole Computer (if applicable) – Center of Gravity Points

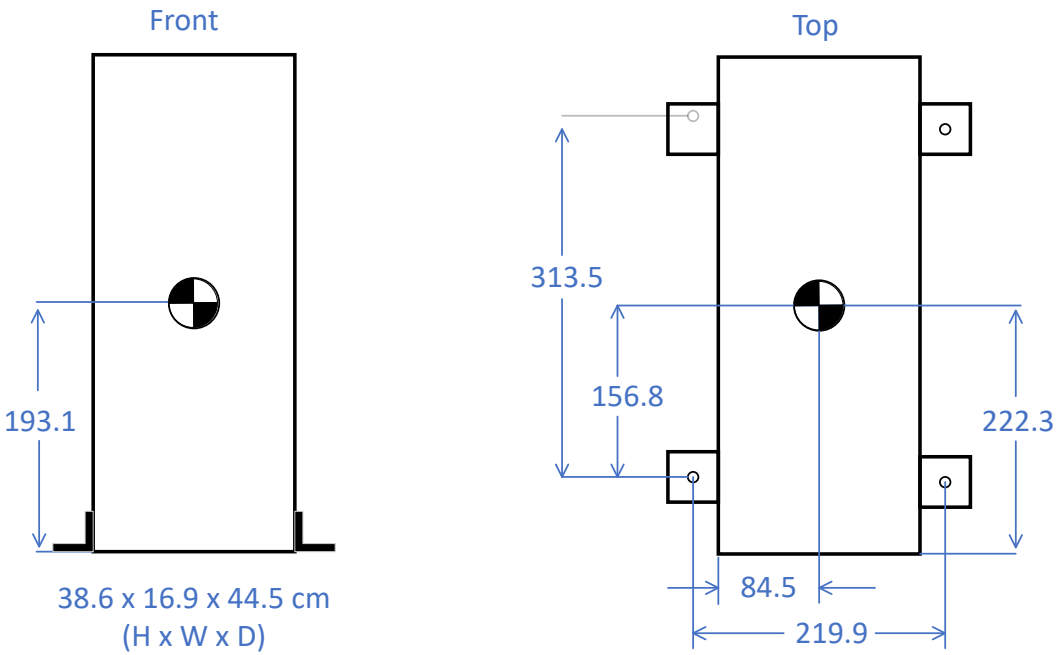

Figure 2-18 CT PDU Center of Gravity

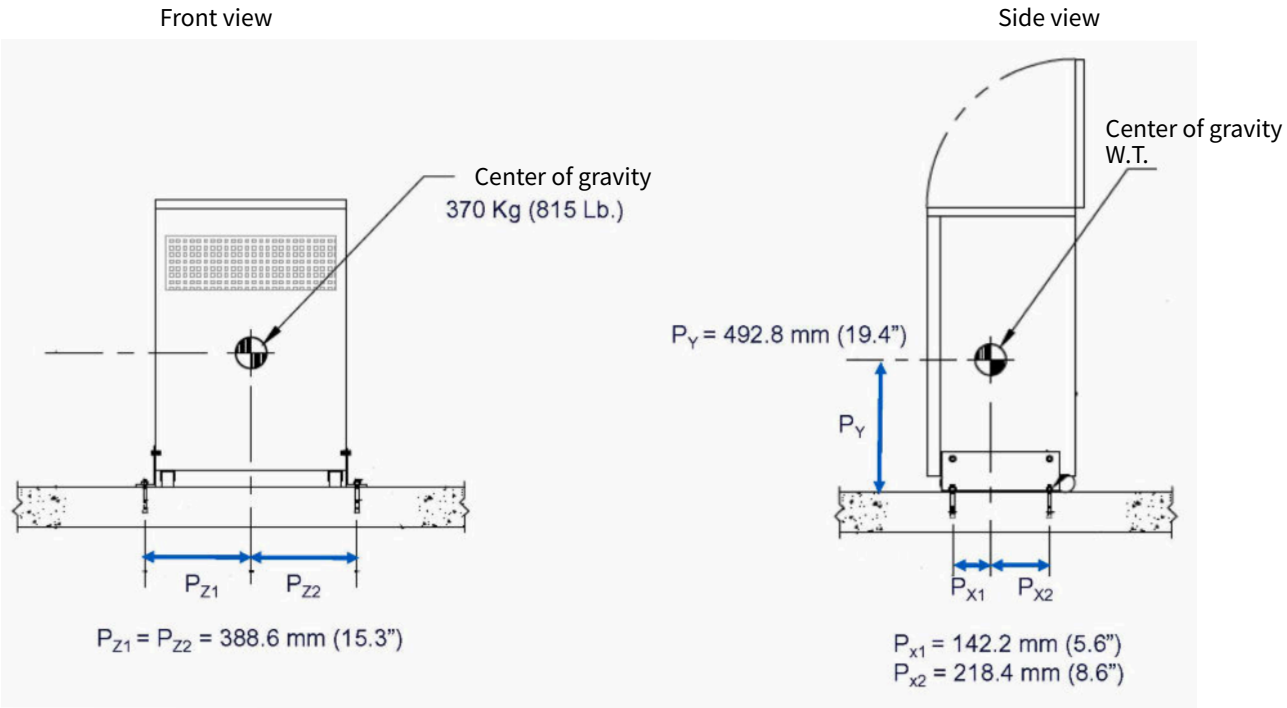

Figure 2-19 Image Generator Center of Gravity

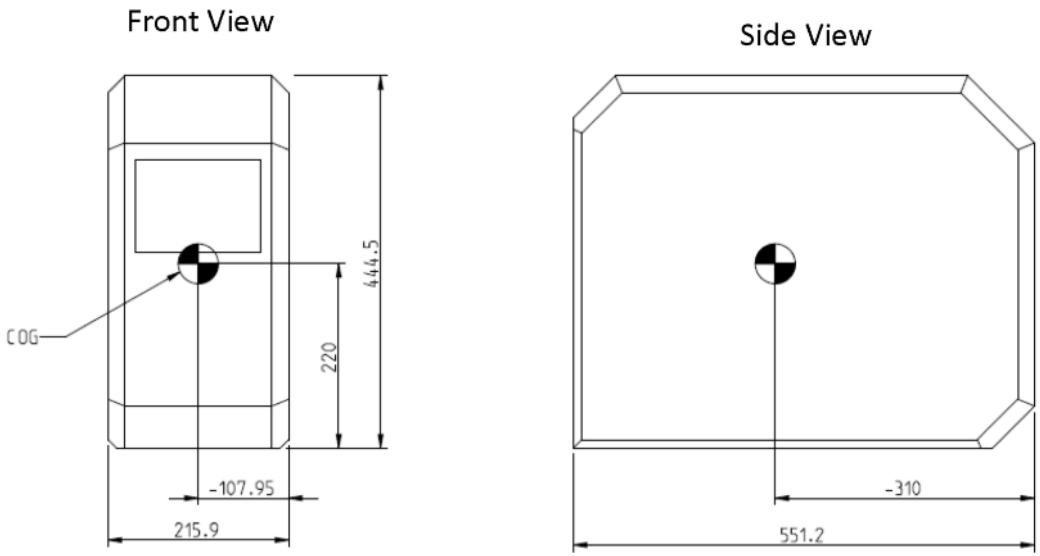

Dimensions: 44.45 x 21.59 x 55.12 cm

2.3.1.3 Floor Anchoring

The system's floor anchors are designed for use **only** on concrete floors that meet the minimal 140mm (5.5") concrete floor requirements.

⚠ CAUTION

ENSURE CORRECT FLOOR AND ANCHORING

For concrete floors thinner than 140 mm or different floor types other anchoring methods might be required. These must comply with the minimum load requirements (see 2.3.1.2 Floor Loading Requirements on page 47) and must be installed and tested at the customer's expense, by the customer's structural contractor.

In such a case, the alternative anchors shall be installed during system installation, and this must be coordinated with the installation team.

Figure 2-20 Main Drills and Cable Ducts

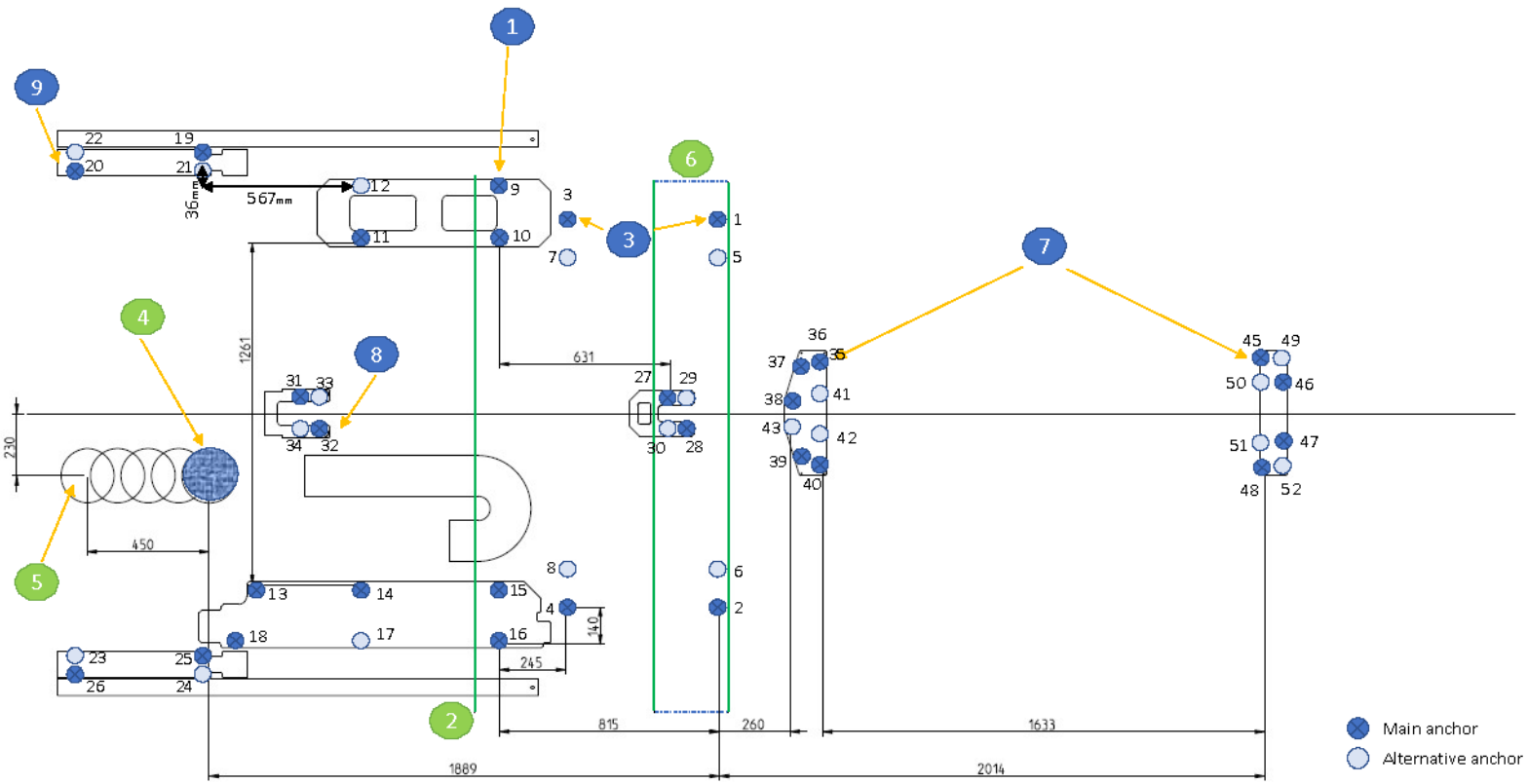

Legend

(1) CT Gantry transporter anchor points 8×HILTI-HSL-3-M10/20 anchors – Long and short plates	(4) Cable inlet coring diameter 200 mm or 200×80 mm deep flush floor duct in this area	(7) Table mounting anchor points [x9] HILTI-HSL-3 M10/40 anchors
(2) CT Scan Line	(5) Alternative locations for gantry cables inlet	(8) CT Service Lead Screw brackets [x4] HILTI HSL-3 M10/20
(3) NM Gantry anchor points [x4] HST3 M16x260 160/140 anchors	(6) NM FOV	(9) CT Service plates [x4] HILTI HSL-3 M10/20

Figure 2-21 NM Gantry Anchors

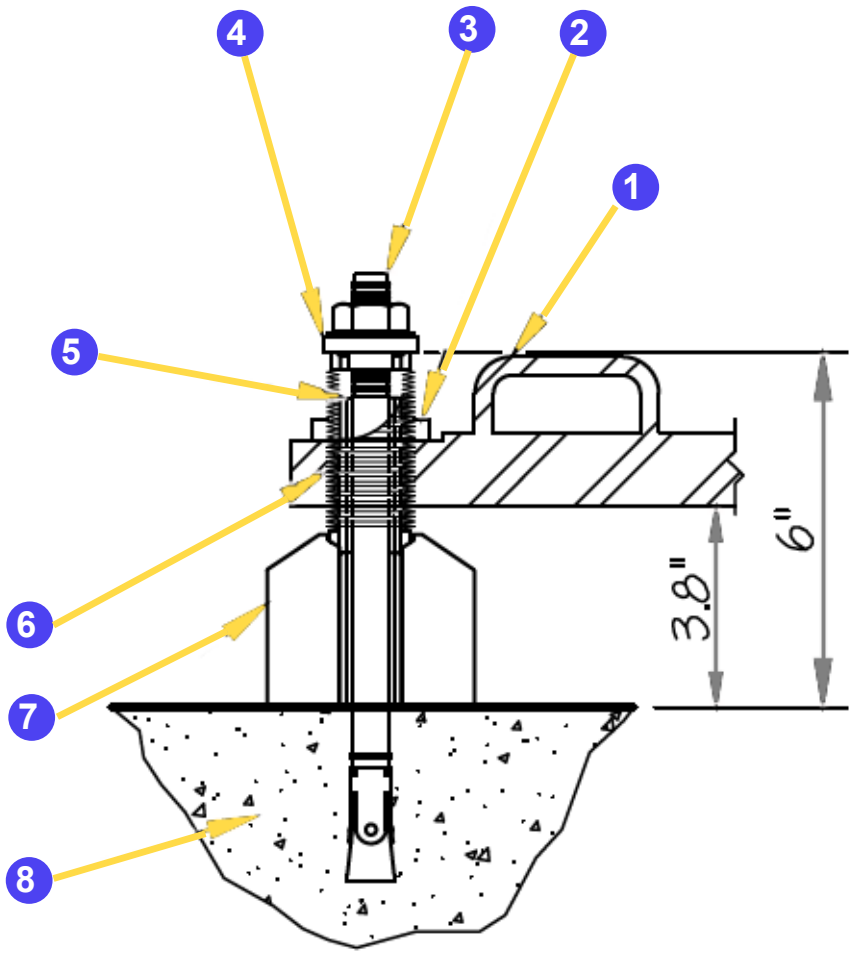

(1) Equipment base
(2) Adjuster lock ring
(3) Anchor
(4) 1-5/8" O.D. x 11/16" I.D. x ¼" Steel washer (by GE)
(5) Adjustable eccentric steel bushings (by GE)
(6) 1-1/2" O.D. x 3-3/8" Leveling screw (by GE)
(7) 3-1/2" O.D. Foot base
(8) Floor structure

Alternative Anchoring: The anchoring method is the same for both regular and alternative anchoring, using the appropriate anchoring holes.

Table 2-3 Drilling and Anchor Chart

No.	X	Y	Drill Hole [mm]	Hole Depth [mm]	Anchored Part	Hole Purpose	Drilling Method	Anchor Type	Torque [Nm]
1	-164.70	722.00	Diameter 16.0	77.0	NM gantry	Main Anchor	Floor marking after initial gantries laser alignment	HST3 M16x260 160/140	110
2	-164.70	-722.00							
3	-734.70	722.00							
4	-734.70	-722.00							
5	-164.70	572.00				Alternative Anchor			
6	-164.70	-572.00							
7	-734.70	572.00							
8	-734.70	-572.00							
9	-980.00	835.65	Diameter 15.0	102.0	CT Short Plate	Main Anchor		HILTI HSL-3 M10/20	35
10	-980.00	630.65							
11	-1495.00	630.65							
12	-1495.00	855.65				Alternative Anchor			
13	-1880.00	-630.65			CT Long Plate	Main Anchor			
14	-1495.00	-630.65							
15	-980.00	-830.65							
16	-980.00	-855.65							
17	-1495.00	-855.65				Alternative Anchor			
18	-1965.00	-855.65				Main Anchor			
19	-2055.00	966.85	Diameter 15.0	102.0	CT Service Plate -1	Main Anchor		HILTI HSL-3 M10/20	35
20	-2545.00	891.85							
21	-2065.00	891.85				Alternative Anchor			
22	-2545.00	966.85							
23	-2545.00	-891.85			CT Service Plate -2	Main Anchor			

Table 2-3 Drilling and Anchor Chart (Table continued)

No.	X	Y	Drill Hole [mm]	Hole Depth [mm]	Anchored Part	Hole Purpose	Drilling Method	Anchor Type	Torque [Nm]
24	-2065.00	-966.85							
25	-2065.00	-891.85				Alternative Anchor			
26	-2545.0	-966.85							
27	-349	72.50	Diameter 15.0	102.0	Gear Bracket of Service Lead Screw	Main Anchor	During Lead Screw Installation	HILTI HSL-3 M10/20	35
28	-269	-72.50							
29	-269	72.50				Alternative Anchor			
30	-349	-72.50							
36			Diameter 15.0		Table Front Floor Plate	Main Anchor		HILTI HSL-3 M10/40	35
37									
38									
39									
40									
41						Alternative Anchor			
42									
43									
45					Table Rear Floor Plate	Main Anchor			
46									
47									
48									
49						Alternative Anchor			
50									
51									
52									

2.3.1.4 Floor Levelness and Flatness

The scan room floor must be leveled, and its surface must be smooth.

It is recommended that the floor in the entire scan room is leveled and flattened. If this is not possible, it is a minimum requirement for the gantry/table installation area to be level and flat.

The floor levelness requirement is essential for proper alignment of the table and the gantry, which affects accurate patient positioning and other aspects of system functionality. Table levelling may not be achievable if overall floor levelness does not conform to these specifications. For more details, see Appendix B Measuring Floor Flatness on page 105.

⚠ CAUTION

FLOOR LEVELING REQUIRED

- The use of floor shims is not suitable to achieve floor levelness.
- Do not use fill material to compensate for holes or depressions in the floor surface.
- Thin fill areas under load will crack and deteriorate over time causing issues with system leveling that may lead to image quality problems. If necessary, level and flatten the entire floor area.

Table 2-4 Floor Leveling Specifications

Item	Requirement
Floor leveling area	537 cm×217 cm (17.6'×7.2') (covering the entire planned area of table and gantry installation, depending on room layout)
Slope	7 mm over 1000 mm
Floor surface	A single poured surface.

Table 2-4 Floor Leveling Specifications (Table continued)

Item	Requirement
Flatness	The surface must be smooth and without significant valleys or peaks. The entire surface area must have an overall flatness of 5 mm over 1500 mm in any direction (see Appendix B Measuring Floor Flatness on page 105 for measurement procedure). 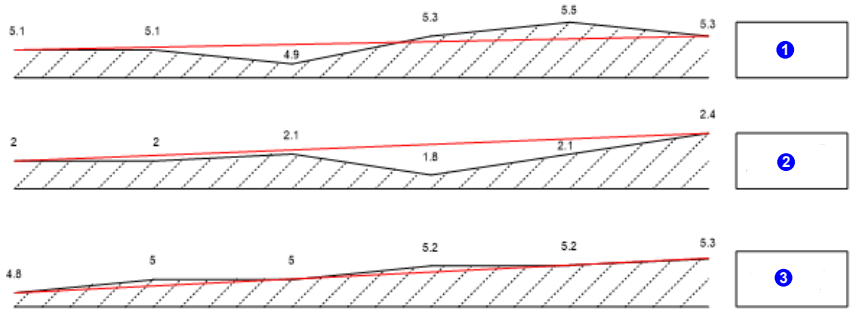 **Legend** Example (1): The slope (red line) = Pass; the flatness (black line) = Fail Example (2): The slope (red line) = Fail; the flatness (black line) = Fail Example (3): The slope (red line) = Fail; the flatness (black line) = Pass

2.3.1.5 Floor Vibration

Floor vibration requirements are included in the general vibration requirements (see 2.3.5 Vibration Specifications on page 64).

2.3.1.6 Floor Conductivity Recommendations

The purpose of this section is to measure the electrical conductivity of the floor surface to the 'GND' (Ground).

- The surface of the conductive floor shall provide a patch of electrical conductivity between all persons and equipment making contact with the floor.
- Using a DVM, measure the impedance between the upper surface of the floor – where the NM gantry is planned to be positioned, and the system power supply GND terminal in the room. The readout should be <35 M Ohm.Repeat the measurement in the area where the patient table will be positioned. The readout should be < 35 M Ohm.

2.3.1.7 Additional Floor Requirements

The floor finish must take into consideration magnetic field and EMI considerations (see 3.5 EMI Considerations on page 74).

2.3.2 Ceiling Requirements

Scan room height must be at least 2.3 meters (7.5').

2.3.3 Wall Requirements

Operator room window

If there is an operator room, the operator must be able to view the patient from the operator room during a scan. The location of the window depends on the position of operator room relative to the scan room. It is recommended that the window is positioned in front of the console so that the operator can look down the length of the bore.

The recommended patient viewing window dimensions are approximately 120 cm wide by 110 cm high (48"×42").

Consult a qualified radiological health physicist for radiation protection requirements for the window glass (lead content and thickness), in accordance with 3.1 Radiation Protection and Shielding Requirements on page 67 and with local requirements.

Radiation protection

For details on wall, door and window radiation protection, see 3.1 Radiation Protection and Shielding Requirements on page 67.

Other

Verify that all walls conform with local regulations, such as washability.

2.3.4 Acoustic Specifications

The system creates acoustic noise. In compliance with IEC 601-1-1 standard the measured noise (at 1m distance away from the system) is less than 70 db. It is recommended that the wall and ceiling surface is of a sound dampening material to avoid noise reverberation and amplification.

Take into account that the system includes an intercom communication system connecting the Operator room and the Scan room, to enable the operator to give the patient instructions during the examination.

2.3.5 Vibration Specifications

The system components are sensitive to vibration in the frequency range of 0.5 to 20 Hz, depending on the amplitude of the vibration. It is the customer's responsibility to contract a vibration consultant or qualified engineer to verify that these specifications are met and implement an appropriate solution.

To minimize vibrations, the system must be installed on a solid floor, as far as possible from the following vibration sources:

Outside building	Inside building	Other
• Parking lots • Roadways • Subways • Heliports • Trains	• Hallways • Elevators	• Hospital power plants containing pumps, motors, air handling equipment and air conditioning units

Figure 2-22 Speed Profile Specifications Micro m/s

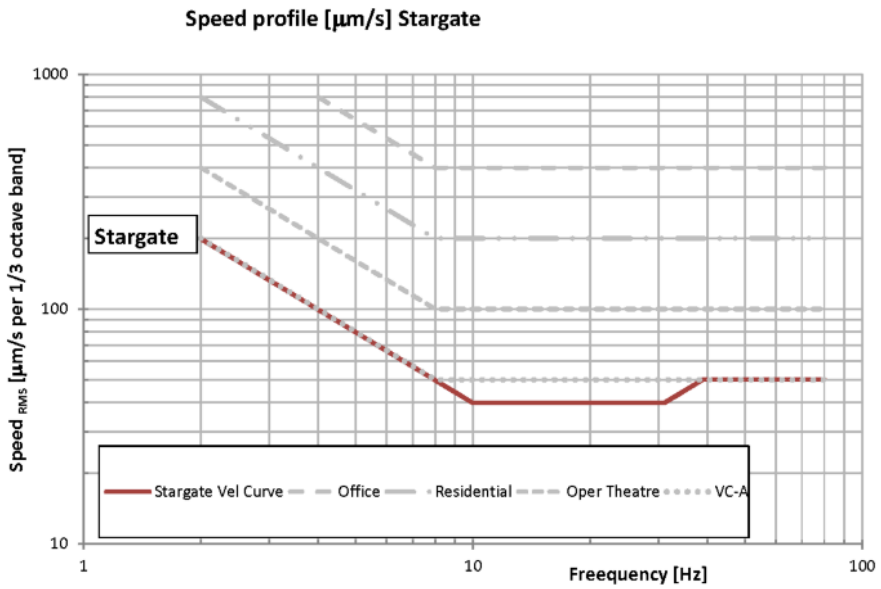

Figure 2-23 Acceleration Profile Specifications mm/s²

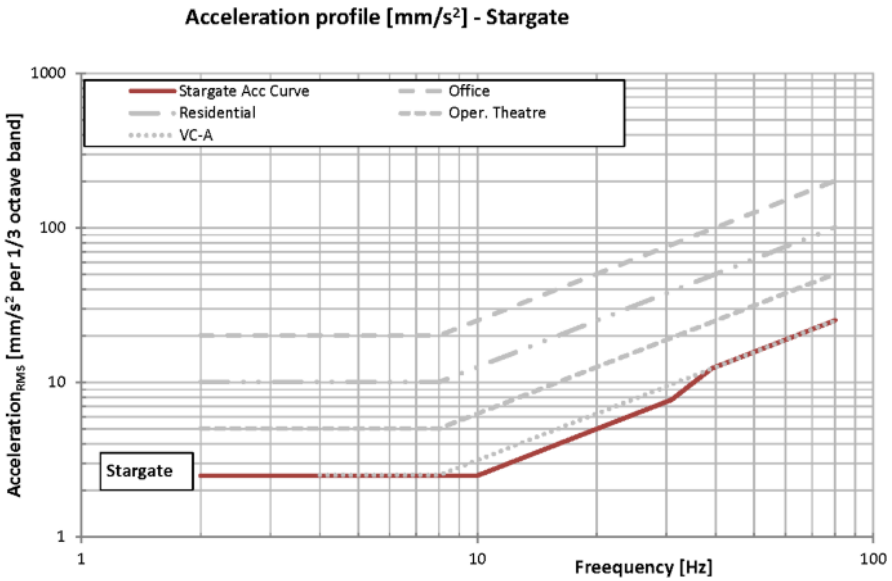

2.4 Seismic Requirements

Seismic requirements are determined and specified by the hospital design professional of record and must be approved by the specific state or country agency. Seismic attachment hardware shown on seismic calculations may differ from hardware supplied with system. Any additional hardware that is required will be the responsibility of the institution and/or their contractor.

Table 2-5 Seismic Subsystem Centers of Gravity and Anchoring Points

IMPORTANT! For special seismic kit details and information, refer to the specific ITF released for the system seismic install.					
Component	**Center of Gravity Location (cm)**			**Anchoring Method**	**See also**
	X	**Y**	**Z**		
NM gantry	See: • Figure 2-12 NM Gantry Center of Gravity Points on page 49 • Figure 2-14 Floor Loading and Center of Gravity Points for Gantry and Table on page 51			[x4] HILTI KB TZ2 CS 5/8" x 10"	

Table 2-5 Seismic Subsystem Centers of Gravity and Anchoring Points (Table continued)

IMPORTANT! For special seismic kit details and information, refer to the specific ITF released for the system seismic install.					
Component	**Center of Gravity Location (cm)**			**Anchoring Method**	**See also**
	X	**Y**	**Z**		
CT gantry on floor plates	See Figure 2-13 CT Gantry Center of Gravity Points on page 50			[x7] HILTI HSL-4 M10/40 anchors	Figure 2-20 Main Drills and Cable Ducts on page 57
CT gantry in service position	See Figure 2-14 Floor Loading and Center of Gravity Points for Gantry and Table on page 51			None	
CT Open console	See Figure 2-16 CT Open Console Center of Gravity on page 53			None	
UPS (optional)				None	http://powerquality.eaton.com/Products-services/Backup-Power-UPS/9155-info.asp
CT PDU	See Figure 2-18 CT PDU Center of Gravity on page 55			None	
NM console	See Figure 2-17 NM Acquisition / SmartConsole Computer (if applicable) – Center of Gravity Points on page 54			Belts and brackets with [x4] HILTI KB-TZ2, 3/8” anchors	
SmartConsole (if applicable)	See Figure 2-17 NM Acquisition / SmartConsole Computer (if applicable) – Center of Gravity Points on page 54			Belts and brackets with [x4] HILTI KB-TZ2, 3/8” anchors	
Image Generator console	See Figure 2-19 Image Generator Center of Gravity on page 56			Belts and brackets with [x4] HILTI KB-TZ2, 3/8” anchors	

Chapter 3 Special Construction Requirements

3.1 Radiation Protection and Shielding Requirements

⚠ CAUTION

RADIATION HAZARD

Specific room shielding requirements should be determined by local regulatory considerations, facility policy and if available, the facility physicist.

Radiation shielding regulations differ from one country or state to another. It is the customer's responsibility to ensure that radiation protection and shielding comply with such regulations and requirements during site preparation and system installation and operation.

The system produces x-ray radiation and involves the use and storage of radionuclides. Appropriate barriers such as walls, lead-shielded glass, lead shields, etc. can be installed to protect staff from unnecessary exposure to radiation.

Patients become significant sources of radioactivity; therefore consideration should be given to maximize the distance between the patient and operator during the uptake and acquisition phases of scan procedures.

Scatter-room shielding requirements must be reviewed by a qualified radiological health physicist taking into consideration:

- Scatter radiation levels within the scan room
- Equipment placement
- Weekly projected workloads (#patient/day technique (kvp*ma))
- Materials used for construction of walls, floors, ceilings, doors and windows
- Access to surrounding scan room areas
- Equipment in surrounding scan room area (for example: film developer, film storage)

3.2 Background Radiation

When the system is calibrated, background radiation from surrounding areas may adversely affect calibration. Therefore all radiation sources must be suitably shielded, including:

- Waiting/Injection areas
- Radionuclide storage and preparation area (sometimes known as “hot lab”)

As a general guideline, if the anticipated background radiation in the Scan Room will be higher than 0.1mR/h (1microGy/h), then appropriate additional shielding should be installed.

If radioactive gases are used in the scan room or in nearby rooms, for example gases used during ventilation lung scans; there must be mitigations to keep the gases away from the detectors. Some gases can settle on the floor while other gases can be drawn into the detector via the cooling fans. A detector's recovery from a gas contamination will depend on the half life of the radioactive gas. Negative room pressure and other air flow mitigations should be considered if radioactive gases are expected to be present in the department.

3.3 Scan Room Shielding

Shielding of the Scan Room includes walls, lead-shielded glass, lead shields, etc. and must be sufficient to protect staff from unnecessary exposure to radiation. The shielding requirements must be determined by a qualified radiological health physicist, taking into consideration:

- Local regulatory requirements
- Facility policy
- CT scatter radiation levels within the scanning room (see)
- Patient location and level of radiation from patients after intake of radionuclides
- Equipment placement
- Materials used for construction of walls, floors, ceiling, doors, and windows
- Weekly projected work-loads (# patient/day technique (kvp*ma))
- Access to areas surrounding the Scan Room
- Equipment in areas surrounding the Scan Room (for example: film developer, film storage)
- Protection of operator room, included leaded window, walls and door

The mAs, kV and aperture scaling factors shown in can be used to adjust exposure levels to the scan technique used at the site.

NOTE

Actual measurements can vary. All measurements have an accuracy of ±20% because of measurement equipment, technique, and system-to-system variation. Use the correction factors shown in to adjust exposure levels to the usual scan technique at your site.

Table 3-1 Shielding Requirements Scaling

Changed Parameter	Multiplication Factor	
mAs	new mAs/100	The units of measure used for radiation levels have been changed in this document, from mR (millirads) to µGy (micrograys). The conversion factor is: 1 mR = 10 µGy
80 kV	0.21	
120 kV	0.71	
140 kV	1.0	
16 x 0.625 LD 8 x 1.25 LD 4 x 2.5 LD Fluro 5mm	0.59	
4 x 1.25 LD 5 mm (1i) Fluro 2.5 mm	0.40	
1 x 1.25 mm images 2 x 0.625 LD 1 x 1.25	0.20 0.10	
4 x 3.75 mm images	0.82	

Figure 3-1 Head Phantom Typical Scatter Survey

ISO Contour µGy/Scan | Technique: 140 kV 100 mA 1 sec 4×5.0 mm

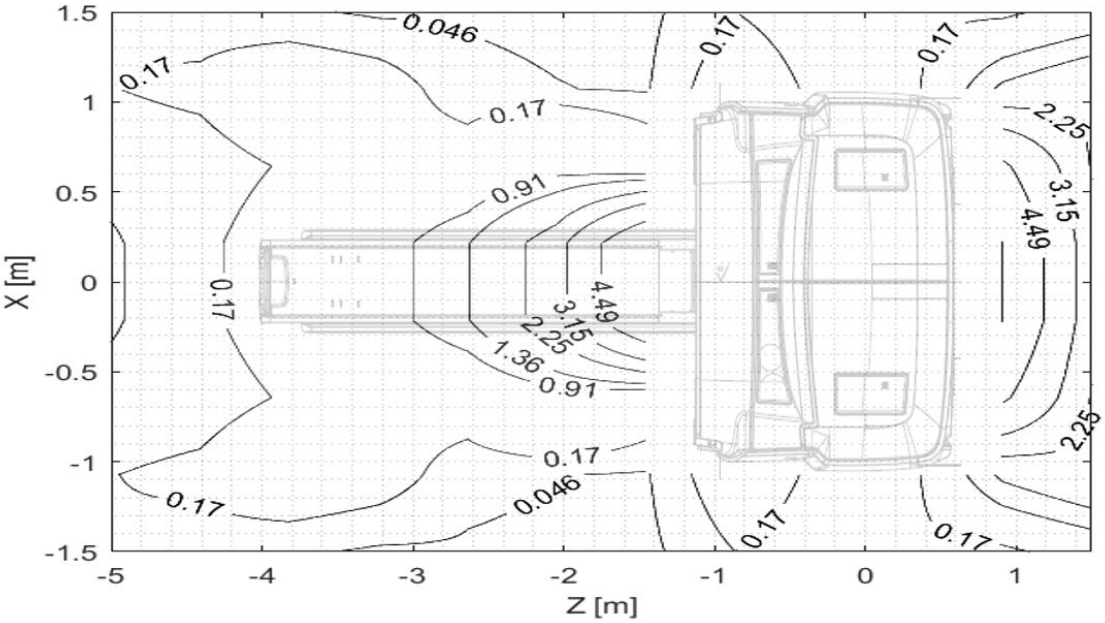

Figure 3-2 Head Phantom Typical Scatter Survey (Side)

ISO Contour µGy/Scan | Technique: 140kV 100mA 1sec 4x5.0 mm

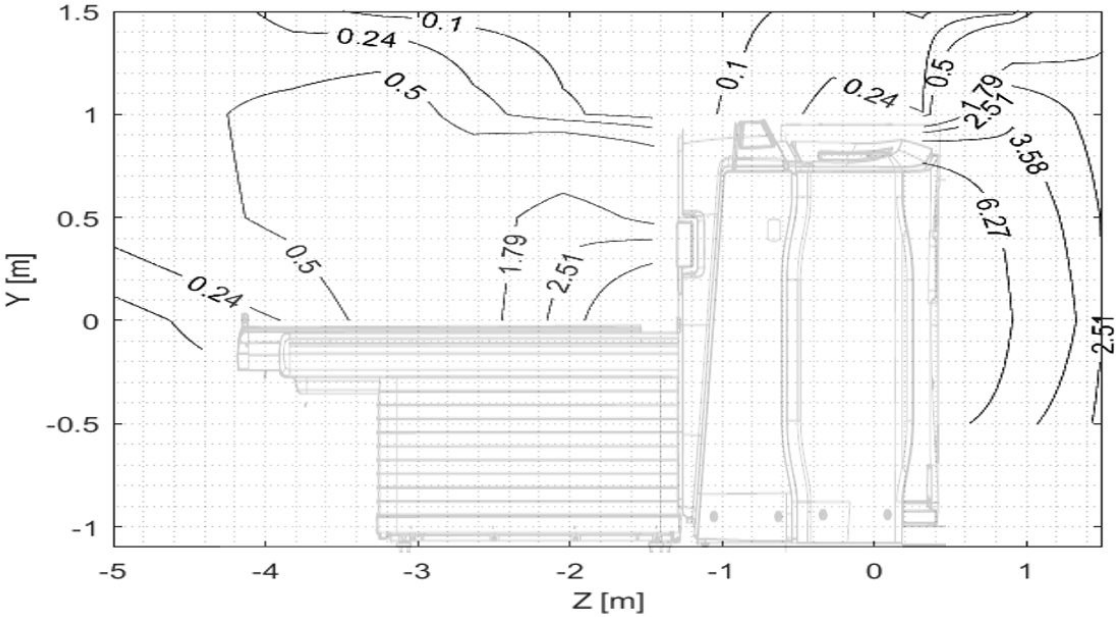

Figure 3-3 Body Phantom Typical Scatter Survey (Top)

ISO ContourµGy/Scan | Technique: 140kV 100mA 1sec 4x5.0 mm

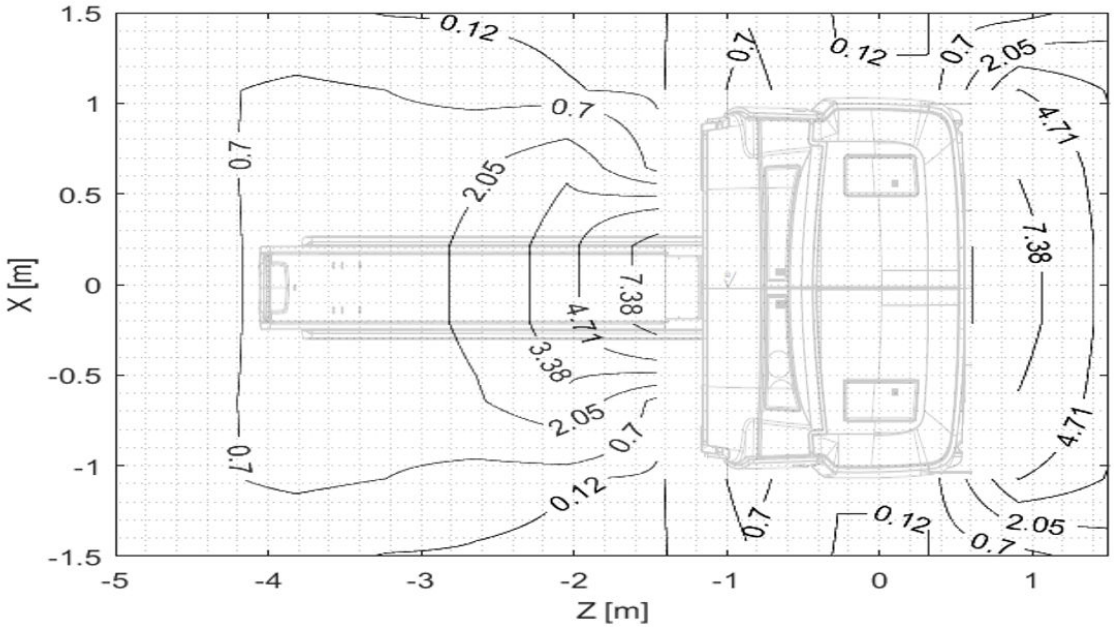

Figure 3-4 Body Phantom Typical Scatter Survey (Side)

ISO ContourµGy/Scan | Technique: 140kV 100mA 1sec 4x5.0 mm

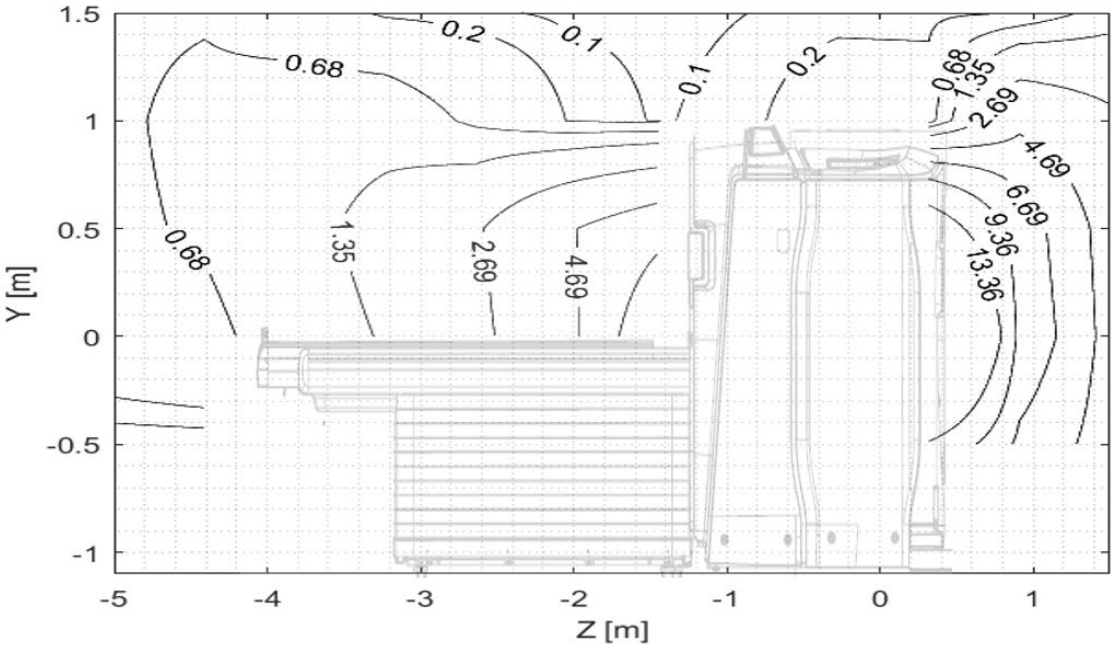

3.4 Magnetic Field Considerations

The ambient static magnetic field in the system location must be less than 10^{-4} tesla (1,000 milligauss). The ambient AC magnetic fields must be below the 10^{-6} tesla (10 milligauss) peak.

IMPORTANT
The system must be installed in X-ray protected room, see 3.1 Radiation Protection and Shielding Requirements on page 67.

Low Frequency Magnetic Field

N/A

Static Magnetic Field Limits

In order to avoid interference on the system, the static field limits from the surrounding environment must be less than 1 Gauss in both the scan and the operator rooms.

3.5 EMI Considerations

3.5.1 Electrostatic Discharge Environment & Recommendations

In order to reduce electrostatic discharge interference, install a charge dissipative floor material to avoid electrostatic charge buildup.

The relative humidity shall be at least 30 percent.

The dissipative material shall be connected to the system ground reference, if applicable.

3.5.2 Electro-Magnetic Interference (EMI) System Placement

NOTE
If power sub-stations exist under or above the scan room, or near the operator room, consider EMI testing to determine if your proposed room meets the published acceptable EMI room limits. This also includes high voltage lines under the scan or operator room floor.

EMI Reduction

If fields of excessive EMI are known or suspected to be present, consult GE Sales & Service for recommendations. Consider the following if you attempt to reduce EMI:

- External field strength decreases rapidly with distance from source of magnetic field.
- External magnetic field leakage of a three-phase transformer is much less than that of a bank of three single phase transformers of equivalent power rating.
- Large electric motors are a source of substantial EMI.
- High-powered radio signals are a source of EMI.
- Ensure sufficiently good screening of cables and cabinets.
- Consider and measure EMI fields of sites with main facility power running under the floor or within the walls or ceilings of the scan room.
- Pay special attention to power substations or high-voltage power lines in proximity to the scan facility.
- If any concerns remain regarding excessive EMI fields, be sure to measure to confirm that your site meets all required specifications.

Table 3-2 Electro-Magnetic Interference (EMI) Constraints

Component	Ambient magnetic fields		System attributes affected	Comments
	Static	AC		
Gantry and Table	< 10^{-4} tesla (1,000 milligauss)	< 10^{-6} tesla (10 milligauss) peak	Imaging performance	
Color Monitor	< 10^{-3} tesla (10,000 milligauss)	NA	Color purity and display geometry	The gantry produces an electromagnetic field that radiates outward in all directions. The CT PDU produces an electromagnetic field that radiates outward from its cabinet in all directions. The UPS provides a consistent power supply in normal conditions and during a site-wide power outage. Do not place sensitive electronics, for example console or computer equipment within 1 m of the CT PDU or 1 m of the UPS, in any direction (including above or below) The UPS and gantry CT PDU are not classified as sensitive electronics.
Console / Computer Equipment	< 10^{-3} tesla (10,000 milligauss)	NA	Data integrity	
Magnetic Media	< 10^{-3} tesla (10,000 milligauss)	NA	Data integrity	

3.5.3 Electromagnetic Immunity

The system is intended for use in the electromagnetic environment specified in Appendix C EMC Compliance on page 111. The customer must assure that the system is installed and used in such an environment.

The system should not be used adjacent to or stacked with other equipment. If adjacent/stacked use is necessary, the system should be observed to verify normal operation.

3.5.4 Recommended Separation Distances

The system is intended for use in an electromagnetic environment in which radiated RF disturbances are controlled. The customer can help prevent electromagnetic interference by maintaining a minimum distance between portable and mobile RF communications equipment (transmitters) and the system as recommended below, according to the maximum output power of the communications equipment.

NOTE
These guidelines may not apply in all situations. Electromagnetic propagation is affected by absorption and reflection from structures, objects, and people.

For transmissions between 150 kHz and 2.5 GHz, adhering to the recommended distance separation will reduce disturbances recorded at the image level, but may not eliminate all disturbances. However, when installed and operated as specified herein, the system will maintain its essential performance by continuing to acquire, display, and store diagnostic quality images safely. For example, in order to avoid image interference risks, a 1 W mobile phone (800 MHz to 2.5 GHz carrier frequency) must be placed 2.3 meters away from the system.

See also Table C-4 Separation Distances for Portable and Mobile RF Communications Equipment on page 116.

3.5.5 Cable Shielding and Grounding

All interconnect cables to peripheral devices must be shielded and properly grounded, except when technologically prohibited. Use of cables not properly shielded and grounded may result in the equipment causing radio frequency interference. GE Healthcare is not responsible for any interference caused by using other than recommended interconnect cables or panels, or by unauthorized changes or modifications to this equipment.

Unauthorized changes or modifications could void the users' authority to operate the equipment.

Electromagnetic Emission

This equipment complies with IEC 60601-1: 2: 2004, IEC 60601-1: 2: 2007 and IEC 6061-1-2: 2014; EMC standards for medical devices.

NOTE
This system complies with the EMC standard when used with supplied cables. If cables of different lengths are required, contact your PM. Cables cannot be cut, shortened, lengthened, or spliced.

The system is suitable to be used in an electromagnetic environment, in compliance with the limits and recommendations provided in Table C-5 Electromagnetic Compliance on page 117.

3.5.6 System Electromagnetic Radiation Disturbance

This system is intended to be used at locations where there is a separation distance of 30 m or greater to Radio Astronomy communications and other sensitive radio equipment operating at 37.5 MHz, and Amateur Radio Services and other sensitive radio equipment operating at 50 MHz. These are considered as third party sensitive radio communications which might be affected by the system.

Any other equipment surrounding the system, as well as any Medical equipment, is not affected by the system.

Chapter 4 Environmental HVAC Requirements

⚠ WARNING

IMPEDED SYSTEM OPERATION / IMAGE QUALITY

Ratings and duty cycles of the system apply only if site environment meets the standards of this section. If environmental specifications are not respected, system operation and image quality may be affected.

The environmental conditions listed in this chapter are essential to maintain proper cooling for the system. These conditions must be maintained at all times, including overnight, weekends and holidays. Only when the system is shut down, for example for major repair, may the air conditioning also be shut down.

Failure to adhere to these requirements can lead to image quality issues and components damage.

⚠ WARNING

OVERHEATING

If air conditioning is not functioning correctly, the system must be shut down.

4.1 General Guidelines

Maintaining constant temperature and humidity levels is essential in order to ensure system stability over time.

Overheating or underheating, or changes in humidity that exceed the requirements provided in this section can cause technical difficulties and system failures and can cause damage to system components. You must conform to the requirements in Table 4-1 Requirements for Ambient Temperature, Humidity and Altitude on page 78 both during system storage and in as long as the system is operational after installation.

Cooling requirements do not include cooling for room lighting, personnel or other equipment.

Locate a wall air-conditioning vent at floor level beside and behind gantry to meet gantry cooling needs and to provide patient comfort. Do not locate any cooling vents directly above the gantry or such that they will blow directly on the detector. Air returns above the gantry are recommended.

Table 4-1 Requirements for Ambient Temperature, Humidity and Altitude

	Maximum	Minimum	Recommended	Maximum rate of change
Temperature	26°C (79°F)	18°C (64°F)	22°C (72°F)	3°C/hr (5°F/hr)
Humidity	60% non- condensing relative humidity	30% non- condensing relative humidity		5%/hr
Altitude	3000 m (9,843 ft.)	-150 m (-492 ft.)		

Figure 4-1 Air-conditioning Ducts

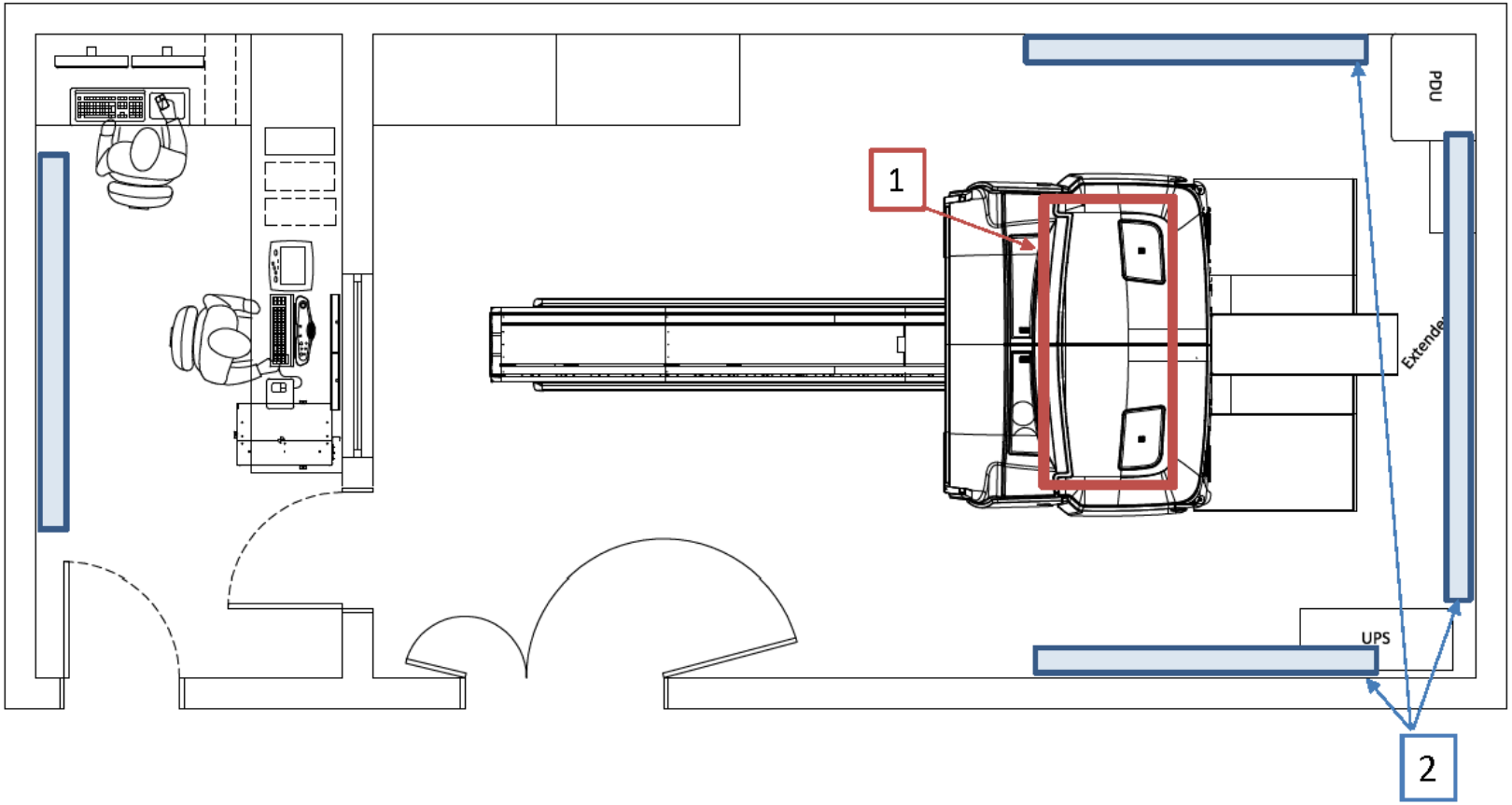

Legend

(1) Ceiling area for “Air Returns” above CT gantry. No cooling vents in this area.

(2) Must plan to flow cold air towards the rear and sides of the gantry.

4.2 Heat Output

Table 4-2 Heat Output in Scan Room

System Component	BTU/hr	Watt	Comments
Scan Room			
NM gantry	7,750	2,273	
Table	682	200	
CT gantry	9,383	2,750	Based on 75 scan rotations per patient and up to three patients per hour, as well as during system calibration
CT PDU	3400	996	
UPS (optional)	5,122	1,501	If a full-load UPS is used, this adds to heat dissipation levels and should be taken into consideration when planning the room.
Recommended subtotal	26,337	7,720	
Operator Room			
CT console	3,200	938	Including 2 monitors
NM console	256	75	(computer only)
SmartConsole (if applicable)	256	75	(computer only)
Image Generator	510	150	(computer only)
Xeleris workstation	256	75	(computer + 2 monitors)
AW workstation (optional)	256	75	(computer + 2 monitors)
Recommended subtotal without options	4,734	1,388	
SYSTEM TOTAL	**31,071**	**9,108**	**Cooling requirements do not include cooling for room lighting, personnel or non-NM/CT equipment**

4.3 Air Quality

The system is especially sensitive to the presence of sulfide, chloride and nitrate contaminates, with sulfur being the most damaging element. If high levels of contaminates exist, it is recommended that appropriate air filtration systems are installed.

If the system will be used for aerosol/gas ventilation studies, special precautions must be taken:

- Local laws and regulations must be reviewed for compliance.
- Room planning should be evaluated by a Radiation Safety Officer.

Consult your local radiation safety officer or regulatory body for best practices to minimize aerosol leakage and subsequent contamination.

Chapter 5 Electrical Requirements

5.1 Power Feed

A dedicated feeder run from the facility main isolation transformer is recommended to power the system. If the system must be powered from an existing distribution transformer and secondary feeder, such as the equipment distribution panel of an x-ray department, installation with other x-ray equipment that uses rapid film changers should be avoided. These changers use a large number of high powered, closely spaced exposures, which may coincide with the scan and produce image artifacts. If a dedicated distribution transformer is provided for the scanner, the minimum recommended transformer size is as follows, rated 2.4% regulation at unity power factor:

112.5 kVA

For this configuration, the minimum recommended feeder size and overcurrent protection device based on line voltage is shown in Table 5-3 Minimum Feeder Wire Size on page 83

In all cases, qualified personnel must verify that the transformer and feeder, at point of take-off, plus the run to the system, meet all the requirements provided in this document.

Table 5-1 System Power Characteristics

Selected Technique	Values	Comments
Maximum power demand	140 KV, 380 mA 90 kVA @ 0.85 PF	
Continuous (average) power demand at maximum duty cycle	22 kVA	
Maximum allowable total power source regulation	6%	
Minimum recommended transformer size	112 kVA	With 2.4% rated regulation at unity power factor. Resultant maximum allowable feeder regulation is 3.4%

NOTE
If local regulations require feeding electronic equipment in either the scan room or the operator room via a separate isolation transformer, you can order the Isolation Transformer (P/N E4500BC).

The following tables, and Table 5-4 Power Supply Requirements on page 84) are based on the use of copper wire, rated 75 C and run in steel conduit. The current rating (ampacity) is determined in accordance with the National Electrical Code (NFPA 70), Table 310-16 (2002).

NOTE

Ampacity, or Current Rating, is the RMS current which a device can carry within specified temperature limitations in a specified environment, depending upon: a) temperature rating, b) power loss, c) heat dissipation.

The ampacity for a power cable depends on properties of the conductor and the insulation and on environmental conditions adjacent to the cable.

The minimum feeder size is determined by the current rating (ampacity) of the circuit protection device listed below. In some cases a larger size may be necessary in accordance with local regulations for total source.

Table 5-2 Nominal Power Line Ranges

The nominal line voltage must fall within one of the ranges listed below						
Nominal line voltage (Volt)	380	400	420	440	460	480
Hi-Line Limit, +10% (Volt)	418	440	462	484	506	528
Lo-Line Limit, -10% (Volt)	342	360	378	396	414	432
Continuous line current (Amp)	30	29	27	26	25	24
Momentary line current (Amp)	137	130	124	118	113	108
Maximum line current (Amp)	152	144	137	131	126	120
Minimum recommended circuit protection rating (Amp)	110	110	100	100	90	90

Table 5-3 Minimum Feeder Wire Size

Feeder Length (MDA to MDP) Feet (Meters)	**Minimum feeder wire size, AWG or MCM (Sq. MM)/ VAC**					
	380 VAC	**400 VAC**	**420 VAC**	**440 VAC**	**460 VAC**	**480 VAC**
50 (15)	2 (35)	2 (35)	3 (30)	3 (30)	3 (30)	3 (30)
100 (30)	2 (35)	2 (35)	3 (30)	3 (30)	3 (30)	3 (30)
150 (46)	2 (35)	2 (35)	3 (30)	3 (30)	3 (30)	3 (30)
200 (61)	2 (35)	2 (35)	3 (30)	3 (30)	3 (30)	3 (30)
250 (76)	1 (45)	1 (45)	2 (35)	2 (35)	2 (35)	3 (30)
300 (91)	1/0 (55)	1/0 (55)	1 (45)	1 (45)	2 (35)	2 (35)

Table 5-3 Minimum Feeder Wire Size (Table continued)

Feeder Length (MDA to MDP) Feet (Meters)	**Minimum feeder wire size, AWG or MCM (Sq. MM)/ VAC**					
	380 VAC	**400 VAC**	**420 VAC**	**440 VAC**	**460 VAC**	**480 VAC**
350 (107)	2/0 (70)	1/0 (55)	1/0 (55)	1 (45)	1 (45)	1 (45)
400 (122)	2/0 (70)	2/0 (70)	1/0 (55)	1/0 (55)	1/0 (55)	1 (45)
Feeder Length (PDUB to CT PDU) Feet (Meters)	Minimum sub-feeder wire size, AWG or MCM (Sq. MM)/ VAC					
	380 VAC	400 VAC	420 VAC	440 VAC	460 VAC	480 VAC
32 (9.7536)	2 (35)	2 (35)	3 (30)	3 (30)	3 (30)	3 (30)

5.2 Power Supply Requirements

The system must receive its power supply via a dedicated feeder run from the nearest Main Distribution Panel (MDP).

NOTE
According to local regulations, a primary power disconnect device must be provided on the power line supplying the CT PDU, see Figure 5-3 MDP (A1) Main Disconnect & UPS Control Panel on page 93 .

The system operates on a three-phase, solidly grounded four-wire wye or Delta power source. The neutral wire does not need to run to the system (i.e. no need for a four-wire connection). If you are running a NEUTRAL wire, terminate it in the A1/MDP box.

Table 5-4 Power Supply Requirements

	Characteristics	**Comments**		
Line voltage specifications	380 to 480 VAC			
Line frequency specifications	50-60 Hz ± 3 Hz			
Measured kVa load characteristics	90	Maximum power demand	90	
		Average (continuous) power demand	22 kVA	At maximum duty cycle
Line Impedance	0.4 Ohm			
Fuse or Circuit Breaker Ratings	110 A			

Table 5-4 Power Supply Requirements (Table continued)

	Characteristics	Comments
Power requirements for equipment not powered from the system	In scan room and in operator room: 2 one-phase regular power outlets for service tools (such as vacuum cleaner, electric drill, soldering iron etc.)	For service activities
Power stability (transient etc) requirements	Maximum transient voltages should be limited to 1500 V peak	Sags and surges of the power line must not exceed the absolute range limits shown in the **Nominal Power Line Ranges** table in 5.1 Power Feed on page 82.
Inrush current	Can withstand up to x10 of the recommended Circuit Breaker Ratings that could be reached during system power up, due to the system main transformer.	

Total load regulation as measured at the input terminals must not exceed 6%. The capacity of the facility transformer and the size and length of feeder wires directly affect the load regulation presented to the system.

NOTE

- The MDP (A1) must provide overcurrent protection for the system and facilitate multi-point remote “Emergency Off” control of system power. An MDP with a disconnect that uses an under-voltage release control is preferred over shunt trip devices. The rating of the MDP disconnect device depends on the nominal line voltage at the site.
- The electrical rating is described on the system rating label attached to the gantry; not on the PDU.

5.3 Grounding

5.3.1 Grounding Requirements

The system has been designed to use an equal potential grounding system. The required ground system is shown in Figure 5-1 System Grounding Map on page 86 .
The system includes 3 primary grounding points:

- System power ground point, located in the PDU
- NM Reference ground point, located at the side of the NM gantry base
- CT Reference ground point, located at the front of the CT gantry base

All exposed metal surfaces in the patient vicinity are grounded to the reference ground point.

Figure 5-1 System Grounding Map

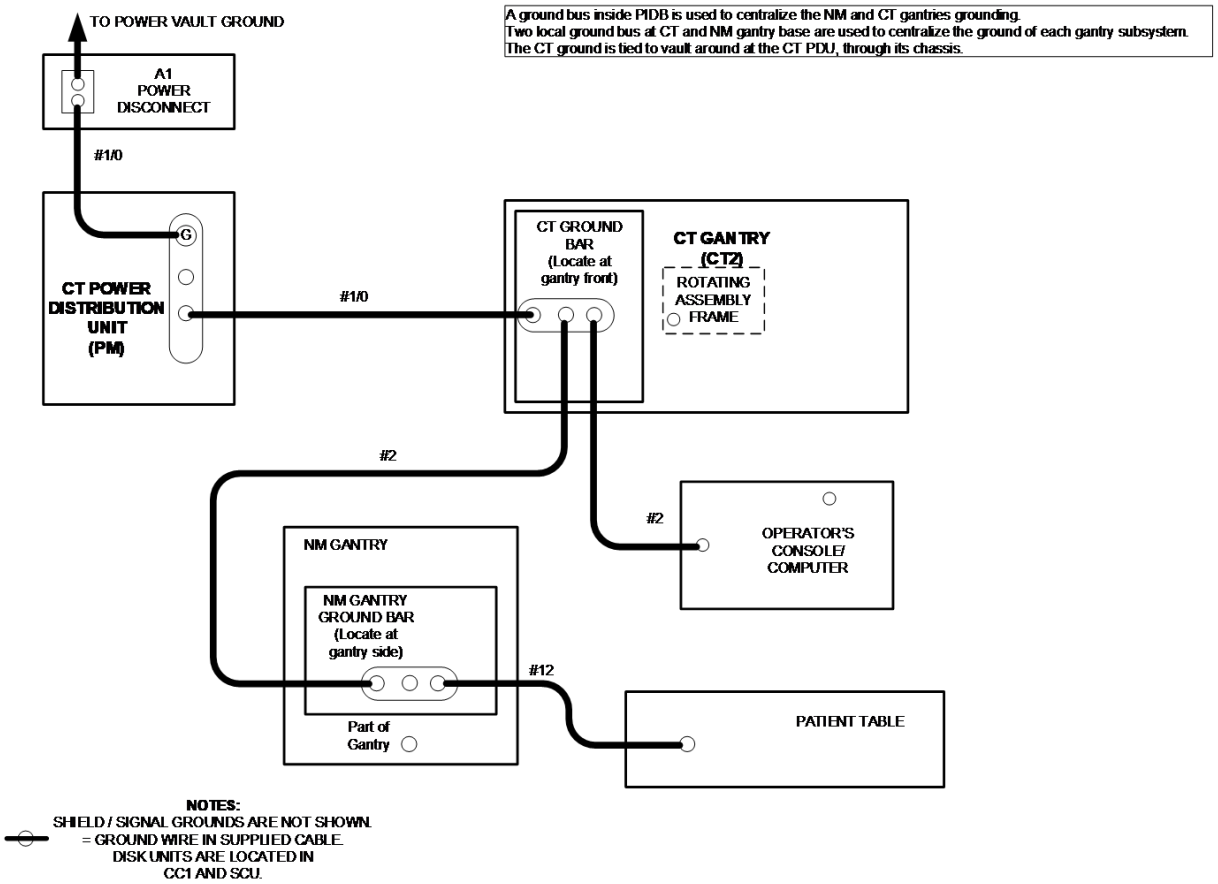

NOTE

- Two local ground bus at the CT and NM gantry base are used to centralize the ground of each gantry subsystem. The CT ground is tied to vault around at the CT PDU, through its chassis.
- Shield/signal grounds are not shown.
- Wire+circle = Ground wire in supplied cable.
- Disk units are located in CC1 and SCU.

5.3.2 Grounding of System Input Power

Make sure to comply with the following grounding requirements:

- Run a dedicated 1/0 (50 mm^2) or larger insulated copper ground wire with the phase wires from the main distribution panel to the main facility ground.
- Connect the ground wire to the MDP (A1) through which it passes, in accordance with local codes.
- The system's ground conductor must be in the same conduit as the system phase conductors. This ground conductor must be bonded to the main facility ground.

NOTE
The shield or armor of armored cable is not sufficient for this purpose.

5.4 Interconnections

It is recommended that all cables are run inside ducts or conduits, as illustrated below.

Ensure adequate duct or conduit sealing to prevent penetration of liquids or other objects that may damage the cables.

Figure 5-2 Example of Suggested Cable Ducts Routing

Minimum room size – separate electronics closet & locating review stations elsewhere

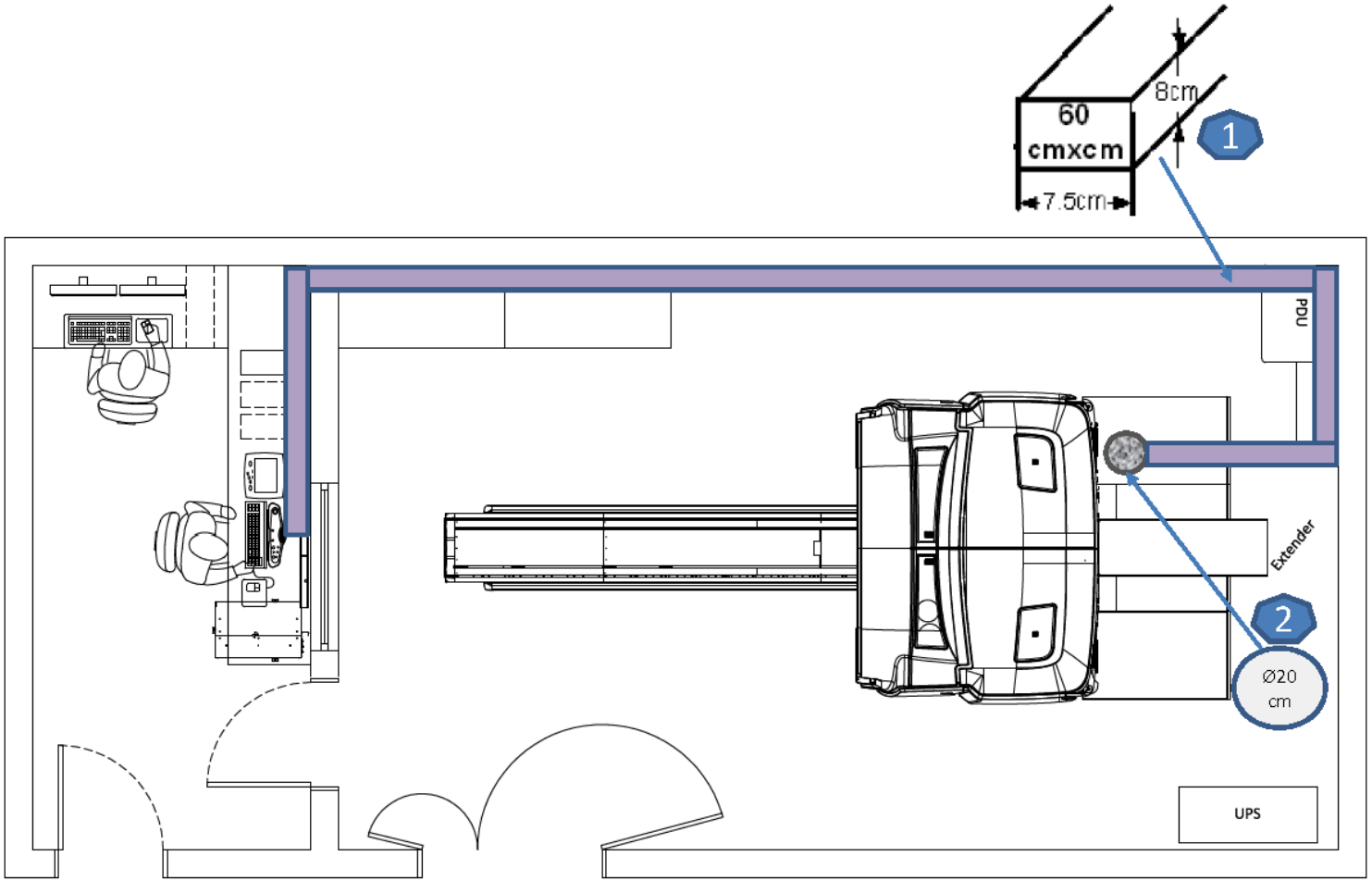

Legend

(1) Recommended duct width×depth

(2) Floor openings behind gantries

5.5 System Cable Information

This section provides technical information regarding system cables connecting different sub-systems, in order to facilitate the planning of cable routing.

Table 5-5 Sub-system Inter-connection Cables

Start / Destination		H/V Separation (Y or N)	Run #	Actual Length (Usable Length)*1		Description
From	To			Feet	Meters	
PDU	CT gantry	Y	050	63.5 (55)	19.35 (16.76)	HVDC, PDU to gantry
PDU	CT gantry	Y	051	63.5 (55)	19.35 (16.76)	HVAC, PDU to gantry
PDU	CT gantry	Y	052	63.5 (57)	19.35 (17.56)	LVAC, PDU to gantry
PDU	Console (adaptor box)	Y	053	80 (75)	24.5 (22.86)	LVAC, PDU to console
PDU	CT gantry	N	055	63.5 (55)	19.35 (16.76)	Ground, PDU to raceway
Console	CT gantry	N	056	83 (75)	25.5 (22.86)	Ground, raceway to console
PDU	CT gantry	N	100	70 (62)	21.4 (18.86)	Signal, gantry MSUB to PDU
Console	CT gantry	N	101	86.45 (78)	26.35 (23.71)	Signal, gantry MSUB to OC
Console	CT gantry	N	102	86.45 (81)	26.35 (24.86)	Signal (LAN), gantry to OC
Console	CT gantry	N	103	80 (75)	24.3 (22.86)	Fiber optic, gantry to OC
PDU	UPS	Y	060	15 (12)	4.6 (3.6)	Power cable, CT PDU to UPS
PDU	UPS	Y	061	15 (12)	4.6 (3.6)	Power cable, UPS disconnect panel to CT PDU
UPS	MDP (A1)*2	Y	110	45 (37)	13.6 (11.3)	UPS control cable
Injector	CT gantry	N		100	30.5	Gantry to injector
Injector	Console (adaptor box)	Y		82	25	Power cable injector to console
ECG	CT gantry	N		30	10	Gantry to ECG monitor signal
NM gantry	CT gantry	N	126	29.5	9	CT table interface cable
NM gantry	CT gantry	N	124	29.5	9	NM-CT gantry interface cable

Table 5-5 Sub-system Inter-connection Cables (Table continued)

Start / Destination		H/V Separation (Y or N)	Run #	Actual Length (Usable Length)*1		Description
From	**To**			**Feet**	**Meters**	
NM gantry	CT gantry	N	125	29.5	9	ECG and trigger/respiratory cable
NM gantry	CT gantry	N	129	29.5	9	ECG trigger cable
NM gantry	CT gantry	N	132	26.25	8	
NM gantry	PDU	Y	121	49.21 (37.73)	15 (11.5)	110V AC main power inlet - cable
NM gantry	NM host	N	128	65.6 (54.1)	20 (16.5)	NM gantry-to-computer Ethernet cable

*1 Actual length is the entire cable length, connector to connector, including cable run inside each sub-system. Usable Length is the portion of the cable routed externally between sub-systems.

*2 The MDP can be the A1 or other primary power disconnect device

Connector Sizes

The table below shows information about the largest connector size for each sub-system interconnect cable bundle.

Table 5-6 Connectors

	Largest Connector Size	Connector
NM console	5.6 cm	
Gantry	6 cm	

5.6 Typical Customer Supplied Cables and Wiring

5.6.1 MDP (A1)

For the convenience and safety of service, it is recommended for a lockout-tagout (LOTO) compatible Main Disconnect Panel (MDP/A1) be installed in the room with the gantry.

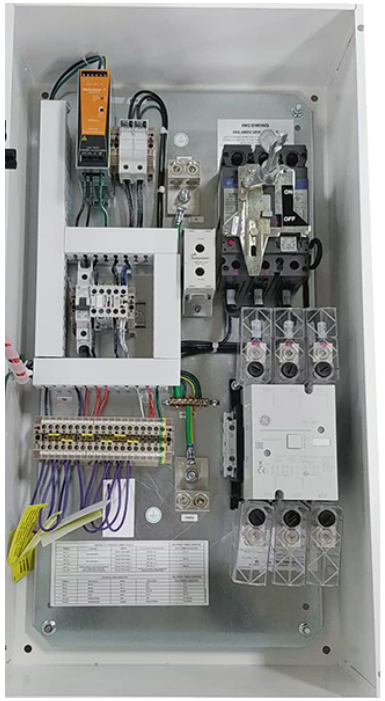

If a UPS is ordered, it is strongly recommended that you order UPS from GE (PN B7864PZ). In this case, you must also order the MDP that is designed to work with the UPS.

A UPS is highly recommended. See Uninterruptible Power Supply (UPS) Option for details.

GE-orderable MDP units (A1) include:

- For the U.S. (440V or 460-480V) – PN E4502AG (90A)

- For Europe and Asia (380-400V or 420V) – PN E4502AH (110A) (or equivalent).

NOTE
The GE orderable MDP, such as A1, has an Emergency OFF (EMO) switch integrated into the front panel.

The following table lists the technical details for customer-supplied wiring.

Table 5-7 Customer Supplied Cables and Wiring

Wiring		Description	Maximum run length Meter (ft.)	
Quantity	**Size AWG (mm^2)**		**From**	**To**
Run No. 1 – from primary power source to MDP *1 (see Figure 5-3 MDP (A1) Main Disconnect & UPS Control Panel on page 93)				
3	*1	Power	1 (3)	1 (3)
1	1/0 (50)	Ground	1 (3)	1 (3)
Run No. 2 – from MDP to PDU * (see Figure 5-3 MDP (A1) Main Disconnect & UPS Control Panel on page 93)				
3	*1	Power	1 (3)	1 (3)
1	1/0 (50)	Ground	1 (3)	1 (3)
1	*1	Neutral (not required)	1 (3)	1 (3)
Run No. 3 – from MDP to System Emergency Off (SEO) (see Figure 5-3 MDP (A1) Main Disconnect & UPS Control Panel on page 93)				
2	14 (2)	Power	2 (6)	2 (6)
1	14 (2)	Ground	2 (6)	2 (6)
Run No. 4 – CT PDU to warning light control.				
2	14 (2)	Warning light 24 volt control A3J2-1,2,3,4	N/A	N/A
Run No. 5 – CT PDU to scan room door interlock.				
2	14 (2)	Scan room door interlock A3J6-1,2	N/A	N/A
*1 Refer to for AWG (mm2) wire sizes				

Figure 5-3 MDP (A1) Main Disconnect & UPS Control Panel

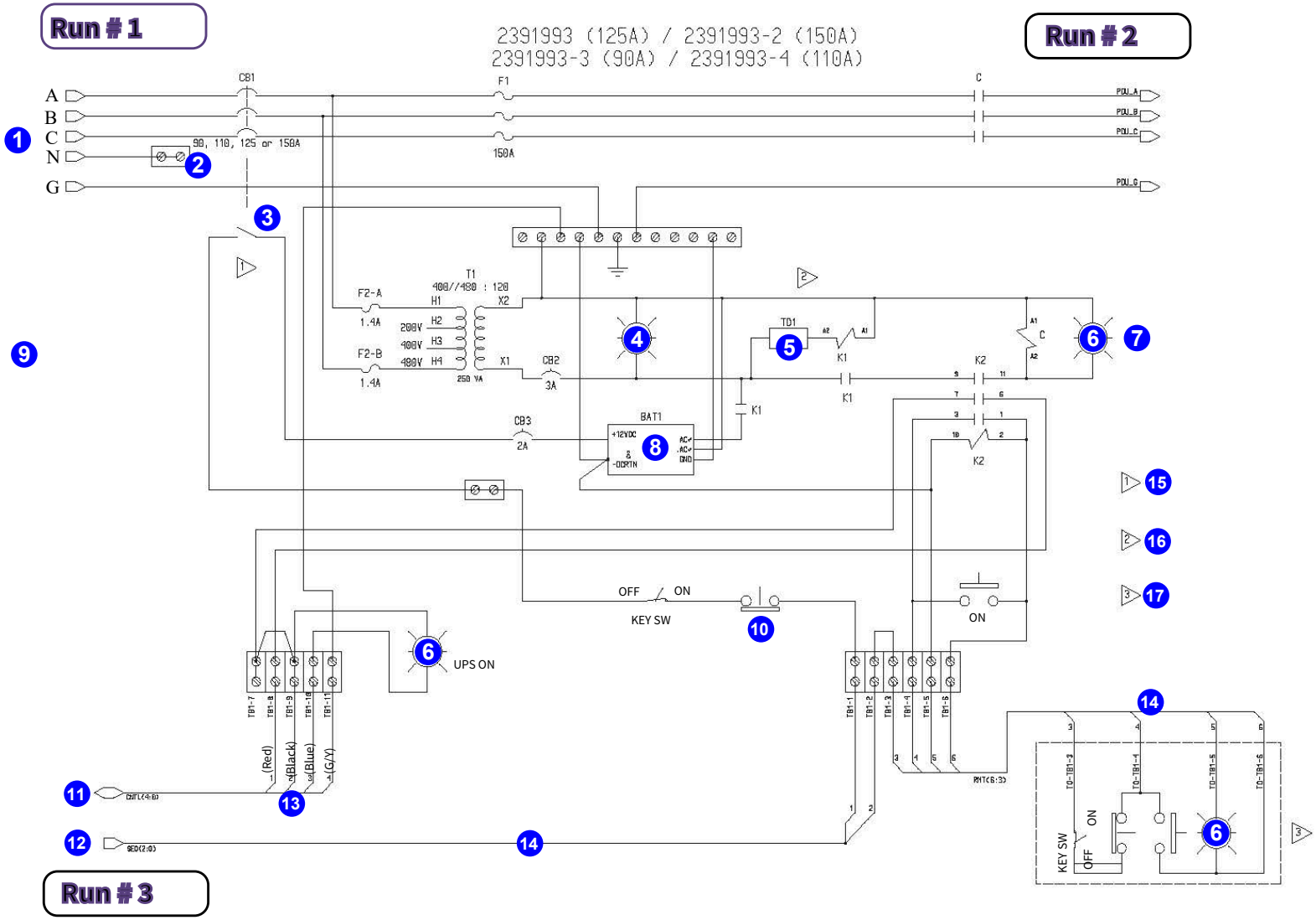

Primary Power Disconnect – Fusible Disconnect & Magnetic Contactor

Legend

(1) Mains _A / B / C / N / G	(10) Emergency OFF
(2) Isolated neutral block	(11) Control cable to UPS disconnect panel
(3) Aux switch	(12) To scan room SEO button
(4) White	(13) (Supplied with UPS kit)
(5) Time delay	(14) Field supplied wiring)
(6) Green	(15) Auxiliary Switch Installed Internal to Main Circuit Breaker
(7) Contactor ON	(16) Electronic Time Delay Device (TD1) Set to Nominal 5 Second Delay
(8) Battery & charger	(17) Remote On / Off Control Components (Included with A1 Panel)
(9) (Located elsewhere – such as a reading room)	

5.6.2 Primary Power Disconnect

MDP with lockout /tagout (LOTO)

In order to install and service the system, the customer must have a lockout /tagout (LOTO) compatible Main Disconnect Panel (MDP) installed in the room.

The MPD and the lockout/tagout must be visible when servicing the system.

The customer must ensure that all cables and wiring specified in this section are prepared in advance. These cables and wiring components are not supplied with the system.

5.6.3 Warning Light and Door Interlock Connections

- Warning light and door interlock are not mandatory in some countries. If you install an x-ray warning light in the room, it is recommended that you use the 4-wire method which:
  - Minimizes EMC interference
  - Increases contact life of the relay used in the PDU
- If a door switch will not be used, an additional jumper must be added to TS6 in the PDU during installation.
  If the jumper is not in place, exposures will not be made.

5.7 Lighting Specifications

5.7.1 Scan Room Lighting

The lighting should be planned so there is sufficient light for:

- Scan preparation
- Scan setup
- Patient unloading
- Working light for service and maintenance activities

The lighting should be designed so that it can be dimmed or otherwise changed in order to minimize discomfort for patients lying supine for extended periods on the patient table with the ceiling in view.

NOTE

- Scan room lighting above the gantry and patient table area should consist of fluorescent lights only (no direct sunlight or direct bright light from filament light bulbs).
- During system servicing in the scan room, a relatively bright light is required in the area behind and around the gantry.

5.7.2 Operator Room Lighting

The lighting should be planned taking into account that operators will be working with computer monitors and reading digital images during much of the day. Reflections in monitors should be avoided, and other ergonomic factors taken into account.

The operator room lighting must also take into account that relatively bright light is required while servicing the system consoles.

5.8 Power Line Outlets for Service

It is recommended to install at least two standard power outlets in the scan room and in the operator room, to be used for electrically powered service tools. The exact location of these outlets should be defined according to regulatory and service clearances around the system.

Chapter 6 Network and GE Remote Access Requirements

6.1 Network Requirements

The system requires the following network connections:

- Broad-Band Network Connection (BBNC) (required): broad-band network connection wall jack, located within 1 m (40") of the operator computer location, for internal hospital networking and GE remote broadband connectivity.
- Local Area Network (LAN) (required)
  - LAN connections are usually required in the operator room for:
    - Xeleris and/or A/W workstation
    - SmartConsole (if applicable)
    - CT subsystem
    - NM subsystem
    - DICOM LAN printer (optional)

      The LAN and WAN Networks sockets/outlets (minimum 4; recommended 5) must be available in the operator room within a distance of 1 m (40") of the operator computer location, processing workstations (Xeleris) and LAN printer installed in the operator room.
  - In the scan room it is recommended to have one LAN socket/outlet available in close proximity to the CT or NM gantry for service engineer activities actions.
- Wide Area Network (WAN) (optional)

6.2 RSVP Requirements

The system requires internet connectivity as follows:

- The system allows for DNS configuration or Proxy server connection to the internet.
- If replacing an existing system that has a remote GE connection, the current internet connection supporting GE remote access (InSite) connection can be reused.

- Proxy configuration for internet access may also include authentication credentials (user name and password). Local IT contact must be able to provide these details if required.
- If the site would like to whitelist only certain URLs, the following addresses can be used for RSVP connectivity. All service traffic is via port 443:
  - RSVP Servers:
    - https://insite.gehealthcare.com
    - https://insite-eu.gehealthcare.com
    - https://as1-insite.gehealthcare.com
    - https://as2-insite.gehealthcare.com
  - Flexera Servers:
    - https://gehealthcare-ns.flexnetoperations.com
    - https://download.flexnetoperations.com
- It is not recommended to route the connection over an existing VPN tunnel. If the customer requires the use of a VPN tunnel, a case must be escalated to the local connectivity team.

Appendix A Customer Checklist

The checklist must be completed by the customer and delivered to GE prior to installation.

IMPORTANT
This checklist is general in nature and is intended to assist the customer in verifying site preparation. The checklist does not cover all details in this manual, and it is the customer's responsibility to fully prepare the site, taking into account all details and specifications set out in this manual.

Site Information	Contact Information	Contact Persons	Name	Telephone	email
Site name		Site project coordinator			
Department		System administrator			
Street		Chief technologist			
City, State, Zip		Facilities engineer			
Country		Shipping / Receiving			
Telephone		Physician			
Fax		Other			
Safety Declaration					
I hereby confirm that the relevant site personnel have read the *Safety and System Overview Manual*, in conjunction with this Pre-Installation Manual.			Name		
			Position		
			Signature		
Completion Sign Off					
I hereby confirm that pre-installation is complete and that I have examined and confirmed all items in the Pre-Installation Customer Checklist			Name		
			Position		
			Signature		

Table A-1 Deviation from Specifications in Site Preparation Manual

Description		Personal Details	
Floor and anchoring	I hereby confirm that the site takes full responsibility for the floor and anchoring methods differing from the specifications in this manual	Name	
		Position	
		Signature	

Table A-2 Site Preparation Timetable

Description		Status	See	Comments
Scheduling	Project schedule verified with GE			
	3rd party vendors scheduled			
	Can meet the committed site ready date			
	Construction completion date matches delivery date			
	System delivery date scheduled for			
	Detectors delivery date scheduled for			
	Installation dates scheduled for			
	Applications/Training date scheduled for			
	Site Ready date scheduled for			
	First Use date scheduled for			

Table A-3 Room Preparation

Description		Status	See	Comments	
Pre-construction	Site layout drawings completed and approved				
	Radiologist health physician has reviewed the room layout				

Table A-3 Room Preparation

Description		Status	See	Comments	
	3rd party vendors identified: _____ _____ _____				
Post-construction: Room measurements and layout	• Length				
	• Height				
	• Width				
Servicing clearance	Meets all requirements, including local codes and local regulatory requirements as detailed in Appendix D Regulatory Clearances on page 118. No grounded walls are present in the regulatory clearance areas.				
Egress	Sufficient egress space per local regulatory requirements				
Structural and floor preparation	Floor tolerates specified loads				
	Floor meets thickness requirements or alternate anchoring has been specified and is available from the customer's structural engineer				
	Floor meets leveling requirements				
	Floor meets flatness requirements				
	Floor meets vibration requirements				
Ducts	Ducts installed in floor, according to approved room layout				
	Ducts meet requirements (size, depth, sealing, high voltage separation)				
Electricity requirements	Main Distribution Panel (MDP (A1)) meets requirements and is installed				

Table A-3 Room Preparation (Table continued)

Description		Status	See	Comments	
	Wall outlets are live and available for installation and service tools				
	Environmental conditions	Ample working light is available for service			
Air-conditioning meets requirements for system thermal loads					
Air-conditioning meets humidity requirements					
Magnetic field in camera room is < 1 Gauss					
Room is clean and free of dust, ready for installation					
Room shielding	Shielding of scan room meets requirements				
	Shielding of operator room meets requirements				
Safety	Planned location of emergency button in scan room is easily accessible by operator				
	Interlock system installed				

Table A-4 Unloading, Conveyance and Storage

Description		Status	See	Comments
Temporary storage	System will be delivered on first install day **or** Some or all crated components will be stored until installation date			
	Site has sufficient storage area			

Table A-4 Unloading, Conveyance and Storage (Table continued)

Description		Status	See	Comments
Staging area	If a staging area is required, its size and all environmental conditions meet the system's requirements.			
Loading dock	Is a loading dock with 112 cm (44") truck-height available?			
	Full-size truck can access loading dock **or** Site will arrange for short truck delivery			
Unloading by forklift	Site has forklift with weight capacity to lift a fully crated gantry 1500 Kg (3306 lbs.) **or**			
	Site will arrange for appropriate forklift			
Rigging (required if halls/ elevator/doors access is not available)	Rigging company details: Name: _____ Contact person: _____ Phone: _____			
	Rigging company has insurance policy			
	Insurance policy of rigger company is attached			
Pallet truck	Site has pallet truck **or** Site will arrange for pallet truck			
Delivery route	Delivery route is defined by site and meets requirements			
	Delivery route is tested by site			
Installation room	Room can be locked during installation			
Suitability of halls, elevators and doors for conveyance of all components, when mounted on moving kit/wheels **Note:** All items must refer to conveyance as follows:	All door openings, hallways are large enough			
	Pathways can tolerate weight			

Table A-4 Unloading, Conveyance and Storage (Table continued)

Description		Status	See	Comments
- From truck to installation room (crated or uncrated) or - From truck to storage (crated) and from storage to installation room (crated or uncrated)	Elevator openings and size are large enough			
	Elevator can tolerate weight			
	Gantry can clear all corners			
	Inclines on the route to the camera room are suitable (weight, size and incline angle)			
	State the incline angle			
	There are delicate carpets or tiles along the conveyance route			
	Floor protection is supplied for delicate surfaces			
Waste materials	Site has arranged for disposal of empty wooden cases, foam blocks and large cardboard boxes after installation			

Table A-5 Network Preparation

Description		Status	See	Comments
Local networking or IT Contact information	Info provided			
Network cabling and hardware	Installation complete			
Broadband	Installed and tested			
Network definitions and testing	Acquisition station site name, hostname and IP address defined and tested			
	Xeleris workstation site name, hostname and IP address defined and tested			
	CT console site name, hostname and IP address defined and tested			
	AW workstation site name, hostname and IP address defined and tested			

Table A-5 Network Preparation (Table continued)

Description		Status	See	Comments
	(if applicable) SmartConsole site name, hostname and IP address defined and tested			

Network Definition Details					
Item	Hostname	IP	Wired (Y/N)	DICOM Port	AE Title
NM Acquisition Station					
Processing host					
Hardcopy host					
LAN Net Mask					
Gateway to other networks					
SmartConsole (if applicable)					

Table A-6 Radioactive Isotopes for System Calibration

Description		Status	See	Comments
Basic calibration	Site has license for Tc^{99m}			
	Tc^{99m} will be available during installation			
Isotopes to be used at site are available for installation. Specify age and strength of source in Comments.	Co^{57} (Line Source)			

Appendix B Measuring Floor Flatness

The floor must meet strict flatness specifications. The information in this appendix is provided as a tool for accurate measurement of the floor flatness.

Required Tools

- Self-leveling fan beam laser tool (self-leveling for at least 3 degrees)
- Masking tape
- Chalk line
- 1 m (3') level with minimum 1 mm (1/16") gradations (alternatively, use a tape measure securely taped to a spirit level)

1. Map the floor as follows:

NOTE
In the following graphic:

The "interest area" that needs to be checked (marked with two green X markers in the diagram) differs depending on the system type. This example demonstrates the area for 870 and D670 systems.

The "interest area" for table installation is indicated by the two green X marks.

Maximum height of laser: 10 cm (4")

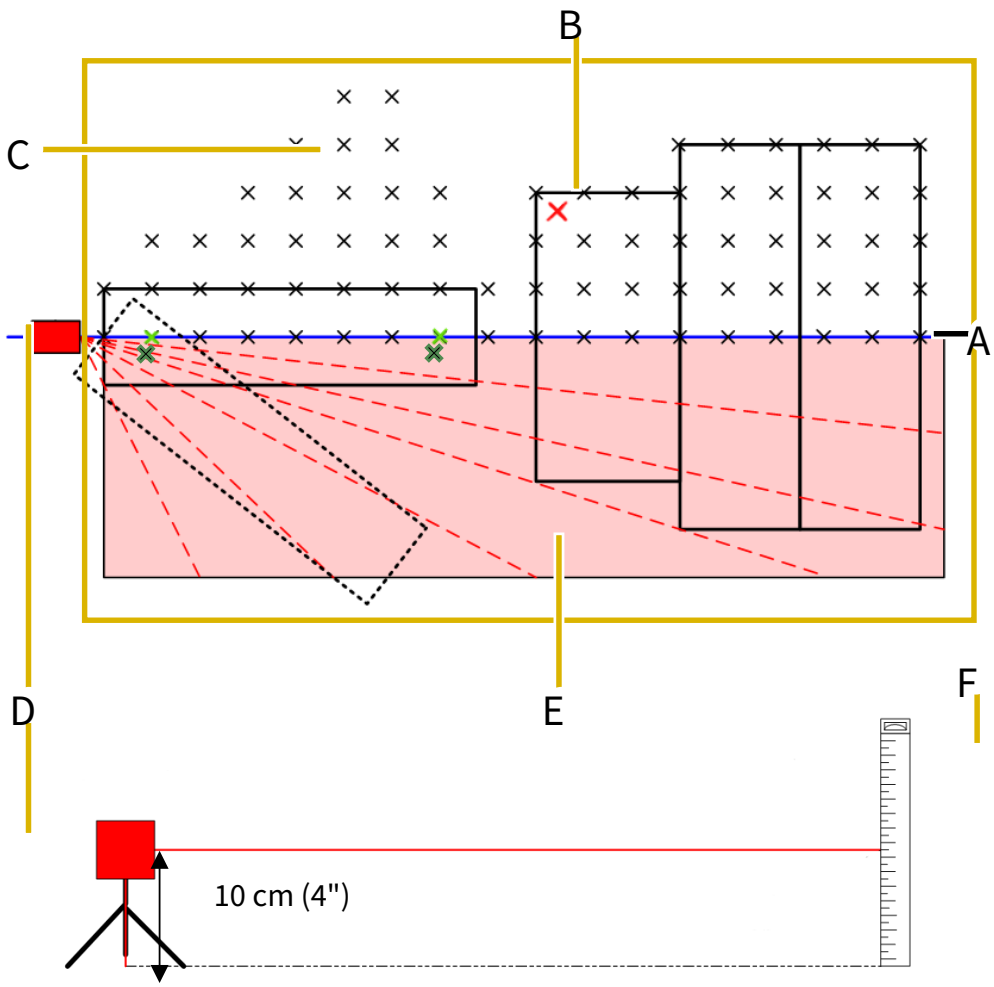

2. Place the laser (D) at the end of the center line.

   The laser must be high enough for the fan beam to be visible over the entire footprint area (E), but no more than 10 cm (4") high (the closer to the floor the more accurate).

   2.1. Using a chalk line, mark the center line (A) (refer to site drawings or proposal for exact location).

   2.2. Using masking tape, place × marks at 30 cm (1 ft) intervals along the center line.

2.3. Add × marks at 30 cm (1 ft) intervals from center line, so that the system footprint is covered with a grid of × marks (C).

2.4. Place the level flat on the floor and move it around the footprint area. Visually inspect the floor for any significant highs/lows, and add × marks (B) to identify them.

3. Keeping the measuring stick (F) exactly perpendicular to the floor, at each tape mark record the height at which the laser hits the ruler.

4. Record the measurements in a table that represents the system footprint. Add notes for any significant high/low measurements found in between the grid locations.

The table provides a visual contour of the floor, where each cell in the grid represents 30 cm (1 ft). Compare to the system specifications to determine whether the floor meets the requirements.

Table B-1 Floor Flatness Conforming with 0.5 cm over 150 cm Specs (0.5 Deviation) on page 107 shows a floor that meets the specification of 0.5 cm over 150 cm: there is no deviation greater than 0.5 between any 5 cells in the grid.
Table B-2 Floor Flatness Outside 0.5 cm over 150 cm Specs (1.1 Deviation) on page 108 shows a floor with three areas out of specification.

Table B-1 Floor Flatness Conforming with 0.5 cm over 150 cm Specs (0.5 Deviation)

Measurements in CM					Center						Notes
	1.3	1.2	1.1	1.1	1	1.1	0.9	0.9	1		Greatest Deviation: 1.4 - 0.9 = 0.5
	1.2	1.1	1.1	1.1	1	1	1	0.9	1		
	1.2	1	1	1	1	1	1	1	1		
	1.1	1	1	1	1	1	1.1	1.1	1.1		
	1	1	1	1	1	1	1.1	1.2	1.2		
	1	1	1	1	1	1	1.2	1.2	1.3		
	1.1	1.1	1.1	1	1	1.1	1.2	1.3	1.3		
		1.1	1.1	1.1	1.1	1.1	1.2	1.3			
		1.2	1.2	1.1	1.1	1.1	1.2	1.2			
		1.2	1.2	1.2	1.1	1.1	1.2	1.2			
				1.2	1.2	1.2					
		1.2	1.2	1.2	1.2	1.2	1.2	1.2			
1.3	1.3	1.2	1.2	1.2	1.3	1.3	1.2	1.2	1.1	1	
1.3	1.3	1.2	1.2	1.2	1.3	1.3	1.2	1.2	1.1	1	
	1.2	1.2	1.2	1.3	1.3	1.3	1.3	1.3	1.1		

Table B-1 Floor Flatness Conforming with 0.5 cm over 150 cm Specs (0.5 Deviation) (Table continued)

Measurements in CM					Center						Notes
		1.2	1.3	1.3	1.3	1.3	1.3	1.3			
			1.3	1.4	1.3	1.3	1.3				
				1.4	1.4	1.3					

Table B-2 Floor Flatness Outside 0.5 cm over 150 cm Specs (1.1 Deviation)

Measurements in CM					Center						Notes
	5.2	5.3	5.4	5.4	5.4	5.4	5.4	5.4	5.5		Greatest Deviation: 5.9 - 4.8 = 1.1
	5.3	5.4	5.4	5.3	5.4	5.4	5.4	5.4	5.4		
	5.4	5.4	5.3	5.2	5.2	5.3	5.1	5.3	5.4		
	5.3	5.3	5.2	5.1	5.1	5.2	5	5.3	5.6		
	5.4	5.4	5.4	5.2	5	5.1	5.2	5.2	5.3		
	5.3	5.3	5.3	5.1	5	5	5.1	5.2	5.2		
		5.1	5.1	5	5	5.1	5.3	5.3			
		5	5	5.1	5.1	5.3	5.4	5.6			
		4.8	4.9	5.1	5.2	5.4	5.6	5.9			
				5.1	5.2	5.3					
		5.1	5.2	5.2	5.2	5.3	5.4	5.5			High spot between orange blocks = 4.8
5.1	5.1	5.1	5.2	5.2	5.3	5.3	5.5	5.6	5.8	5.9	
5	5.1	5.2	5.2	5.3	5.4	5.4	5.5	5.6	5.8	5.9	
	5.2	5.2	5.3	5.4	5.5	5.5	5.6	5.6	5.7		
		5.3	5.4	5.5	5.6	5.6	5.6	5.7			
			5.5	5.6	5.7	5.6	5.7				
				5.7	5.8	5.7					
	5.2	5.3	5.4	5.4	5.4	5.4	5.4	5.4	5.5		

Table B-3 Blank Table for Measurements

Measurements in CM					Center						Notes
											Greatest Deviation:

Table B-3 Blank Table for Measurements (Table continued)

Measurements in CM					Center						Notes

Appendix C EMC Compliance

This equipment complies with IEC60601-1-2 Edition 4 EMC Standard for medical electrical equipment.

The system is suitable to be used in an electromagnetic environment, in compliance with the limits and recommendations provided in the following tables:

- Emission compliance level and limits
- Immunity compliance level and recommendations to maintain equipment clinical utility

Table C-1 EMC Emission Declaration

Emissions Test	Compliance	Electromagnetic Environment Guidance
RF emissions CISPR 11	Group 1	The system uses RF energy only for its internal function. Therefore, its RF emissions are very low and are not likely to cause any interference in nearby electronic equipment.
RF emissions CISPR 11	Class A	
Harmonic emissions IEC 61000-3-2	NA	The system is suitable for use in all establishments other than domestic and those directly connected to the public low-voltage power supply network that supplies buildings used for domestic purposes.
Voltage fluctuations/flicker emissions IEC 61000-3-2	NA	

Table C-2 Immunity Guidance and Declaration

Immunity Test	EC 60601-1-2 Test Level	Compliance Level	Electromagnetic Environment Guidance
Electrostatic discharge (ESD) IEC 61000-4-2	±6 kV contact ±8 kV air ±8 kV contact ±15 kV air	[Edition 2 and 3] • ±6 kV contact ±8 kV air [Edition 4] • ±8 kV contact • ±15 kV air	Floors should be wood, concrete, or ceramic tile. If floors are covered with synthetic material, the relative humidity should be at least 30%.

Table C-2 Immunity Guidance and Declaration (Table continued)

Immunity Test	EC 60601-1-2 Test Level	Compliance Level	Electromagnetic Environment Guidance
Electrical fast transient/burst IEC 61000-4-4	±2 kV for power supply lines 100 KHz rate ± 1 kV for input/ output lines 100 KHz rate	[Edition 2 and 3] • ±2 kV for power supply lines, 100 KHz rate • ±1 kV for input/ output lines, 100 KHz [Edition 4] • ±2 kV for power supply lines, 100 KHz rate • ±1 kV for input/ output lines, 100 KHz rate	Mains power quality should be a typical commercial or hospital environment.
Surge IEC 61000-4-5	±1 kV line-line ±2 kV line-earth	[Edition 2,3, and 4] • ±1 kV line-line • ±2 kV line-earth	Mains power quality should be a typical commercial or hospital environment.
Voltage dips, short interruptions and voltage variations on power supply input lines IEC 61000-4-11	0% UT for 5 sec	[Edition 2 and 3] • < 5 % UT (>95% dip in UT) for 5 sec [Edition 4] • 0% UT for 5 sec	Mains power quality should be a typical commercial or hospital environment. If the user of the system requires continued operation during power mains interruptions, it is recommended that the system is powered from an uninterruptible power supply or a battery.
Power frequency (50/60 Hz) magnetic field IEC 61000-4-8	3 A/m 30 A/m	[Edition 2 and 3] • 3 A/m [Edition 4] • 30 A/m	Power frequency magnetic fields should be at levels characteristic of a typical location in a typical commercial or hospital environment.
NOTE UT equals the alternating current mains voltage prior to application of the test level.			

Table C-2 Immunity Guidance and Declaration (Table continued)

Immunity Test	EC 60601-1-2 Test Level	Compliance Level	Electromagnetic Environment Guidance
Conducted RF IEC 61000-4-6	3 Vrms 150 kHz to 80 MHz 6 Vrms in ISM bands 150 kHz to 80 Mhz	[Edition 2, 3, and 4] • 3 Vrms • 150 kHz to 80 MHz [Edition 4] • 6 Vrms in ISM bands • 150 kHz to 80 Mhz	Do not use portable and mobile RF communications equipment closer to any part of the system, including cables, than the recommended separation distance (d) calculated from the equation appropriate for the frequency of the transmitter. Recommended Separation Distance (d): $d = \left[\frac{3.5}{3}\right]\sqrt{P}$ See Table C-4, where P is the maximum output power rating of the transmitter in watts (W), according to the transmitter manufacturer and d is the recommended separation distance in meters (m) . Field strengths from fixed RF transmitters, as determined by an electromagnetic site survey[*1], should be less than the compliance level in each frequency range.[*2] Interference may occur in the vicinity of equipment marked with the following symbol:

Table C-2 Immunity Guidance and Declaration (Table continued)

Immunity Test	EC 60601-1-2 Test Level	Compliance Level	Electromagnetic Environment Guidance
Radiated RF Fields / Proximity Fields from Wireless Transmitters IEC 61000-4-3	3 V/m 80 MHz to 2.7 GHz 80% AM 1 kHz 9V/m to 28 V/m Spot frequencies 385 / 450 / 710 / 745 / 780 / 810 / 870 / 930 / 1720 / 1845 / 1970 / 2450 / 5240 / 5500 / 5785 MHz PM 18 Hz or 217 Hz (50% duty cycle) See Table C-4 for details.	[Edition 2 and 3] • 3 V/m • 80 MHz to 2.5GHz • 80%AM 1 kHz [Edition 4] • 3 V/m • 80 MHz - 2.7 GHz • 80%AM 1 kHz [Edition 4] • 9 V/m to 28 V/m • spot frequencies 385 / 450 / 710 / 745 / 780 / 810 / 870 / 930 / 1720 / 1845 / 1970 / 2450 / 5240 / 5500 / 5785 MHz • PM 18 Hz or 217 Hz • (50% duty cycle) See Table C-4 for details.	Do not use portable and mobile RF communications equipment closer to any part of the system, including cables, than the recommended separation distance (d) calculated from the equation appropriate for the frequency of the transmitter. Recommended Separation Distance (d): $d = \left[\frac{3.5}{3}\right]\sqrt{P}$ $d = \left[\frac{7}{3}\right]\sqrt{P}$ See Table C-4 , where P is the maximum output power rating of the transmitter in watts (W), according to the transmitter manufacturer and d is the recommended separation distance in meters (m) . Field strengths from fixed RF transmitters, as determined by an electromagnetic site survey, should be less than the compliance level in each frequency range.*2 Interference may occur in the vicinity of equipment marked with the following symbol:

*1 Field strengths from fixed transmitters, such as base stations for radio (cellular/cordless) telephones and land mobile radios, amateur radio, AM and FM radio broadcast, and TV broadcast cannot be predicted theoretically with accuracy .To assess the electromagnetic environment due to fixed RF transmitters ,an electromagnetic site survey should be considered. If the measured field strength in the location in which the system is used exceeds the applicable RF compliance level above, the system should be observed to verify normal operation. If abnormal performance is observed, additional measures may be necessary, such as reorienting or relocating the system.

*2 Over the frequency range 150 kHz to 80 MHz, field strengths should be less than 3V/m.

Table C-3 Spot Frequencies

Spot Frequency (Mhz)	Band (Mhz)	Service	Maximum Power (Watts)
385	380-390	TETRA 400	1,8
450	430-470	GMRS 460 FRS 460	2,0
710	704-787	LTE Band 13, 17	2
745			
780			
810	800-960	GSM 800/900 TETRA 800 IDEN 820 CDMA 850 LTE Band 5	2
870			
930			
1720	1700-1990	GSM 1800 CDMA 1900 GSM 1900 DECT LTE Band 1, 3, 4, 25 UTMS	2
1845			
1970			
2450	2400-2570	Bluetooth WLAN 802.11 b/g/n RFID 2450 LTE Band 7	2
5240	5100-5800	WLAN 802.11 a/n	0,2
5300			
5785			

Table C-4 Separation Distances for Portable and Mobile RF Communications Equipment

Rated Max Output Power (P) of Transmitter (Watts)	Separation distance according to frequency of transmitter (meters)			Comments
	150 kHz to 80 MHz $d = \left[\frac{3.5}{3}\right]\sqrt{P}$	80 MHz to 800 MHz $d = \left[\frac{3.5}{3}\right]\sqrt{P}$	800 MHz to 2.7 GHz $d = \left[\frac{7}{3}\right]\sqrt{P}$	Where **P** is the maximum output power rating of the transmitter in watts (W) according to the transmitter manufacturer and **d** is the recommended separation distance in meters (m). Field strengths from fixed RF transmitters, as determined by an electromagnetic site survey[*1], should be less than the compliance level in each frequency range.[*2] Interference may occur in the vicinity of equipment marked accordingly.
0.01	0.12	0.12	0.23	
0.1	0.37	0.37	0.74	
1	1.17	1.17	2.33	
10	3.69	3.69	7.38	
100	11.7	11.7	23.3	

[*1] Field strengths from fixed transmitters, such as base stations for radio (cellular/cordless) telephones and land mobile radios, amateur radio, AM and FM radio broadcast, and TV broadcast cannot be predicted theoretically with accuracy. To assess the electromagnetic environment due to fixed RF transmitters, and electromagnetic site survey should be considered. If the measured field strength in the location in which the system is used exceeds the applicable RF compliance level above, the system should be observed to verify normal operation. If abnormal performance is observed, additional measures may be necessary, such as re-orienting or relocation the system.

[*2] Over the frequency range 150 kHz to 80 MHz, field strengths should be less than 3 V/m.

For transmitters rated at a maximum output power not listed above, the separation distance can be estimated using the equation in the corresponding column, where power (P) is the maximum output power rating of the transmitter in watts (W) according to the transmitter manufacturer.

NOTE

- At 80 MHz to 800 MHz, the separation distance for the higher frequency range applies.
- These guidelines may not apply in all situations. Electromagnetic propagation is affected by absorption and reflection from structures, objects, and people. As an example, keep a 1 W mobile phone (800 MHz to 2.7 GHz carrier frequency) at least 2.3 m from the NM/CT system (to avoid image interference risks).

Limitations Management: Adhering to the distance separation recommended in (150 KHz to 2.7 GHz) reduces disturbances recorded at the image level, but may not eliminate all disturbances. However, when installed and operated as specified, the system maintains its essential performance by continuing to acquire, display, and store diagnostic quality images safely.

Table C-5 Electromagnetic Compliance

Emissions Test	Compliance	Electromagnetic Environment Guidance
RF emissions CISPR 11	Group 1	The system uses RF energy only for its internal function. Therefore, its RF emissions are very low and not likely to cause interference in nearby electronic equipment.
RF emissions CISPR 11	Class A	When installed in such a shielded location, the scanner is suitable for use in all establishments other than domestic, and those directly connected to the public low-voltage power supply network that supplies buildings used for domestic purposes.
Harmonic emissions IEC 61000-3-2	N/A	N/A
Voltage fluctuation/ flicker emissions IEC 61000-3-2	N/A	N/A

Appendix D Regulatory Clearances

MINIMUM CLEARANCES UNDER U.S. FEDERAL REGULATIONS AND NATIONAL STANDARDS: 29 CFR 1910 (OSHA), NFPA 70E (STANDARD FOR ELECTRICAL SAFETY IN THE WORKPLACE), AND NFPA 101 (LIFE SAFETY CODE):

is a map of clearance requirements for U.S. regulatory compliance. See clearance tables on the following pages for detailed dimensional clearances. Please note all systems installed in the United States must comply with all Federal and local regulations. For installations outside the United States, country-specific or other local regulatory clearance requirements must be met. See D.5 Service Clearances on page 121 for additional information.

D.1 Regulatory Code Description

Egress: 29 CFR 1910 Subpart E (OSHA) and NFPA 101 (Life Safety Code) define the minimum requirements for means of egress. The requirement most applicable to equipment installation and room layout is minimum width of exit access. Under OSHA 1910.37(f)(6), the minimum width of exit access shall in no case be less than 28 in. from any potentially occupied point in the room.

Under NFPA 101 (2006 edition) 7.3.4.1, the minimum width of any means of egress is 36 in. However, NFPA allows this to be reduced to 28 in. around furniture or equipment, provided that a 36 in. clearance would otherwise be available without moving permanent walls.

Electrical Clearance: 29 CFR 1910 Subpart S (OSHA) and NFPA 70E (Standard for Electrical Safety in the Workplace) define minimum clearance requirements for the workspace around electrical equipment. Under both OSHA 1910.303(g)(1) and NFPA 70E (2004 edition) 400.15, a minimum clear space of 36" depth (with minimum 30" width and 78" height) must be provided in front of electrical equipment with parts operating at 600 volts or below and likely to require examination, adjustment, servicing, or maintenance while energized.

This safety clearance requirement applies to all GEHC equipment. Although 36 in. is the minimum clearance for most installations, the standards require an increased minimum clearance distance where parts operate above 150 volts (but still below 600 volts) under the following circumstances:

- If the wall or surface directly facing the electrical equipment is grounded (for example: brick, concrete, or tile) or includes grounded protrusions (such as medical gas ports, metal door or window frames, water sources and metallic sink structures, metallic cabinetry, electrical disconnects or emergency off panels, air conditioners or vents), then a 42" clearance depth is required.
- If the possibility exists of exposed and unguarded live parts on both sides of the workspace (for example if a power distribution unit were positioned on the wall directly facing the GEHC equipment), then a 48" clearance depth is required.

D.2 Regulated Minimum Working Clearance by Major Subsystem

Requirements apply to equipment operating at 600V or less, where examination, adjustment, servicing, or maintenance is likely to be performed while live parts are exposed.

Direction of Service Access is defined as perpendicular to the surface of the equipment being serviced. Required regulatory clearance distances must be maintained and may not be used for storage. This includes normal system operation as well as service inspection or maintenance.

For the gantry and table, distances are measured from the enclosure, not the finish covers.

Table D-1 Gantry Subsystem

Work Space Requirement	Minimum Clear Space	Additional Conditions
Direction of service access (all sides)		If exposed live parts of 151 - 600 volts are present, 1219 mm (48 in.) on both sides of workspace with the operator between is required. If the opposite wall is grounded and exposed live parts of 151-600 volts are present, 1067 mm (42 in.) is required.
Service access width (left-right of workspace)	762 mm (30")	This is the width of the working space in front of the equipment. A minimum of 762 mm (30 in.) or the width of the equipment, whichever is greater, is required.

Table D-2 UPS Subsystem

Work Space Requirement	Minimum Clear Space	Additional Conditions
Direction of service access (front of UPS)	914.4 mm (36")*	There are no exposed live part hazards with the cover in place. This component is typically serviced from the front with access to the rear. • If exposed live parts of 151 - 600 volts are present, 1219 mm (48 in.) is required on both sides of the workspace with the operator between. • If the opposite wall is grounded and exposed live parts of 151 - 600 volts are present, 1067 mm (42 in.) is required.
Service access width (right side and length of UPS)	762 mm (30")	This is the width of the working space in front of the equipment. A minimum of 762 mm (30 in.) or the width of the equipment, whichever is greater, is required
Head clearance	1981 mm (78")	This is the height of the workspace measured from the floor at the front edge of the equipment to the ceiling or overhead obstruction(s). A minimum of 1981 mm (78 in.) or the height of the equipment, whichever is greater, is required.

Table D-3 MDP (A1) Disconnect Subsystem

Work Space Requirement	Minimum Clear Space	Additional Conditions
Direction of service access (front of MDP/A1)	914.4 mm (36")*	There are no exposed live part hazards with the cover in place. This component is typically serviced from the front with access to the rear. • If exposed live parts of 151 - 600 volts are present, 1219 mm (48 in.) is required on both sides of the workspace with the operator between. • If the opposite wall is grounded and exposed live parts of 151 - 600 volts are present, 1067 mm (42 in.) is required.
Service access width (right side and length of MDP/A1)	762 mm (30")	This is the width of the working space in front of the equipment. A minimum of 762 mm (30 in.) or the width of the equipment, whichever is greater, is required.
Head clearance	1981 mm (78")	This is the height of the workspace measured from the floor at the front edge of the equipment to the ceiling or overhead obstruction(s). A minimum of 1981 mm (78 in.) or the height of the equipment, whichever is greater, is required.

D.3 Terms and Definitions

Egress: The path of exit from within any room, constituting a continuous and unobstructed space, without trip hazards along the path of exit.

Workspace: The dimensional box required for safe inspection or service of energized equipment. It consists of depth, width, and height. The depth dimension is measured perpendicular to the direction of access. Additional conditions can increase the minimum dimension requirement. GE defines this as the envelope of the component superstructure with the external covers in place.

Service Access Width: The width of the workspace in front of the equipment. A minimum of 762 mm (30"), or the width of the equipment, whichever is greater.

Head Clearance: The height dimension of the workspace. The height of the workspace measured from the floor at the front edge of the equipment to the ceiling or overhead obstruction(s). 1981.2 mm (78"), or the height of the equipment, whichever is greater.

Grounded Wall: Any wall that can be electrically conductive to earth ground. Masonry, concrete, and tile are considered conductive. Additional commonly found aspects of a wall should also be considered grounded.

The following is not an all-inclusive list:

• Medical gas ports and plates • Metal doors and window frames • Water sources and metallic sink structures • Metallic wall-mounted cabinetry • MDP (A1) • Equipment Emergency OFF panels • Industrial equipment (such as air conditioners and vents) • Expansion joints • Surface raceway • Exposed wall conduits • Floor outlets boxes	The following are not considered as grounded elements of a common wall: • Standard wall outlet • Light switches • Telephones • Communication wall jacks • Ceiling tile grids

D.4 Additional Regulatory Clearance Information

D.4.1 Regulatory Caution

Site prints are required for all system installations including relocation and moves. The room layout, as shown on your site print, shall meet all regulatory requirements as described in the installation manual. Additional room components, such as cabinets, reduce room size. Equipment not shown on the site print may void the caution statement, making the room non-compliant. Actual site measurements before installation will be taken to determine room size and compliance.

D.4.2 Egress Clearance

Egress requires a clear, unobstructed route out of the room.

Exceptions: Small rooms require construction to meet the minimum requirements. The design center or your GE PMI may have additional recommendations for your room size.

D.5 Service Clearances

Servicing of the system can be safely performed within the regulatory envelopes defined in Appendix D Regulatory Clearances on page 118; however sufficient space must be maintained to remove the covers from the system.

To achieve this clearance for the gantry, clear space must be available to maneuver the gantry rear covers mounted on the service dollies. One Service Engineer can accomplish this.

Appendix E System Interconnect Diagrams

Figure E-1 System Interconnect Diagram (HP Z4 Standalone)

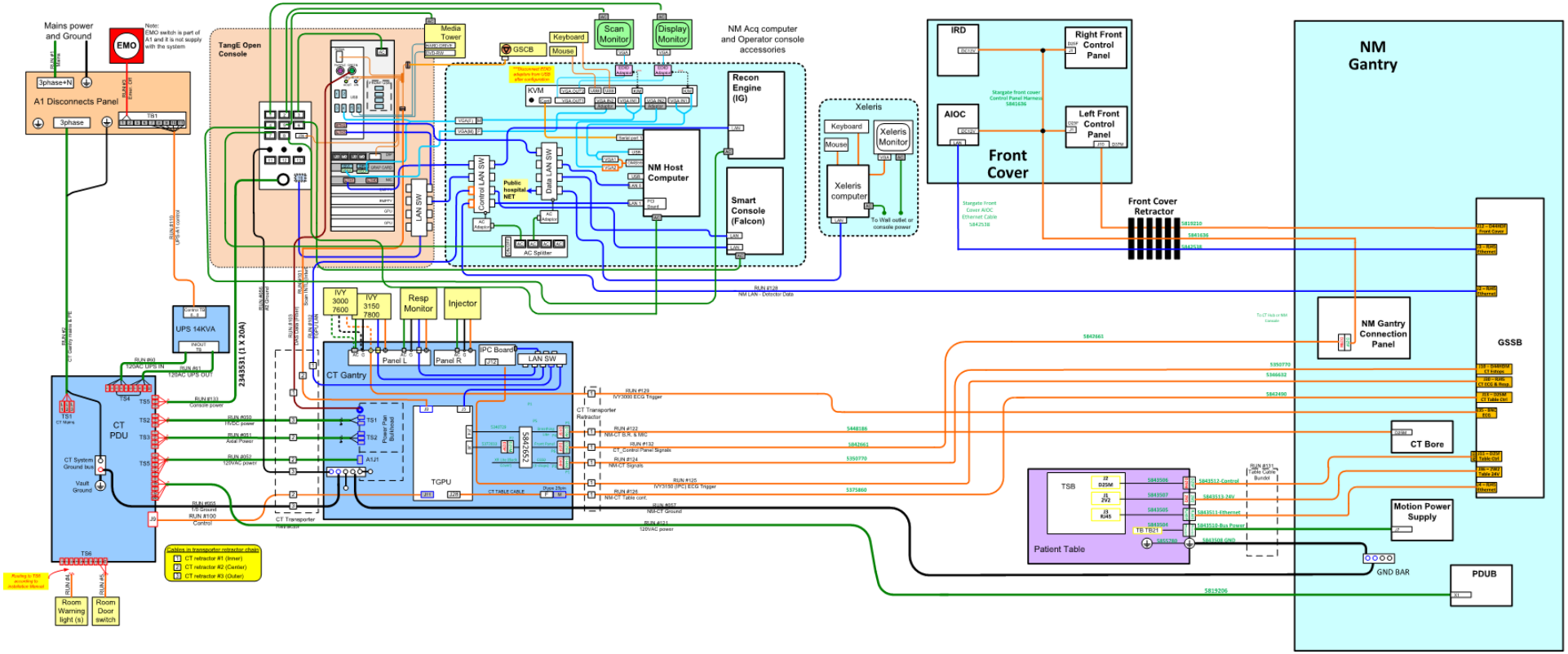

Figure E-2 System Interconnect Diagram (HP Z4 Common PC)

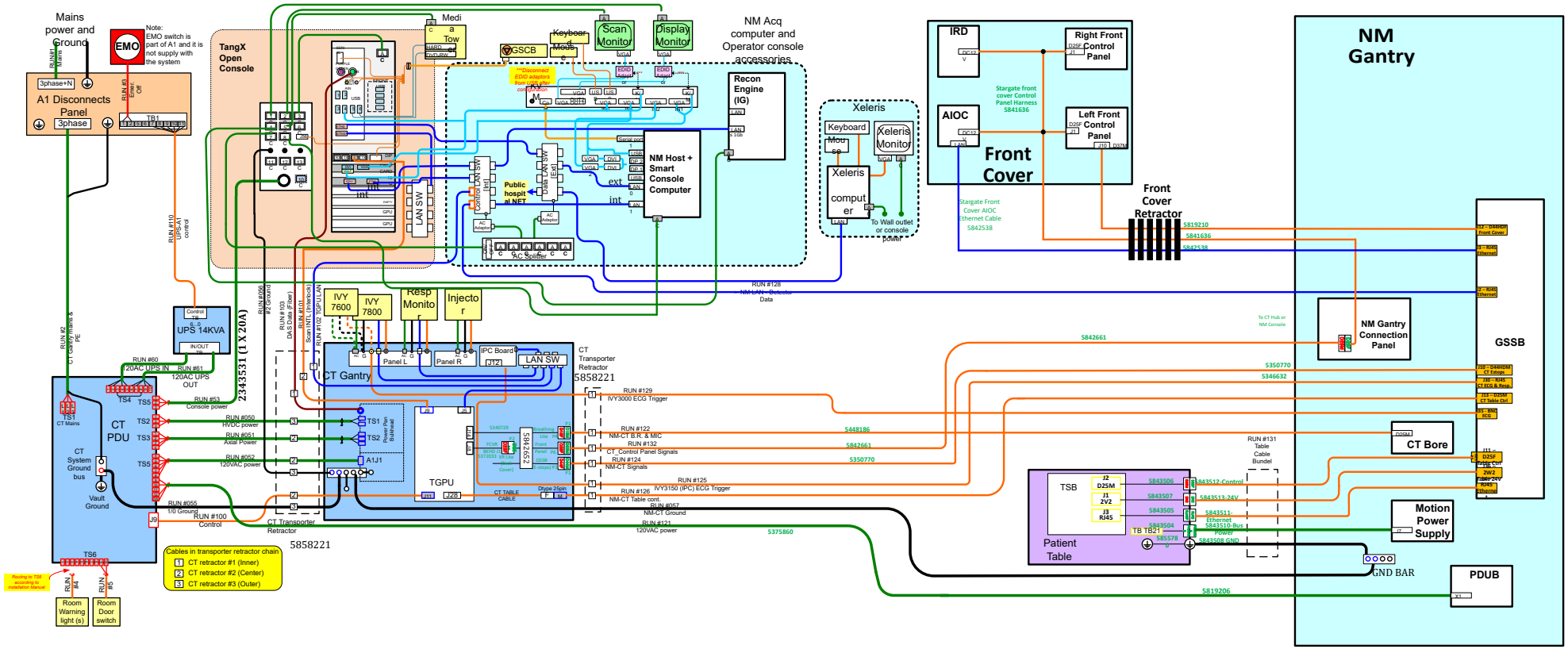

GE HealthCare

www.gehealthcare.com